DRAWING NUMBER	REVISION	CUSTOMER NUMBER	REVISION
750-00208-02	C	N/A	

IF IN DOUBT ASK

REVISION HISTORY

ECO No.	REV.	DESCRIPTION.	DATE.	APPROVED.
1504	A	INITIAL RELEASE	14/3/03	PL
1528	B	NEW ADDITION / CUSTOMER REQUEST	8/8/03	P L
1804	C	DETACHABLE LATCHING KIT	26/1/06	GE
1897	D	P10 GUARD CHANGE	5/1/07	GE

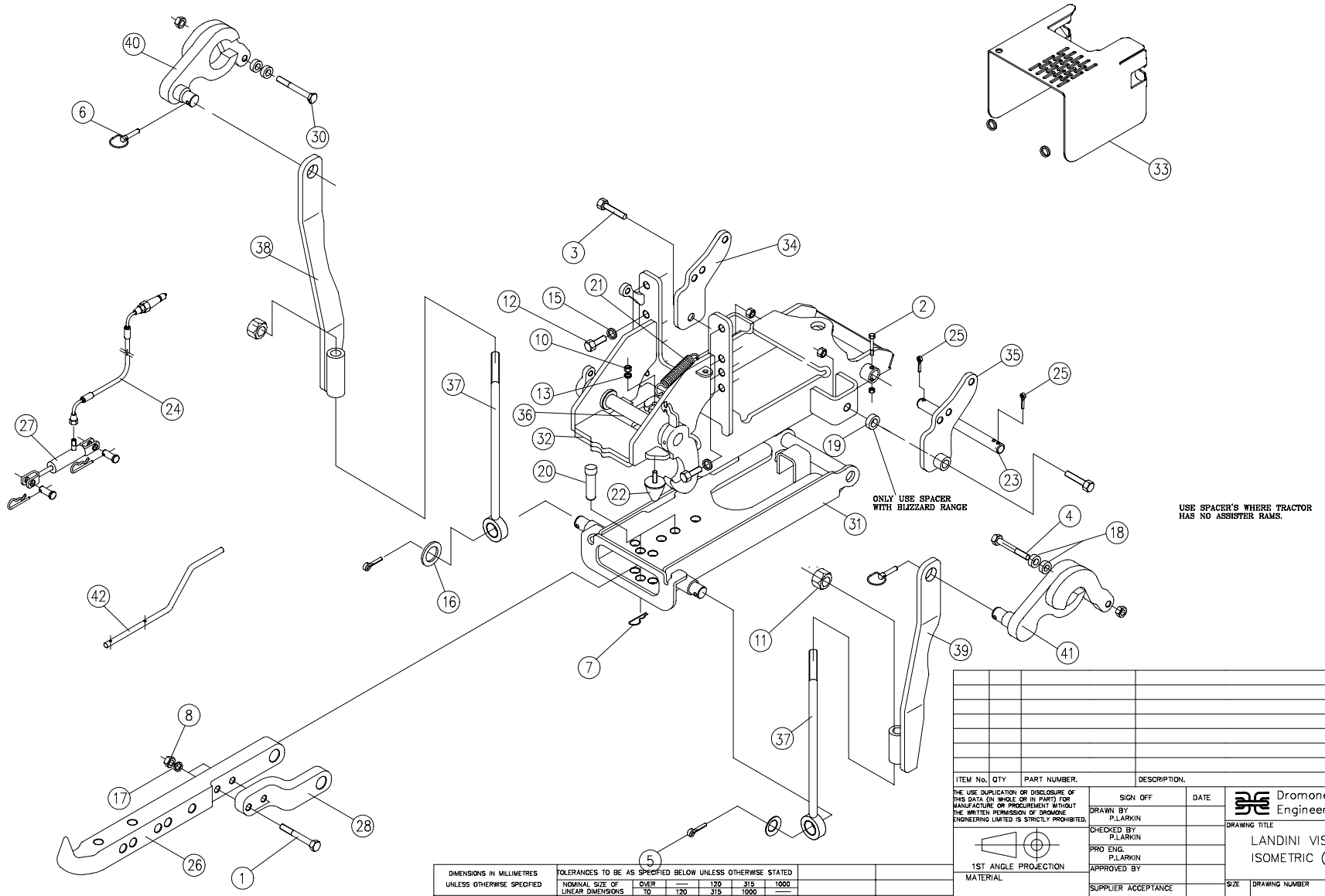

ITEM No.	QTY	PART NUMBER.	DESCRIPTION.	REMARKS.

THE USE DUPLICATION OR DISCLOSURE OF THIS DATA (IN WHOLE OR IN PART) FOR MANUFACTURE OR PROCUREMENT WITHOUT THE WRITTEN PERMISSION OF DROMONE ENGINEERING LIMITED IS STRICTLY PROHIBITED.

1ST ANGLE PROJECTION

MATERIAL

FINISH

SIGN OFF	DATE
DRAWN BY P.LARKIN	
CHECKED BY P.LARKIN	
PRO ENG. P.LARKIN	
APPROVED BY	
SUPPLIER ACCEPTANCE	
APPROVED BY CUSTOMER	

Dromone Engineering Ltd
Dromone, Oldcastle, Co. Meath Ireland.
Telephone: 353-044-66346.
Fax: 353-044-66236.

DRAWING TITLE
LANDINI VISION STD (UK)
ISOMETRIC (mousetrap)

SIZE | DRAWING NUMBER: 750-00208-02

SCALE N/A | REV LETTER C | SHEET 1 OF 2

DIMENSIONS IN MILLIMETRES UNLESS OTHERWISE SPECIFIED	TOLERANCES TO BE AS SPECIFIED BELOW UNLESS OTHERWISE STATED					
	NOMINAL SIZE OF LINEAR DIMENSIONS	OVER	—	120	315	1000
		TO	120	315	1000	—
DRAWING AND TOLERANCING TO BS 308: PARTS 1 & 2 & 3.	0 OR 1 DECIMAL PLACES		±0.6	±1.2	±2.0	±3.0
	2 DECIMAL PLACES		±0.25			
	ANGULAR TOLERANCE		±0° 30'			

NEXT ASSY. | USED ON. APPLICATION.