Code	Description	Notes
C02_1_11890	ENGINE AND RADIATOR (MT103/MT104)	
C02_2_11937	ENGINE AND RADIATOR (MT103/MT104)	
C02_3_11984	ENGINE AND RADIATOR (MT 103/MT104/MT205)	
C02_4_46431	ENGINE AND RADIATOR (MT 103/MT104/MT205)	
C02_5_59797	ENGINE AND RADIATOR (MT 103/MT104/MT205)	
C02_6_62131	ENGINE AND RADIATOR (MT 103/MT104/MT205)	
C03_0_12031	FUEL TANK	
C03_1_46480	FUEL TANK	
C03_2_62837	FUEL TANK	
E01_1_12143	HYDROSTATIC TRANSMISSION (MT 103-MT104)	
E01_2_12187	HYDROSTATIC TRANSMISSION (MT 103-MT104-MT205)	
E01_3_12231	HYDROSTATIC TRANSMISSION (MT 103-MT104-MT205)	
E01_4_46530	HYDROSTATIC TRANSMISSION (MT 103-104-205)	
E01_5_59845	HYDROSTATIC TRANSMISSION (MT 103-104-205)	
F02_1_12492	GEARBOX (MT103-MT104)	
F02_2_12541	GEARBOX (MT103-MT104-MT205)	
F02_3_46576	GEARBOX (MT103-MT104-MT205)	
F04_1_12713	GEARS (MT103-MT104)	
F04_2_12755	GEARS (MT103-MT104-MT205)	
G02_1_12960	LEFT AXLE AND DIFFERENTIAL (MT103-MT104)	
G02_2_13003	LEFT AXLE AND DIFFERENTIAL (MT103-MT104-MT205)	
G02_3_62856	LEFT AXLE AND DIFFERENTIAL (MT103-MT104-MT205)	
G03_0_13046	RIGHT AXLE	
G03_1_13081	RIGHT AXLE	
G03_2_13121	RIGHT AXLE	
G03_3_13161	RIGHT AXLE	
G03_4_62900	RIGHT AXLE	
H01_0_13201	STEERING UNIT	
H01_1_13238	STEERING UNIT	
H01_2_13281	STEERING UNIT	
H01_3_13325	STEERING UNIT	
H01_4_13369	STEERING UNIT (MT100-MT101-MT104)	
I02_1_13683	FRONT FRAME (MT103-MT104)	
I02_2_13732	FRONT FRAME (MT103-MT104)	

Code	Description	Notes
I02_3_13782	FRONT FRAME (103-104-205)	
I02_4_66089	FRONT FRAME (103-104-205)	
I04_1_14087	CONTROLS (MT103 - MT104)	
I04_2_14141	CONTROLS (MT103 - MT104)	
I04_3_14195	CONTROLS (MT103 - MT104 -MT205)	
I05_1_14303	CONTROLS (MT103 - MT104)	
I05_2_14357	CONTROLS (MT103 - MT104 -MT205)	
I05_3_46627	CONTROLS (MT103 - MT104 -MT205)	
J04_0_14778	SEAT SUPPORT (MT 104)	
J04_1_14804	SEAT SUPPORT (MT 104)	
J04_2_14832	SEAT SUPPORT (MT 104)	
J04_3_46864	SEAT SUPPORT (MT 104)	
J04_4_46895	SEAT SUPPORT (MT 104)	
K01_1_14895	FRAME AND PROTECTIONS(MT100-104)	
K01_2_14934	FRAME AND PROTECTIONS(MT100-104)	
K07_0_15404	PROTECTIONS (MT 104)	
K07_1_92872	PROTECTIONS (MT 104)	
L02_1_15648	PTO CONTROL (MT 100 - MT104)	
L02_2_15693	PTO CONTROL (MT 100 - MT104)	
L02_3_47040	PTO CONTROL (MT 100 - MT104)	
L02_4_74201	PTO CONTROL (MT 100 - MT104)	
L04_1_15925	PTO TRANSMISSION (MT100-MT104)	
L04_2_15950	PTO TRANSMISSION (MT100-MT104)	
L04_3_47148	PTO TRANSMISSION (MT100-MT104)	
L04_4_47178	PTO TRANSMISSION (MT100-MT104)	
L04_5_59893	PTO TRANSMISSION (MT100-MT104)	
M07_0_16791	LOADING LEVEL (MT 104)	
M07_1_16810	LOADING LEVEL (MT 104)	
M07_2_16828	LOADING LEVEL (MT 104)	
M07_3_16844	DUMPING BOX (MT104)	
M07_4_66261	DUMPING BOX (MT104)	
N01_0_16877	FRONT LIFT ARMS	
N01_1_16903	FRONT LIFT ARMS	
N01_2_16929	FRONT LIFT ARMS	

Code	Description	Notes
N01_3_47367	FRONT RAISING ARMS	
N01_4_60048	FRONT RAISING ARMS	
N01_5_93045	FRONT RAISING ARMS	
N02_0_16956	FRONT LIFT CYLINDER	
P01_0_16983	MOWER DECK TRANSMISSION (MT100)	
P01_1_17026	MOWER DECK TRANSMISSION (CM. 122; SIDE DISCHARGE)	
P01_2_17070	MOWER DECK TRANSMISSION (CM. 122; SIDE DISCHARGE)	
P03_0_17238	MOWER DECK WITH REAR DISCHARGE CM.122 (MT100)	
P03_1_17306	MOWER DECK WITH SIDE DISCHARGE CM. 122	
P03_2_17374	MOWER DECK WITH SIDE DISCHARGE CM. 122	
P03_3_17443	MOWER DECK WITH SIDE DISCHARGE CM. 122	
P03_4_17511	MOWER DECK WITH SIDE DISCHARGE CM. 122	
P03_5_47398	MOWER DECK WITH SIDE DISCHARGE CM. 122	
P03_6_66488	MOWER DECK WITH SIDE DISCHARGE CM. 122	
P03_7_93072	MOWER DECK WITH SIDE DISCHARGE CM. 122	
Q01_0_17866	REAR WHEELS	
Q01_1_17897	REAR WHEELS (MT100-MT101-MT104)	
Q01_2_17928	REAR WHEELS (MT100-MT101-MT104)	
R04_0_18561	HYDRAULIC SYSTEM DIAGRAM (MT104)	
R04_1_18609	HYDRAULIC SYSTEM DIAGRAM (MT104)	
R04_2_18657	HYDRAULIC SYSTEM DIAGRAM (MT104)	
R04_3_47661	HYDRAULIC SYSTEM DIAGRAM (MT104)	
R06_0_74311	QUICK COUPLIGNS	Version: MT 101, MT 103, MT 104, MT 205
R06_1_74344	QUICK COUPLIGNS	
R07_0_74377	HYDRAULIC DIAGRAMQUICK CONPLING (MT103-104-205)	
S01_0_18778	ELECTRIC SYSTEM WITHOUT LIGHTS	
S01_1_18793	ELECTRIC SYSTEM "BASIC"	
S01_2_18814	ELECTRIC SYSTEM "BASIC"	
S01_3_70359	ELECTRIC SYSTEM "BASIC"	
S02_0_18837	ELECTRIC DIAGRAM "BASIC"	
S02_1_66910	ELECTRIC DIAGRAM "BASIC"	
S03_0_18838	ELECTRIC SYSTEM WITH LIGHTS (MT100-MT101-MT103-MT104)	
S03_1_96314	ELECTRIC SYSTEM WITH LIGHTS (MT100-MT101-MT103-MT104)	
S05_0_18982	ELECTRIC DIAGRAM WITH LIGHTS	

Code	Description	Notes
T01_0_18983	ELECTRIC DIAGRAM WITHOUT LIGHTS	
T01_1_18984	LEGENDA FOR TABLES S01 - S02	
T01_2_47967	LEGENDA FOR TABLES S01 - S02	
T01_3_66911	LEGENDA FOR TABLES S01 - S02	
T02_0_19009	LEGENDA FOR TABLES S03 - S04 - S05	
T02_1_96390	LEGENDA FOR TABLES S03 - S04 - S05	
U01_0_19022	STICKERS	
U01_1_19034	STICKERS	
U01_2_47792	STICKERS	
U02_0_19053	STICKERS	
U02_1_19069	STICKERS	
V01_0_70914	TB 115	
V01_1_71121	TB 115	
V01_2_93424	TB 115	
V02_0_71046	TB 115	
W01_0_71055	TOS 150C	
W01_1_71268	TOS 150C	
W01_2_71344	TOS 150C	
W01_3_71429	TOS 150C	
W01_4_96528	TOS 150C	
W02_0_71514	TOS 150C	
W02_1_71530	TOS 150C	
W02_2_71546	TOS 150C	
W02_3_96404	TOS 150C	
W03_0_71562	TOS 150C	
W04_0_71572	TOS 150C	
W04_1_71607	TOS 150C	
C03_3_118077	FUEL TANK	
E01_6_118094	HYDROSTATIC TRANSMISSION (MT 103-104-205)	
F04_3_118141	GEARS (MT103-MT104-MT205)	
R04_4_118245	HYDRAULIC SYSTEM DIAGRAM (MT104)	

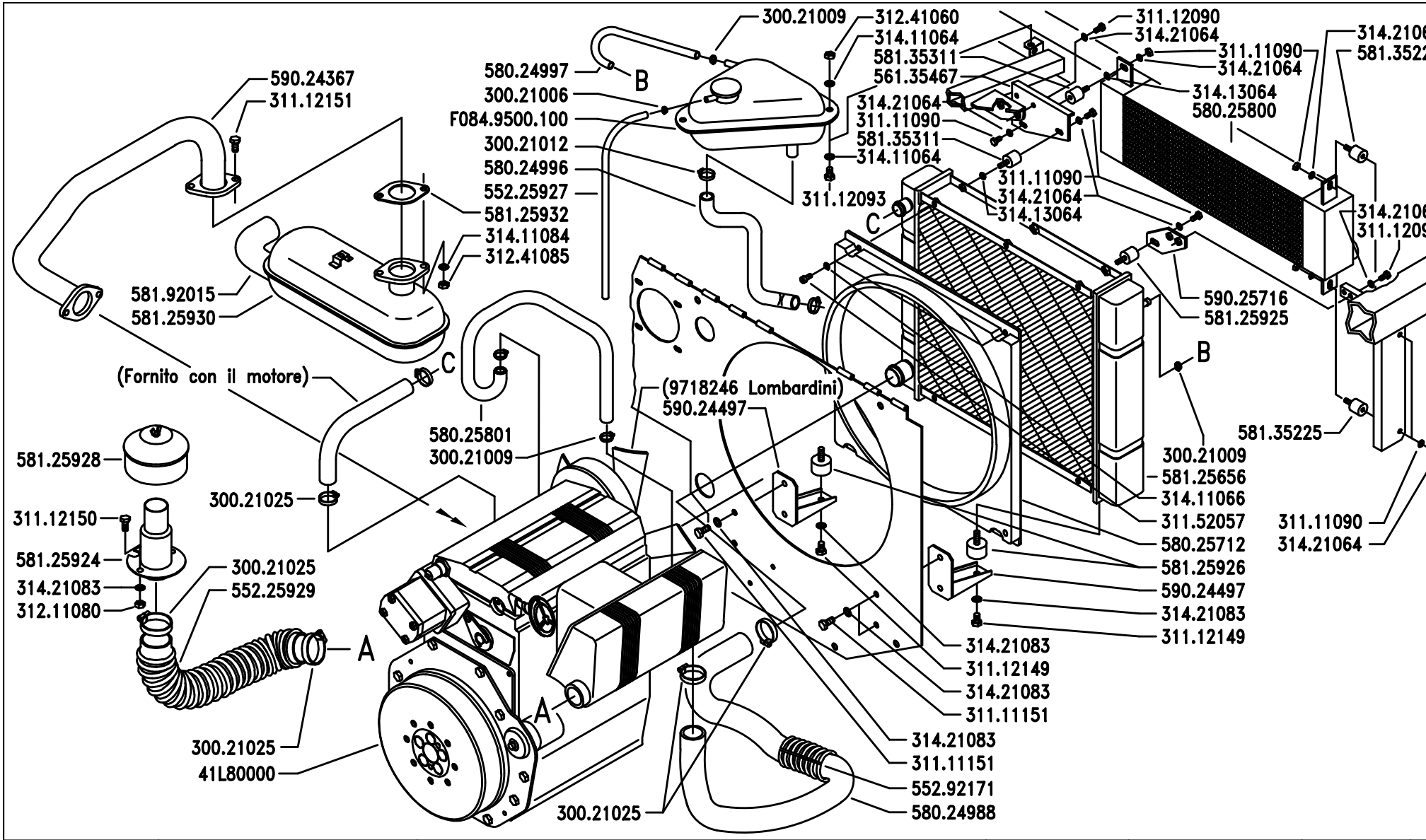

BCS

SERIE

MA.TRA

MOTORE E RADIATORE (MT103 – MT104)

MOTOR AND RADIATOR (MT103 – MT104)

MOTEUR ET RADIATEUR (MT103 – MT104)

MOTOR Y RADIATOR (MT103 – MT104)

MOTOR UND KÜHLER (MT103 – MT104)

DALLA MACCHINA
DE LA MAQUINA
DE LA MACHINE
FROM THE MACHINE
AB DER MASCHINE
N.

Sostituisce	C02/0
Sostituye	C02/0
Remplace	C02/0
Replaces	C02/0
Ersätzt	C02/0

C02

2/1999

Pos.	Code	Q.ty	Description	Notes
30021006	30021006	0	CLAMP 7-11	
30021009	30021009	0	CLAMP 10/16-9	
30021012	30021012	0	CLAMP 12-22 INOX	
30021025	30021025	0	CLAMP 25-45	
31111090	31111090	0	SCREW TE M5X10 UNI 5739 8G	
31111151	31111151	0	SCREW TE M8X16 UNI 5739 8G	
31112090	31112090	0	SCREW TE M6X16 UNI 5739 8G	
31112093	31112093	0	SCREW TE M6X20	
31112149	31112149	0	SCREW TE M8X12 UNI 5739 8G	
31112150	31112150	0	SCREW TE M8X20 UNI 5739 8G	
31112151	31112151	0	SCREW TE M8X25 UNI 5739 8G	
31152057	31152057	0	SCREW TCEI M6X16 UNI 5931	
31211080	31211080	0	NUT M8	
31241060	31241060	0	HEXAGON SELFLOCK NUT M6	
31241085	31241085	0	SELFLOCK NUT M8 6S	
31411064	31411064	0	WASHER 6,4x12,5	
31411066	31411066	0	WASHER 6,6x18	
31411084	31411084	0	WASHER 8,4x17	
31413064	31413064	0	WASHER 6,4	
31421064	31421064	0	WASHER	
31421083	31421083	0	WASHER	
41L80000	41L80000	0	MOT LOMB LDW903 K254866	
55225927	55225927	0	TUBE	
55225929	55225929	0	PIPE	
55292171	55292171	0	PROTECTIVE HOSE	
56135467	56135467	0	SUPPORT	
58024988	58024988	0	PIPE	
58024996	58024996	0	PIPE	
58024997	58024997	0	PIPE	
58025712	58025712	0	DUCT	
58025800	58025800	0	OIL COOLER	
58025801	58025801	0	PIPE	
58125656	58125656	0	RADIATOR	
58125924	58125924	0	PIPE	

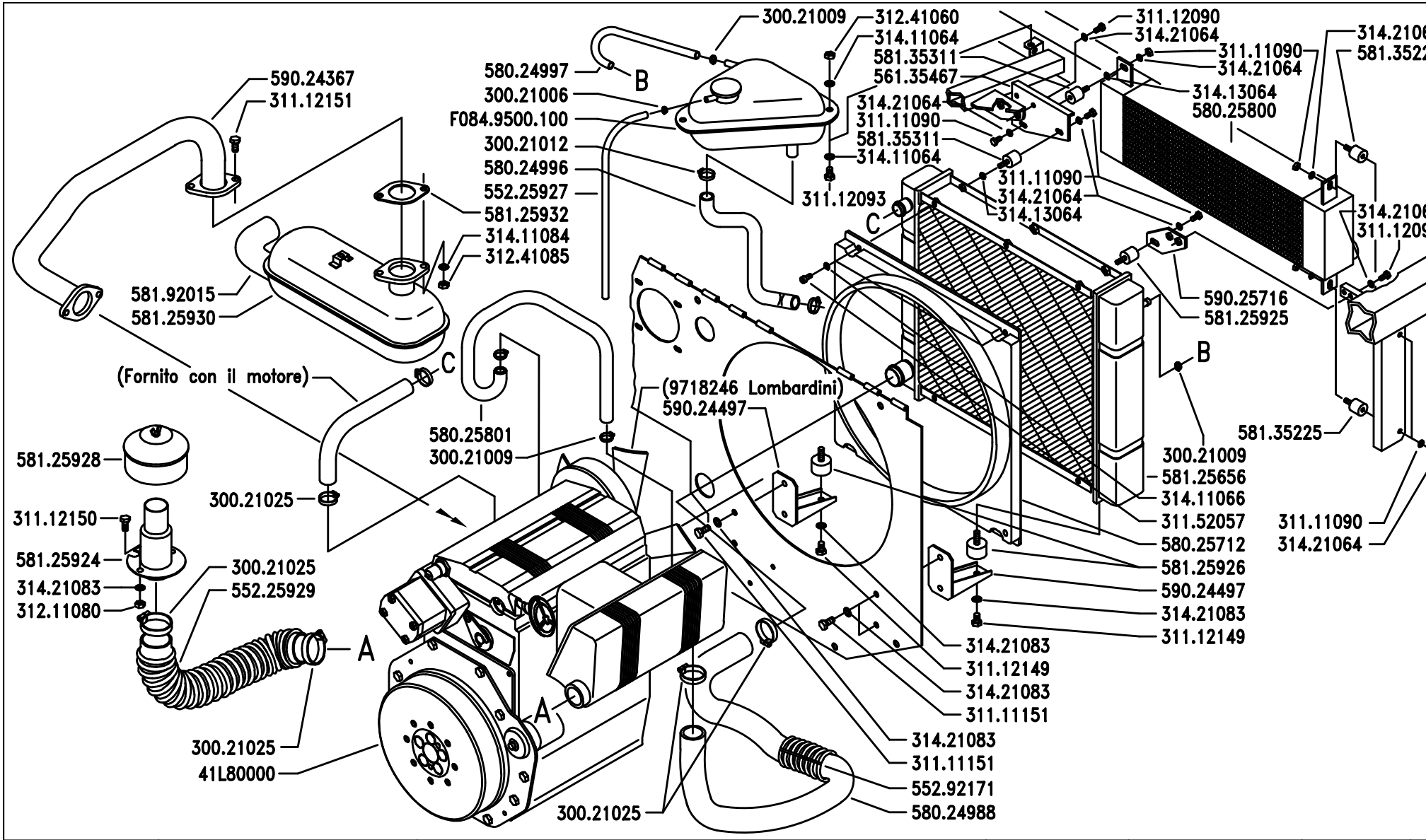

BCS	SERIE MA.TRA	MOTORE E RADIATORE (MT103 – MT104) MOTOR AND RADIATOR (MT103 – MT104) MOTEUR ET RADIATEUR (MT103 – MT104) MOTOR Y RADIATOR (MT103 – MT104) MOTOR UND KÜHLER (MT103 – MT104)	DALLA MACCHINA DE LA MAQUINA DE LA MACHINE FROM THE MACHINE AB DER MASCHINE N.	Sostituisce C02/0 Sostituye C02/0 Remplace C02/0 Replaces C02/0 Ersätzt C02/0	C02 2/1999

Pos.	Code	Q.ty	Description	Notes
58125925	58125925	0	VIBRATION-DAMPING	
58125926	58125926	0	VIBRATION-DAMPING	
58125928	58125928	0	PRECLEANER	
58125930	58125930	0	SILENCER	
58125932	58125932	0	GASKET	
58135225	58135225	0	VIBRATION-DAMPING	
58135311	58135311	0	VIBRATION-DAMPING	
58192015	58192015	0	TERMINAL	
59024367	59024367	0	EXHAUST	
59024497	59024497	0	SUPPORT	
59025716	59025716	0	SUPPORT	
F0849500	F0849500100	0	CUP	

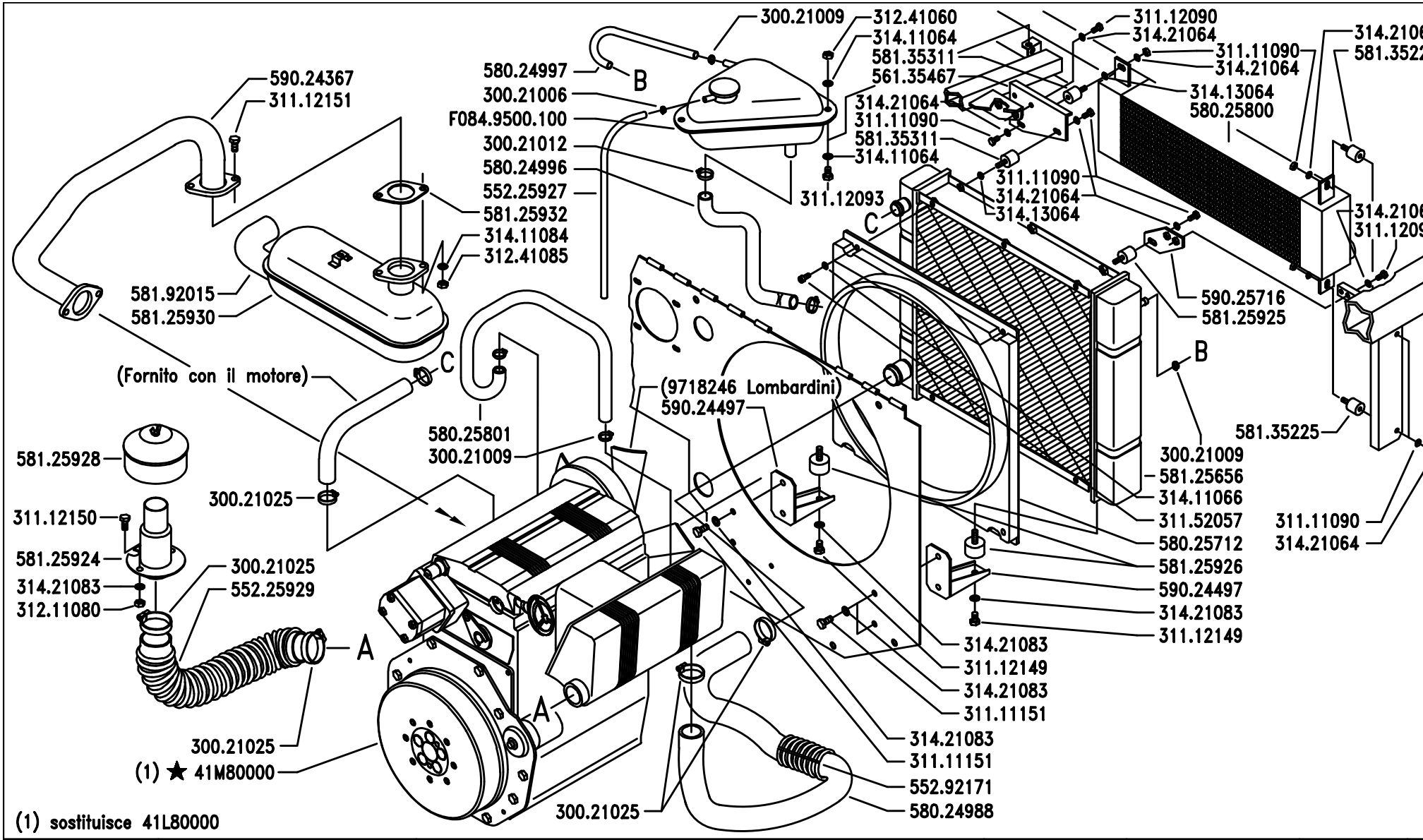

BCS	SERIE MA.TRA	MOTORE E RADIATORE (MT103 – MT104) MOTOR AND RADIATOR (MT103 – MT104) MOTEUR ET RADIATEUR (MT103 – MT104) MOTOR Y RADIATOR (MT103 – MT104) MOTOR UND KÜHLER (MT103 – MT104)	DALLA MACCHINA DE LA MAQUINA DE LA MACHINE FROM THE MACHINE AB DER MASCHINE ★ N.	AGGIORNAMENTO APLAZAMIENTO MISE A JOUR REVISION ANPASSUNG	C02 1/2000

Pos.	Code	Q.ty	Description	Notes
30021006	30021006	0	CLAMP 7-11	
30021009	30021009	0	CLAMP 10/16-9	
30021012	30021012	0	CLAMP 12-22 INOX	
30021025	30021025	0	CLAMP 25-45	
31111090	31111090	0	SCREW TE M5X10 UNI 5739 8G	
31111151	31111151	0	SCREW TE M8X16 UNI 5739 8G	
31112090	31112090	0	SCREW TE M6X16 UNI 5739 8G	
31112093	31112093	0	SCREW TE M6X20	
31112149	31112149	0	SCREW TE M8X12 UNI 5739 8G	
31112150	31112150	0	SCREW TE M8X20 UNI 5739 8G	
31112151	31112151	0	SCREW TE M8X25 UNI 5739 8G	
31152057	31152057	0	SCREW TCEI M6X16 UNI 5931	
31211080	31211080	0	NUT M8	
31241060	31241060	0	HEXAGON SELFLOCK NUT M6	
31241085	31241085	0	SELFLOCK NUT M8 6S	
31411064	31411064	0	WASHER 6,4x12,5	
31411066	31411066	0	WASHER 6,6x18	
31411084	31411084	0	WASHER 8,4x17	
31413064	31413064	0	WASHER 6,4	
31421064	31421064	0	WASHER	
31421083	31421083	0	WASHER	
41M80000	41M80000	0	MOT LOMB LDW1003 K2A0400	
55225927	55225927	0	TUBE	
55225929	55225929	0	PIPE	
55292171	55292171	0	PROTECTIVE HOSE	
56135467	56135467	0	SUPPORT	
58024988	58024988	0	PIPE	
58024996	58024996	0	PIPE	
58024997	58024997	0	PIPE	
58025712	58025712	0	DUCT	
58025800	58025800	0	OIL COOLER	
58025801	58025801	0	PIPE	
58125656	58125656	0	RADIATOR	
58125924	58125924	0	PIPE	

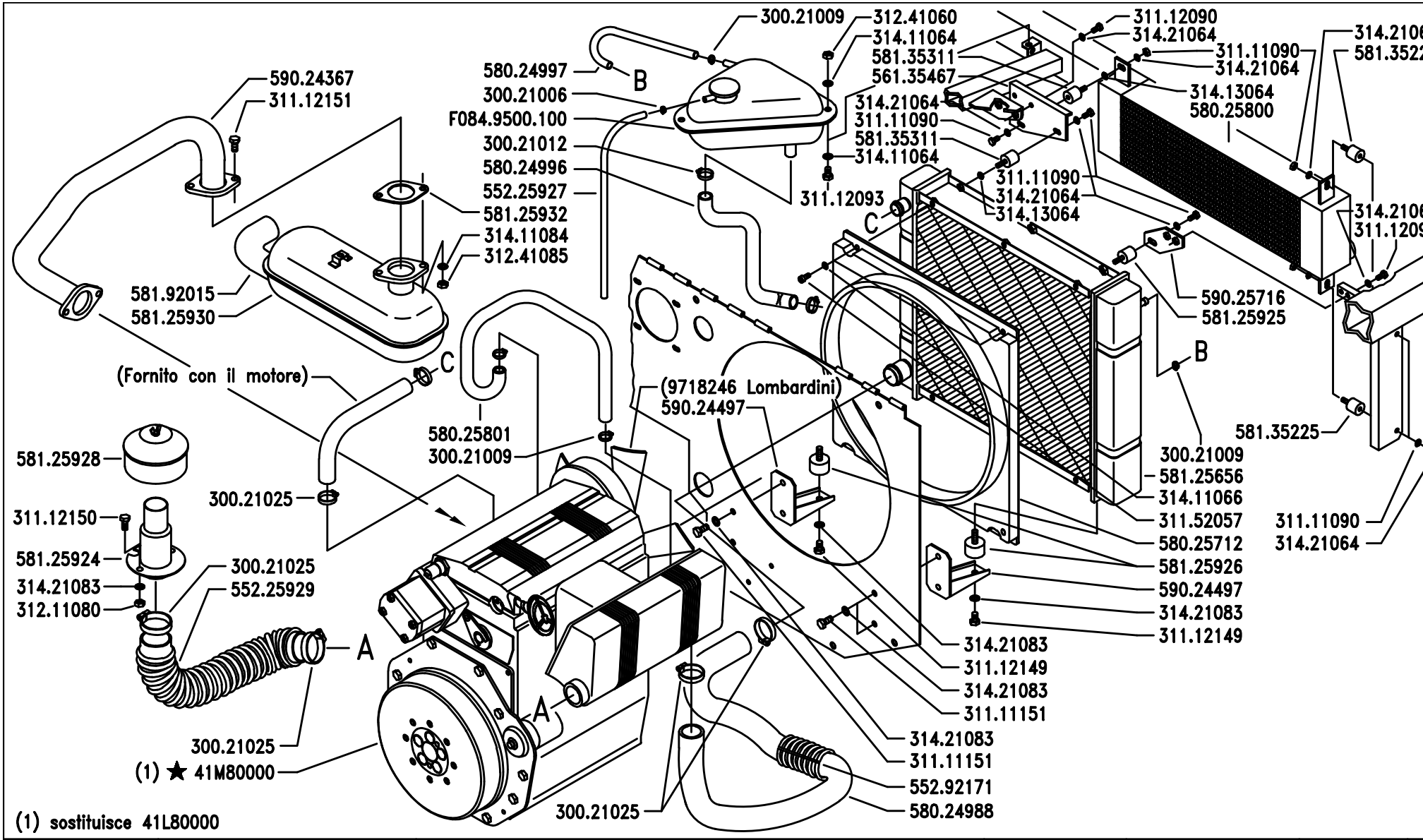

BCS	SERIE MA.TRA	MOTORE E RADIATORE (MT103 – MT104) MOTOR AND RADIATOR (MT103 – MT104) MOTEUR ET RADIATEUR (MT103 – MT104) MOTOR Y RADIATOR (MT103 – MT104) MOTOR UND KÜHLER (MT103 – MT104)	DALLA MACCHINA DE LA MAQUINA DE LA MACHINE FROM THE MACHINE AB DER MASCHINE ★ N.	AGGIORNAMENTO APLAZAMIENTO MISE A JOUR REVISION ANPASSUNG	C02 1/2000

Pos.	Code	Q.ty	Description	Notes
58125925	58125925	0	VIBRATION-DAMPING	
58125926	58125926	0	VIBRATION-DAMPING	
58125928	58125928	0	PRECLEANER	
58125930	58125930	0	SILENCER	
58125932	58125932	0	GASKET	
58135225	58135225	0	VIBRATION-DAMPING	
58135311	58135311	0	VIBRATION-DAMPING	
58192015	58192015	0	TERMINAL	
59024367	59024367	0	EXHAUST	
59024497	59024497	0	SUPPORT	
59025716	59025716	0	SUPPORT	
F0849500	F0849500100	0	CUP	

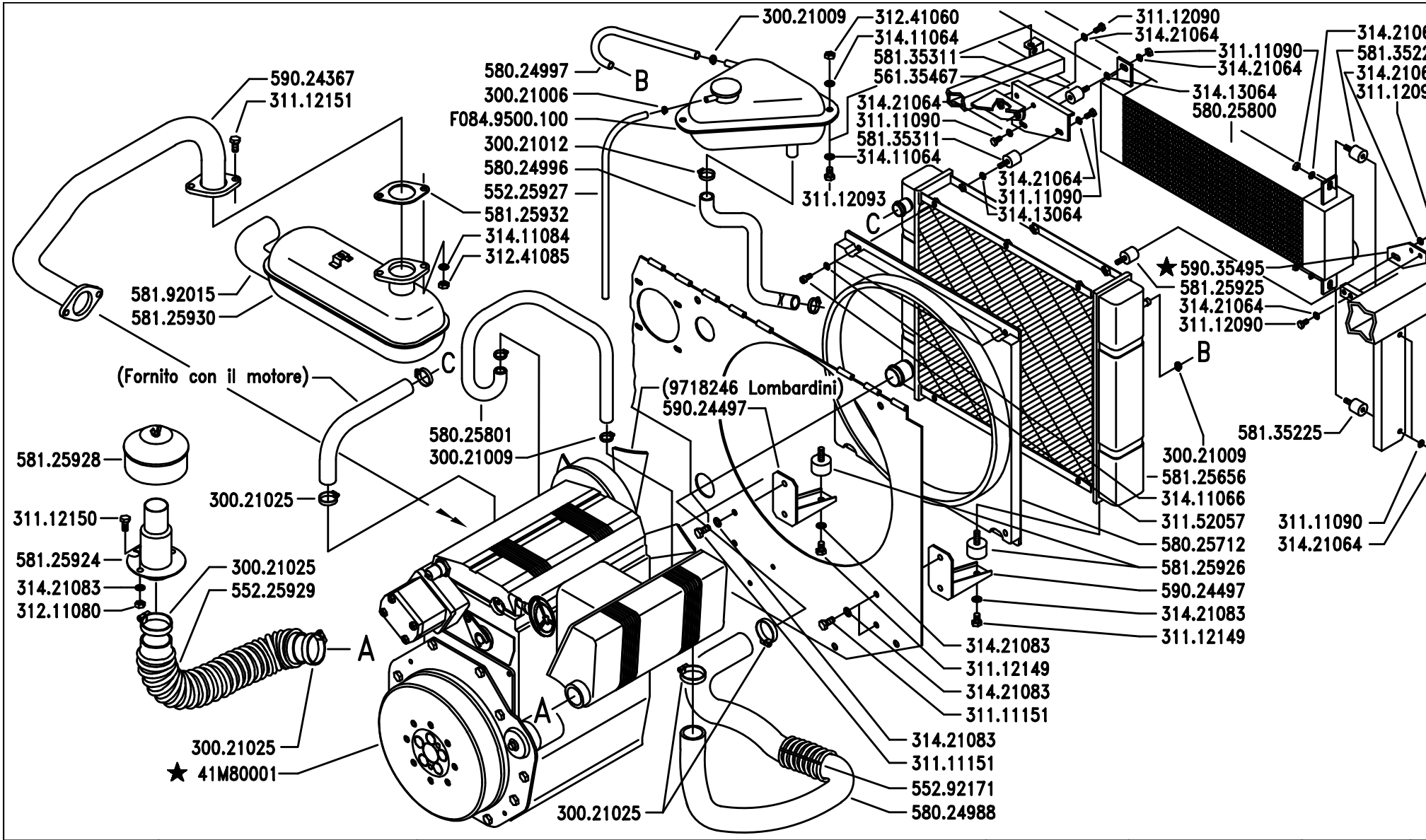

BCS	SERIE MA.TRA	MOTORE E RADIATORE (MT103 – MT104 –MT205) MOTOR AND RADIATOR (MT103 – MT104 – MT205) MOTEUR ET RADIATEUR (MT103 – MT104 – MT205) MOTOR Y RADIATOR (MT103 – MT104 – MT205) MOTOR UND KÜHLER (MT103 – MT104 – MT205)	DALLA MACCHINA DE LA MAQUINA DE LA MACHINE FROM THE MACHINE AB DER MASCHINE ★ N.	1480	C02 2/200

Pos.	Code	Q.ty	Description	Notes
30021006	30021006	0	CLAMP 7-11	
30021009	30021009	0	CLAMP 10/16-9	
30021012	30021012	0	CLAMP 12-22 INOX	
30021025	30021025	0	CLAMP 25-45	
31111090	31111090	0	SCREW TE M5X10 UNI 5739 8G	
31111151	31111151	0	SCREW TE M8X16 UNI 5739 8G	
31112090	31112090	0	SCREW TE M6X16 UNI 5739 8G	
31112093	31112093	0	SCREW TE M6X20	
31112149	31112149	0	SCREW TE M8X12 UNI 5739 8G	
31112150	31112150	0	SCREW TE M8X20 UNI 5739 8G	
31112151	31112151	0	SCREW TE M8X25 UNI 5739 8G	
31152057	31152057	0	SCREW TCEI M6X16 UNI 5931	
31211080	31211080	0	NUT M8	
31241060	31241060	0	HEXAGON SELFLOCK NUT M6	
31241085	31241085	0	SELFLOCK NUT M8 6S	
31411064	31411064	0	WASHER 6,4x12,5	
31411066	31411066	0	WASHER 6,6x18	
31411084	31411084	0	WASHER 8,4x17	
31413064	31413064	0	WASHER 6,4	
31421064	31421064	0	WASHER	
31421083	31421083	0	WASHER	
41M80001	41M80001	0	MOT LOMB LDW1003 K2A41C2	
55225927	55225927	0	TUBE	
55225929	55225929	0	PIPE	
55292171	55292171	0	PROTECTIVE HOSE	
56135467	56135467	0	SUPPORT	
58024988	58024988	0	PIPE	
58024996	58024996	0	PIPE	
58024997	58024997	0	PIPE	
58025712	58025712	0	DUCT	
58025800	58025800	0	OIL COOLER	
58025801	58025801	0	PIPE	
58125656	58125656	0	RADIATOR	
58125924	58125924	0	PIPE	

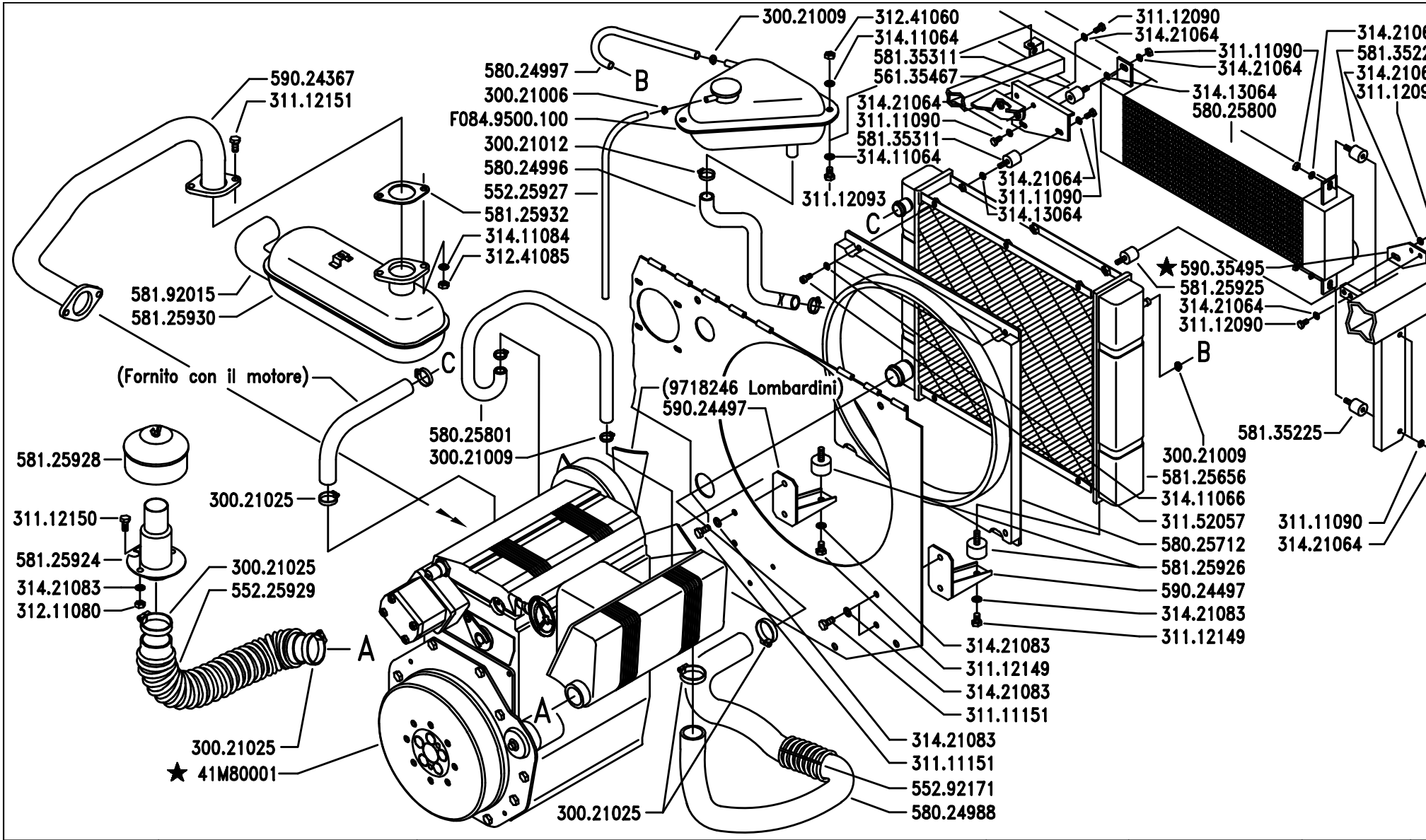

BCS

SERIE

MA.TRA

MOTORE E RADIATORE (MT103 – MT104 –MT205)

MOTOR AND RADIATOR (MT103 – MT104 – MT205)

MOTEUR ET RADIATEUR (MT103 – MT104 – MT205)

MOTOR Y RADIATOR (MT103 – MT104 – MT205)

MOTOR UND KÜHLER (MT103 – MT104 – MT205)

DALLA MACCHINA
DE LA MAQUINA
DE LA MACHINE
FROM THE MACHINE
AB DER MASCHINE

★ N. 1480

C02

2/200

Pos.	Code	Q.ty	Description	Notes
58125925	58125925	0	VIBRATION-DAMPING	
58125926	58125926	0	VIBRATION-DAMPING	
58125928	58125928	0	PRECLEANER	
58125930	58125930	0	SILENCER	
58125932	58125932	0	GASKET	
58135225	58135225	0	VIBRATION-DAMPING	
58135311	58135311	0	VIBRATION-DAMPING	
58192015	58192015	0	TERMINAL	
59024367	59024367	0	EXHAUST	
59024497	59024497	0	SUPPORT	
59035495	59035495	0	SUPPORT	
F0849500	F0849500100	0	CUP	

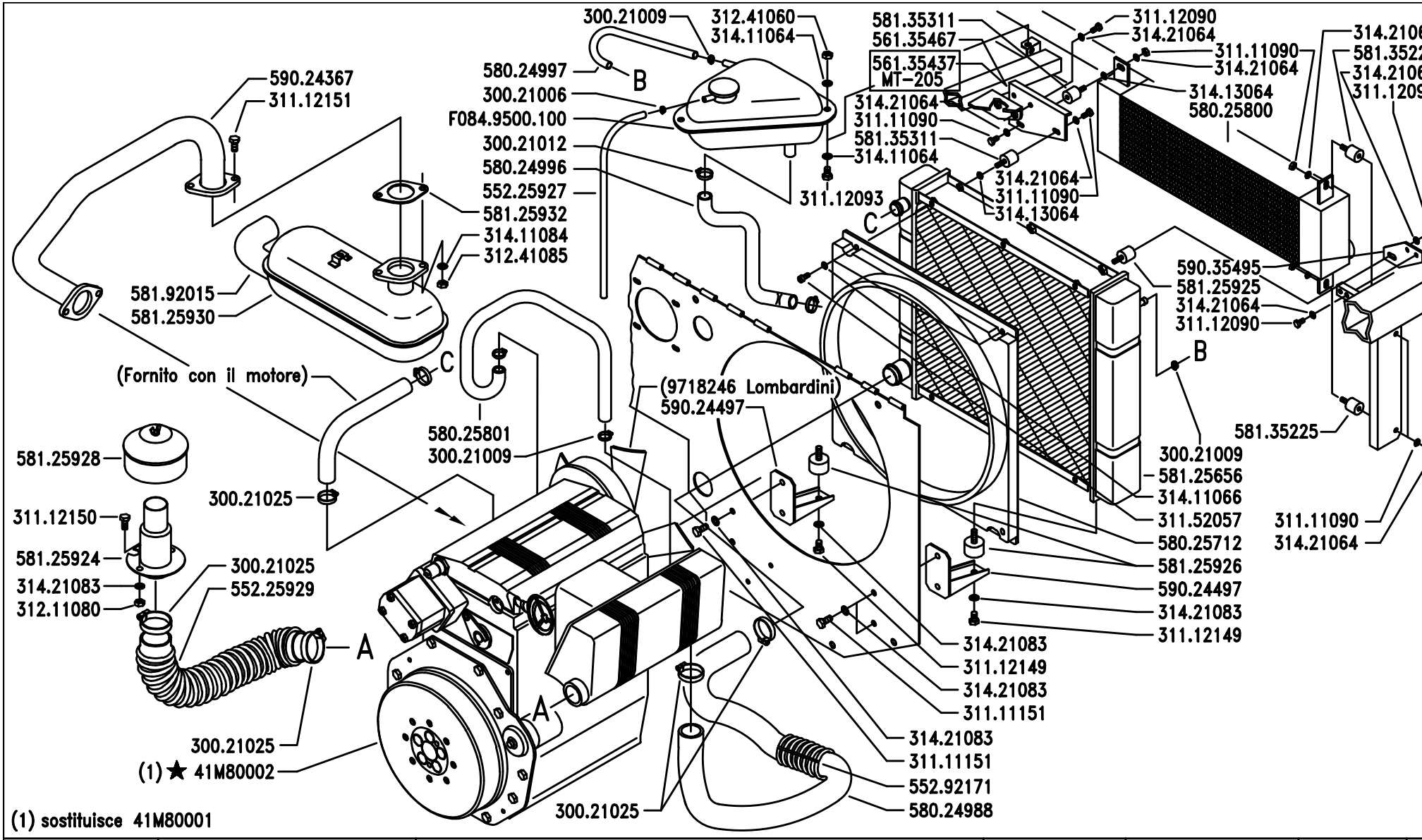

BCS

SERIE

MA.TRA

MOTORE E RADIATORE (MT103 – MT104 –MT205)

MOTOR AND RADIATOR (MT103 – MT104 – MT205)

MOTEUR ET RADIATEUR (MT103 – MT104 – MT205)

MOTOR Y RADIATOR (MT103 – MT104 – MT205)

MOTOR UND KÜHLER (MT103 – MT104 – MT205)

DALLA MACCHINA
DE LA MAQUINA
DE LA MACHINE
FROM THE MACHINE
AB DER MASCHINE

★ N. 717009

C02

11/200

Pos.	Code	Q.ty	Description	Notes
30021006	30021006	0	CLAMP 7-11	
30021009	30021009	0	CLAMP 10/16-9	
30021012	30021012	0	CLAMP 12-22 INOX	
30021025	30021025	0	CLAMP 25-45	
31111090	31111090	0	SCREW TE M5X10 UNI 5739 8G	
31111151	31111151	0	SCREW TE M8X16 UNI 5739 8G	
31112090	31112090	0	SCREW TE M6X16 UNI 5739 8G	
31112093	31112093	0	SCREW TE M6X20	
31112149	31112149	0	SCREW TE M8X12 UNI 5739 8G	
31112150	31112150	0	SCREW TE M8X20 UNI 5739 8G	
31112151	31112151	0	SCREW TE M8X25 UNI 5739 8G	
31152057	31152057	0	SCREW TCEI M6X16 UNI 5931	
31211080	31211080	0	NUT M8	
31241060	31241060	0	HEXAGON SELFLOCK NUT M6	
31241085	31241085	0	SELFLOCK NUT M8 6S	
31411064	31411064	0	WASHER 6,4x12,5	
31411066	31411066	0	WASHER 6,6x18	
31411084	31411084	0	WASHER 8,4x17	
31413064	31413064	0	WASHER 6,4	
31421064	31421064	0	WASHER	
31421083	31421083	0	WASHER	
41M80002	41M80002	1	ENGINE LDW1003CARBEPA	
55225927	55225927	0	TUBE	
55225929	55225929	0	PIPE	
55292171	55292171	0	PROTECTIVE HOSE	
56135437	56135437	1	PLATE	
56135467	56135467	0	SUPPORT	
58024988	58024988	0	PIPE	
58024996	58024996	0	PIPE	
58024997	58024997	0	PIPE	
58025712	58025712	0	DUCT	
58025800	58025800	0	OIL COOLER	
58025801	58025801	0	PIPE	
58125656	58125656	0	RADIATOR	

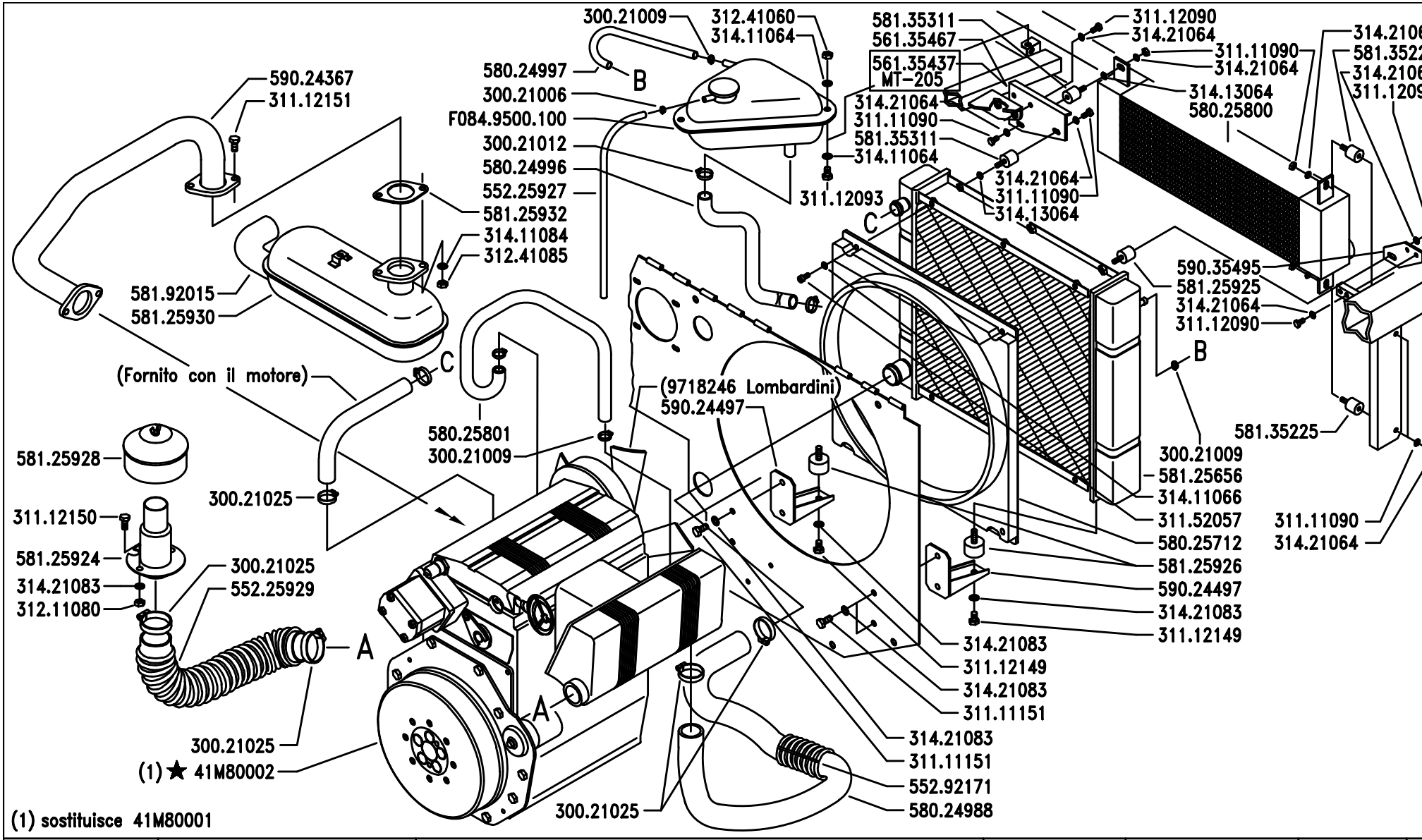

BCS	SERIE MA.TRA	MOTORE E RADIATORE (MT103 – MT104 –MT205) MOTOR AND RADIATOR (MT103 – MT104 – MT205) MOTEUR ET RADIATEUR (MT103 – MT104 – MT205) MOTOR Y RADIATOR (MT103 – MT104 – MT205) MOTOR UND KÜHLER (MT103 – MT104 – MT205)	DALLA MACCHINA DE LA MAQUINA DE LA MACHINE FROM THE MACHINE AB DER MASCHINE ★ N.	717009	C02 11/200

Pos.	Code	Q.ty	Description	Notes
58125924	58125924	0	PIPE	
58125925	58125925	0	VIBRATION-DAMPING	
58125926	58125926	0	VIBRATION-DAMPING	
58125928	58125928	0	PRECLEANER	
58125930	58125930	0	SILENCER	
58125932	58125932	0	GASKET	
58135225	58135225	0	VIBRATION-DAMPING	
58135311	58135311	0	VIBRATION-DAMPING	
58192015	58192015	0	TERMINAL	
59024367	59024367	0	EXHAUST	
59024497	59024497	0	SUPPORT	
59035495	59035495	0	SUPPORT	
F0849500	F0849500100	0	CUP	

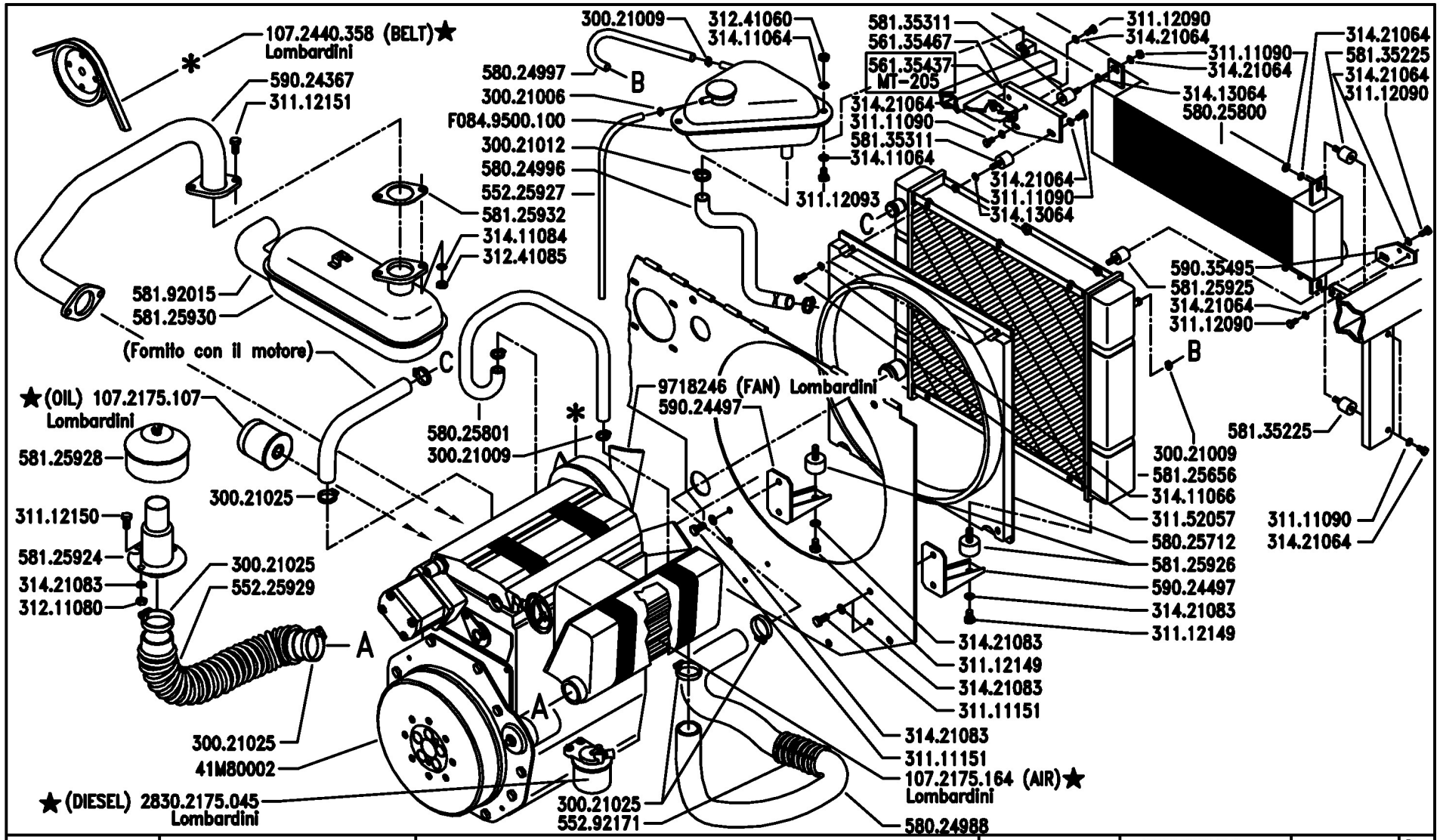

BCS	SERIE MA.TRA	MOTORE E RADIATORE (MT103 - MT104 -MT205) MOTOR AND RADIATOR (MT103 - MT104 - MT205) MOTEUR ET RADIATEUR (MT103 - MT104 - MT205) MOTOR Y RADIATOR (MT103 - MT104 - MT205) MOTOR UND KÜHLER (MT103 - MT104 - MT205)	DALLA MACCHINA DE LA MAQUINA DE LA MACHINE FROM THE MACHINE AB DER MASCHINE ★ N.	AGGIORNAMENTO APLAZAMIENTO MISE A JOUR REVISION ANPASSUNG	C02 Rev. 5 06/2006

Pos.	Code	Q.ty	Description	Notes
30021006	30021006	0	CLAMP 7-11	
30021009	30021009	0	CLAMP 10/16-9	
30021012	30021012	0	CLAMP 12-22 INOX	
30021025	30021025	0	CLAMP 25-45	
31111090	31111090	0	SCREW TE M5X10 UNI 5739 8G	
31111151	31111151	0	SCREW TE M8X16 UNI 5739 8G	
31112090	31112090	0	SCREW TE M6X16 UNI 5739 8G	
31112093	31112093	0	SCREW TE M6X20	
31112149	31112149	0	SCREW TE M8X12 UNI 5739 8G	
31112150	31112150	0	SCREW TE M8X20 UNI 5739 8G	
31112151	31112151	0	SCREW TE M8X25 UNI 5739 8G	
31152057	31152057	0	SCREW TCEI M6X16 UNI 5931	
31211080	31211080	0	NUT M8	
31241060	31241060	0	HEXAGON SELFLOCK NUT M6	
31241085	31241085	0	SELFLOCK NUT M8 6S	
31411064	31411064	0	WASHER 6,4x12,5	
31411066	31411066	0	WASHER 6,6x18	
31411084	31411084	0	WASHER 8,4x17	
31413064	31413064	0	WASHER 6,4	
31421064	31421064	0	WASHER	
31421083	31421083	0	WASHER	
41M80002	41M80002	0	ENGINE LDW1003CARBEPA	
55225927	55225927	0	TUBE	
55225929	55225929	0	PIPE	
55292171	55292171	0	PROTECTIVE HOSE	
56135437	56135437	0	PLATE	
56135467	56135467	0	SUPPORT	
58024988	58024988	0	PIPE	
58024996	58024996	0	PIPE	
58024997	58024997	0	PIPE	
58025712	58025712	0	DUCT	
58025800	58025800	0	OIL COOLER	
58025801	58025801	0	PIPE	
58125656	58125656	0	RADIATOR	

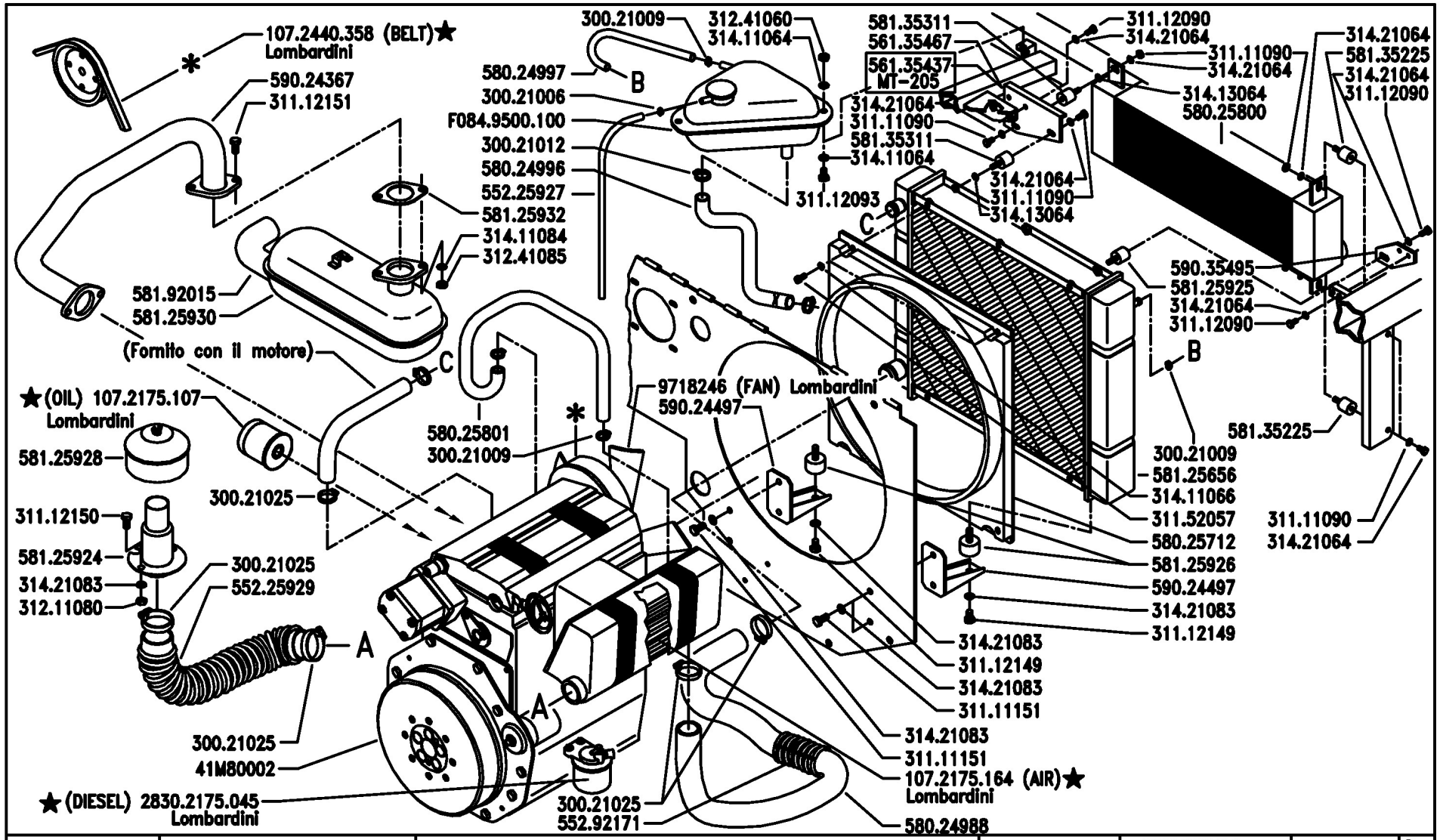

BCS	SERIE MA.TRA	MOTORE E RADIATORE (MT103 - MT104 -MT205) MOTOR AND RADIATOR (MT103 - MT104 - MT205) MOTEUR ET RADIATEUR (MT103 - MT104 - MT205) MOTOR Y RADIATOR (MT103 - MT104 - MT205) MOTOR UND KÜHLER (MT103 - MT104 - MT205)	DALLA MACCHINA DE LA MAQUINA DE LA MACHINE FROM THE MACHINE AB DER MASCHINE ★ N.	AGGIORNAMENTO APLAZAMIENTO MISE A JOUR REVISION ANPASSUNG	C02 Rev. 5 06/2006

Pos.	Code	Q.ty	Description	Notes
58125924	58125924	0	PIPE	
58125925	58125925	0	VIBRATION-DAMPING	
58125926	58125926	0	VIBRATION-DAMPING	
58125928	58125928	0	PRECLEANER	
58125930	58125930	0	SILENCER	
58125932	58125932	0	GASKET	
58135225	58135225	0	VIBRATION-DAMPING	
58135311	58135311	0	VIBRATION-DAMPING	
58192015	58192015	0	TERMINAL	
59024367	59024367	0	EXHAUST	
59024497	59024497	0	SUPPORT	
59035495	59035495	0	SUPPORT	
F0849500	F0849500100	0	CUP	

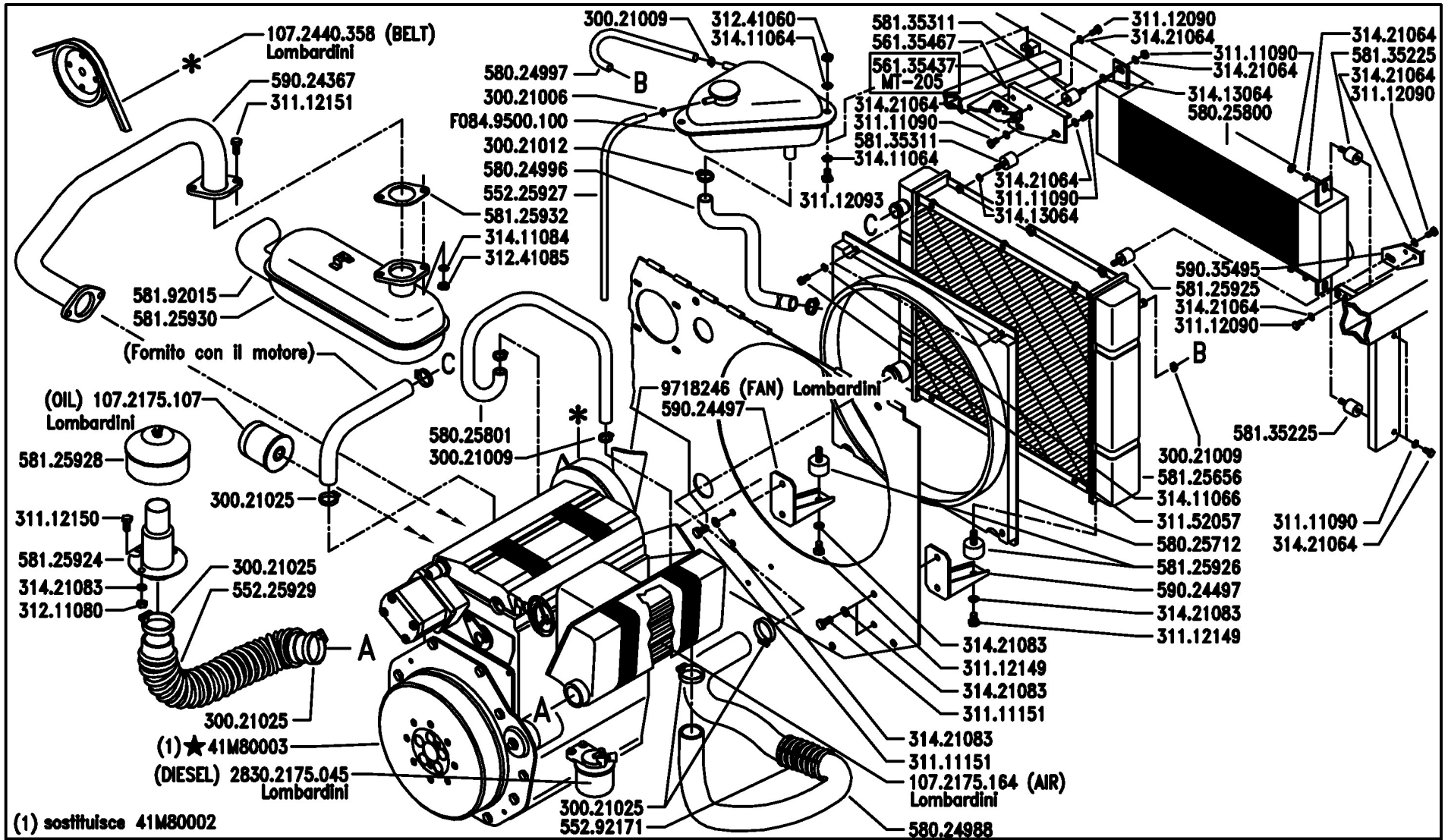

BCS	SERIE MA.TRA	MOTORE E RADIATORE (MT103 - MT104 -MT205) MOTOR AND RADIATOR (MT103 - MT104 - MT205) MOTEUR ET RADIATEUR (MT103 - MT104 - MT205) MOTOR Y RADIATOR (MT103 - MT104 - MT205) MOTOR UND KÜHLER (MT103 - MT104 - MT205)	DALLA MACCHINA DE LA MAQUINA DE LA MACHINE FROM THE MACHINE AB DER MASCHINE ★ N.	CHIEDERE A S.A.T. ASK TO S.A.T. DEMANDER A S.A.T. SOLICITAR EL S.A.T. ANFRAGEN DER S.A.T.	C02 Rev. 6 02/2007

Pos.	Code	Q.ty	Description	Notes
30021006	30021006	1	CLAMP 7-11	
30021009	30021009	1	CLAMP 10/16-9	
30021012	30021012	1	CLAMP 12-22 INOX	
30021025	30021025	1	CLAMP 25-45	
31111090	31111090	1	SCREW TE M5X10 UNI 5739 8G	
31111151	31111151	1	SCREW TE M8X16 UNI 5739 8G	
31112090	31112090	1	SCREW TE M6X16 UNI 5739 8G	
31112093	31112093	1	SCREW TE M6X20	
31112149	31112149	1	SCREW TE M8X12 UNI 5739 8G	
31112150	31112150	1	SCREW TE M8X20 UNI 5739 8G	
31112151	31112151	1	SCREW TE M8X25 UNI 5739 8G	
31152057	31152057	1	SCREW TCEI M6X16 UNI 5931	
31211080	31211080	1	NUT M8	
31241060	31241060	1	HEXAGON SELFLOCK NUT M6	
31241085	31241085	1	SELFLOCK NUT M8 6S	
31411064	31411064	1	WASHER 6,4x12,5	
31411066	31411066	1	WASHER 6,6x18	
31411084	31411084	1	WASHER 8,4x17	
31413064	31413064	1	WASHER 6,4	
31421064	31421064	1	WASHER	
31421083	31421083	1	WASHER	
41M80003	41M80003	1	MOT LOM LDW1003 2C87D0/2D17CO	
55225927	55225927	1	TUBE	
55225929	55225929	1	PIPE	
55292171	55292171	1	PROTECTIVE HOSE	
56135437	56135437	1	PLATE	
56135467	56135467	1	SUPPORT	
58024988	58024988	1	PIPE	
58024996	58024996	1	PIPE	
58024997	58024997	1	PIPE	
58025712	58025712	1	DUCT	
58025800	58025800	1	OIL COOLER	
58025801	58025801	1	PIPE	
58125656	58125656	1	RADIATOR	

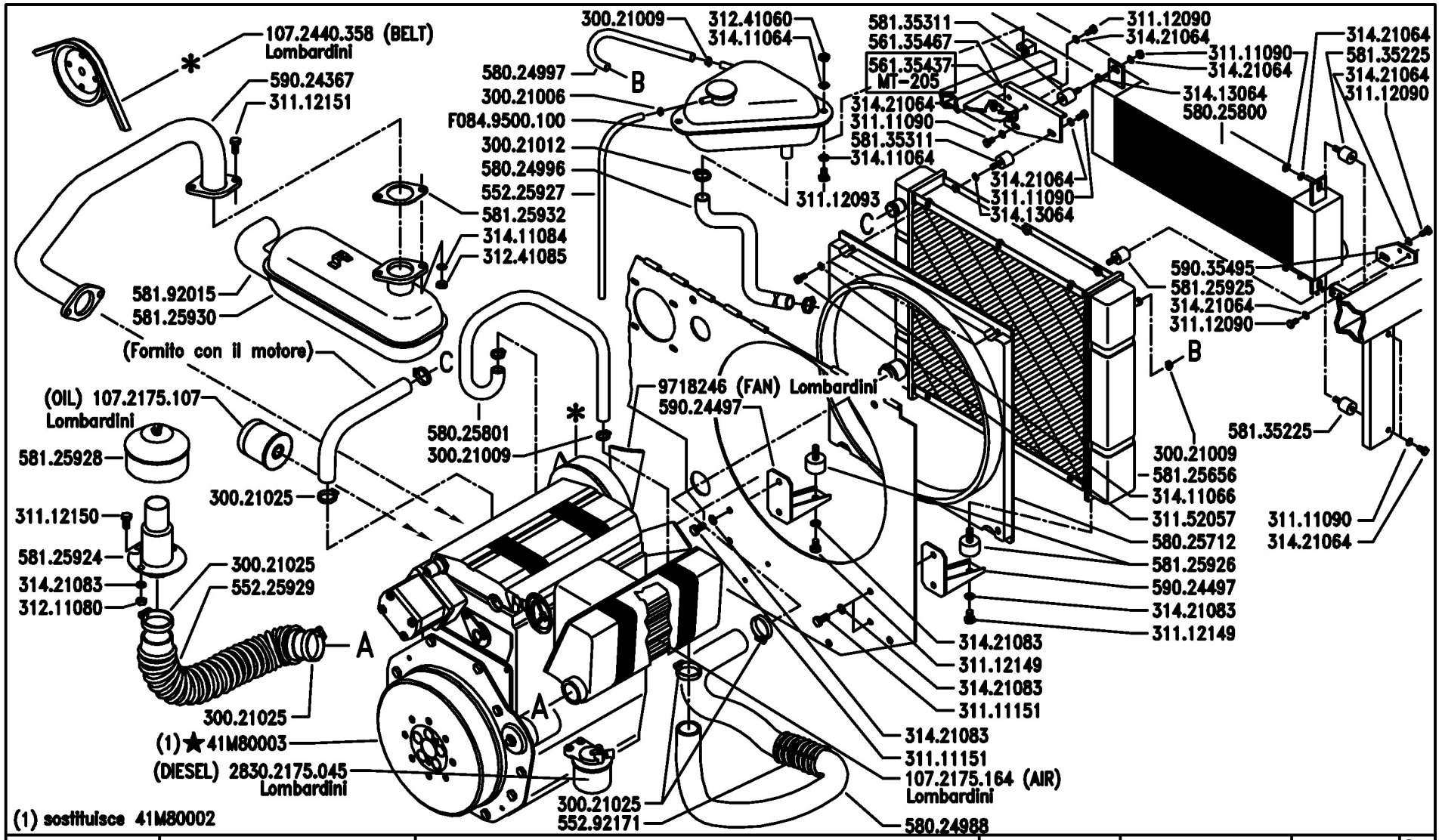

BCS	SERIE MA.TRA	MOTORE E RADIATORE (MT103 - MT104 -MT205) MOTOR AND RADIATOR (MT103 - MT104 - MT205) MOTEUR ET RADIATEUR (MT103 - MT104 - MT205) MOTOR Y RADIATOR (MT103 - MT104 - MT205) MOTOR UND KÜHLER (MT103 - MT104 - MT205)	DALLA MACCHINA DE LA MAQUINA DE LA MACHINE FROM THE MACHINE AB DER MASCHINE ★ N.	CHIEDERE A S.A.T. ASK TO S.A.T. DEMANDER A S.A.T. SOLICITAR EL S.A.T. ANFRAGEN DER S.A.T.	C02 Rev. 6 02/2007

Pos.	Code	Q.ty	Description	Notes
58125924	58125924	1	PIPE	
58125925	58125925	1	VIBRATION-DAMPING	
58125926	58125926	1	VIBRATION-DAMPING	
58125928	58125928	1	PRECLEANER	
58125930	58125930	1	SILENCER	
58125932	58125932	1	GASKET	
58135225	58135225	1	VIBRATION-DAMPING	
58135311	58135311	1	VIBRATION-DAMPING	
58192015	58192015	1	TERMINAL	
59024367	59024367	1	EXHAUST	
59024497	59024497	1	SUPPORT	
59035495	59035495	1	SUPPORT	
F0849500	F0849500100	1	CUP	

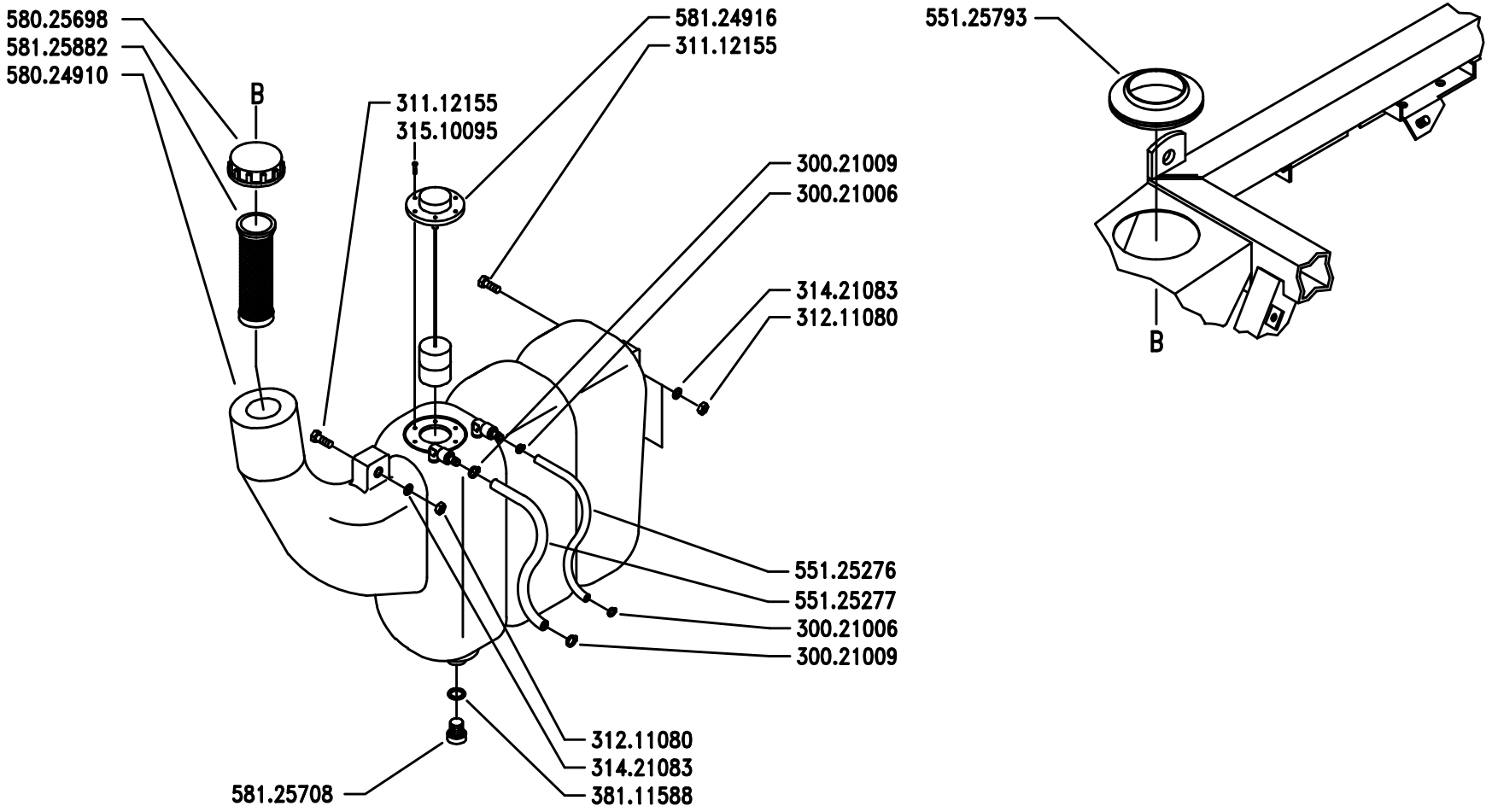

BCS

SERIE

MA.TRA

SERBATOIO CARBURANTE

FUEL TANK

RÉSERVOIR A CARBURANT

DEPÓSITO CARBURANTE

KRAFTSTOFFBEHÄLTER

DALLA MACCHINA
DE LA MAQUINA
DE LA MACHINE
FROM THE MACHINE
AB DER MASCHINE

N.

C03

2/1999

Pos.	Code	Q.ty	Description	Notes
30021006	30021006	0	CLAMP 7-11	
30021009	30021009	0	CLAMP 10/16-9	
31112155	31112155	0	SCREW TE M8X45 UNI 5739 8G	
31211080	31211080	0	NUT M8	
31421083	31421083	0	WASHER	
31510095	31510095	0	RIBBED SCREW 3,5X13 UNI 6954	
38111588	38111588	0	O-RING 121 (15,88x2,62)	
55125276	55125276	0	PIPE D.5	
55125277	55125277	0	PIPE D.6	
55125793	55125793	0	SLEEVE	
58024910	58024910	0	FUEL TANK	
58025698	58025698	0	PLUG	
58124916	58124916	0	TANK INDICATOR	
58125708	58125708	0	PLUG	
58125882	58125882	0	FUEL FILTER	

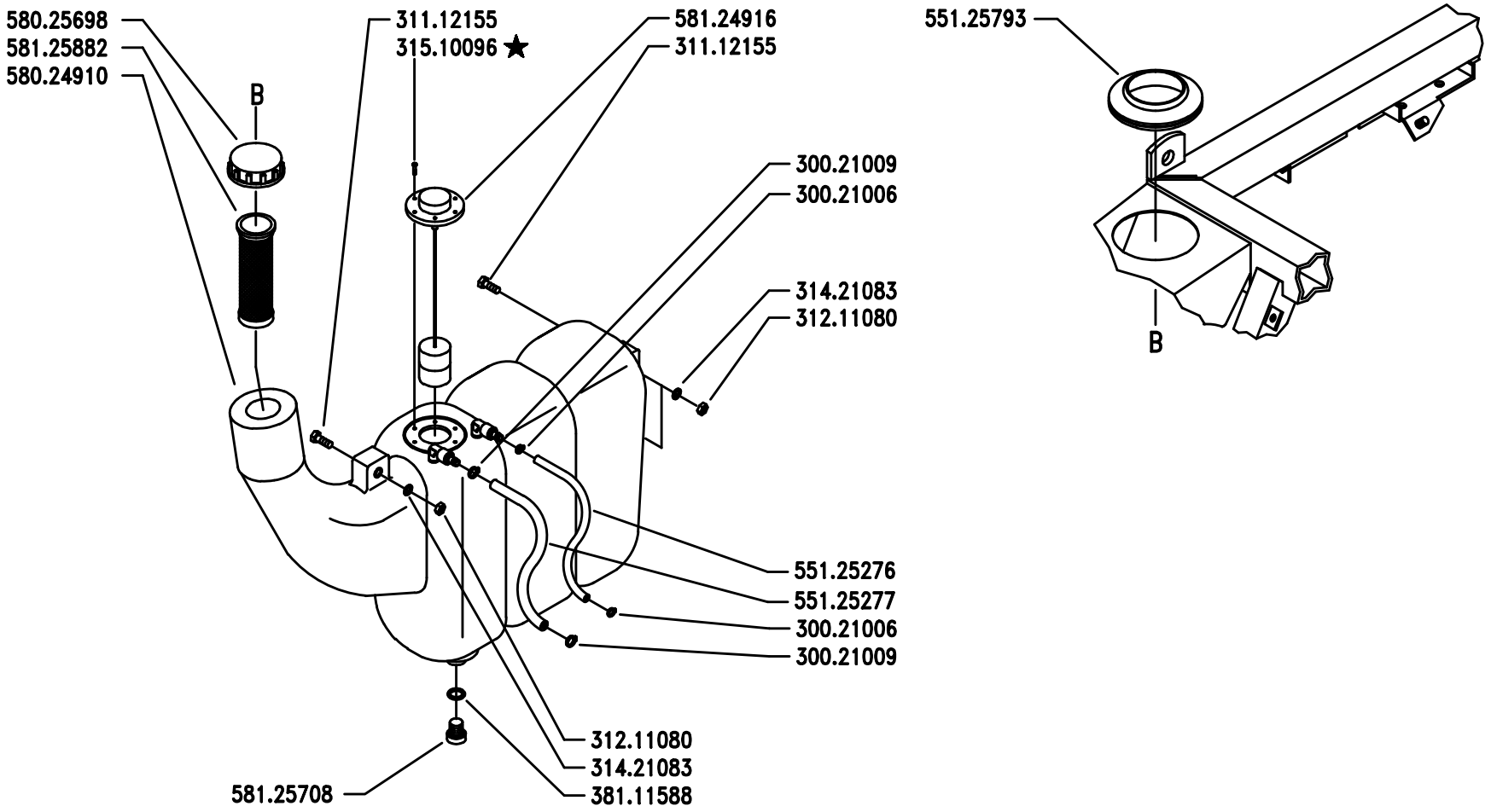

BCS

SERIE

MA.TRA

SERBATOIO CARBURANTE

FUEL TANK

RÉSERVOIR A CARBURANT

DEPÓSITO CARBURANTE

KRAFTSTOFFBEHÄLTER

DALLA MACCHINA
DE LA MAQUINA
DE LA MACHINE
FROM THE MACHINE
AB DER MASCHINE

★ N.

AGGIORNAMENTO
APLAZAMIENTO
MISE A JOUR
REVISION
ANPASSUNG

C03

2/2003

Pos.	Code	Q.ty	Description	Notes
30021006	30021006	0	CLAMP 7-11	
30021009	30021009	0	CLAMP 10/16-9	
31112155	31112155	0	SCREW TE M8X45 UNI 5739 8G	
31211080	31211080	0	NUT M8	
31421083	31421083	0	WASHER	
31510096	31510096	1	RIBBED SCREW 4,2X16	
38111588	38111588	0	O-RING 121 (15,88x2,62)	
55125276	55125276	0	PIPE D.5	
55125277	55125277	0	PIPE D.6	
55125793	55125793	0	SLEEVE	
58024910	58024910	0	FUEL TANK	
58025698	58025698	0	PLUG	
58124916	58124916	0	TANK INDICATOR	
58125708	58125708	0	PLUG	
58125882	58125882	0	FUEL FILTER	

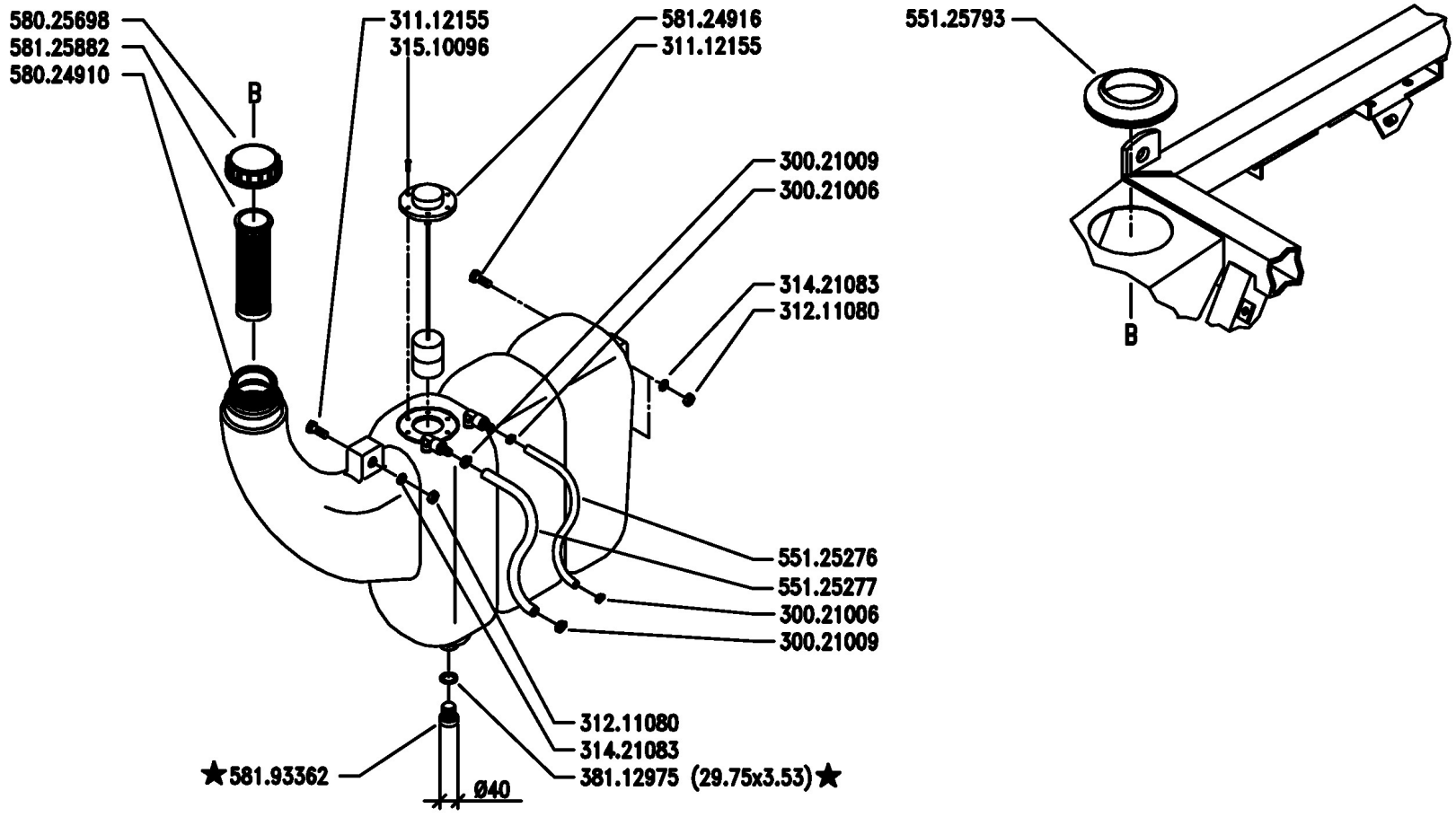

BCS

SERIE

MA.TRA

SERBATOIO CARBURANTE

FUEL TANK

RÉSERVOIR A CARBURANT

DEPÓSITO CARBURANTE

KRAFTSTOFFBEHÄLTER

DALLA MACCHINA
DE LA MAQUINA
DE LA MACHINE
FROM THE MACHINE
AB DER MASCHINE

★ N. 749116

C03

Rev. 2

09/2005

Pos.	Code	Q.ty	Description	Notes
30021006	30021006	1	CLAMP 7-11	
30021009	30021009	1	CLAMP 10/16-9	
31112155	31112155	1	SCREW TE M8X45 UNI 5739 8G	
31211080	31211080	1	NUT M8	
31421083	31421083	1	WASHER	
31510096	31510096	1	RIBBED SCREW 4,2X16	
38112975	38112975	1	O-RING 4118 (29,75X3,53)	
55125276	55125276	1	PIPE D.5	
55125277	55125277	1	PIPE D.6	
55125793	55125793	1	SLEEVE	
58024910	58024910	1	FUEL TANK	
58025698	58025698	1	PLUG	
58124916	58124916	1	TANK INDICATOR	
58125882	58125882	1	FUEL FILTER	
58193362	58193362	1	PLUG	

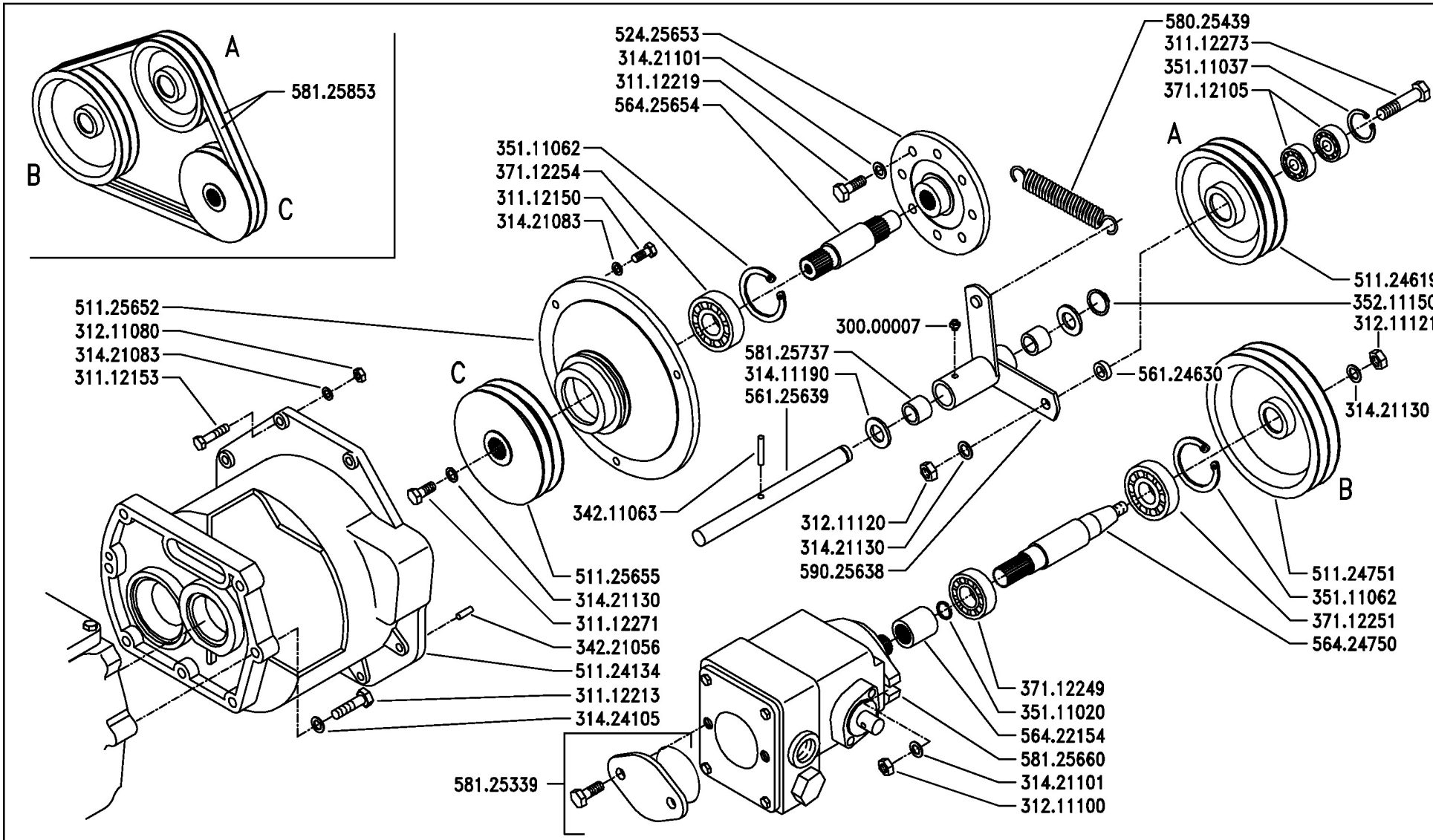

BCS

SERIE

MA.TRA

TRASMISSIONE IDROSTATICA (MT103 -MT104)

HYDROSTATIC TRANSMISSION (MT103 – MT104)

CONNEXION HYDROSTATIQUE (MT103 – MT104)

TRANSMISIÓN HIDROSTÁTICA (MT103 – MT104)

HYDROSTATISCHES GETRIEBE (MT103 – MT104)

DALLA MACCHINA
DE LA MAQUINA
DE LA MACHINE
FROM THE MACHINE
AB DER MASCHINE
N.

Sostituisce	E01/0
Sostituye	E01/0
Remplace	E01/0
Replaces	E01/0
Ersätzt	E01/0

E01

2/1999

Pos.	Code	Q.ty	Description	Notes
30000007	30000007	0	LUBRICATOR .M8x1,25 UNI 7663A	
31112150	31112150	0	SCREW TE M8X20 UNI 5739 8G	
31112153	31112153	0	SCREW TE M8X35 UNI 5739 8G	
31112213	31112213	0	SCREW TE M10X40 UNI 5739	
31112219	31112219	0	SCREW TE M10X25 UNI 5739	
31112271	31112271	0	SCREW TE M12X25 UNI 5739	
31112273	31112273	0	SCREW TE M12X50 UNI 5739	
31211080	31211080	0	NUT M8	
31211100	31211100	0	NUT M10	
31211120	31211120	0	NUT M12 UNI 5588 6S	
31211121	31211121	0	NUT M12X1,25	
31411190	31411190	0	WASHER 19x34	
31421083	31421083	0	WASHER	
31421101	31421101	0	WASHER	
31421130	31421130	0	WASHER	
31424105	31424105	0	SPRING WASHER 10,5	
34211063	34211063	0	ROLL PIN	
34221056	34221056	0	CYLINDRICAL PLUG 6X20 UNI 1707	
35111020	35111020	0	SEEGER RING	
35111037	35111037	0	SEEGER RING I 37 DIN 472	
35111062	35111062	0	SEEGER RING I 62 DIN 472	
35211150	35211150	0	SEEGER RING E 15 UNI 7434	
37112105	37112105	0	BEARING 6301-2RS (123712) SKF	
37112249	37112249	0	BEARING 6205-2RS (255215) SKF	
37112251	37112251	0	BEARING 6305-2RS (25x62x17)SKF	
37112254	37112254	1	BEARING 6305-2Z C3 (256217)SKF	
51124134	51124134	0	HYDR.TRANSMISSION HOUSING	
51124619	51124619	0	PULLEY	
51124751	51124751	0	PULLEY	
51125652	51125652	0	SHAFT FLANGE	
51125655	51125655	0	PULLEY	
52425653	52425653	0	FLANGE	
56124630	56124630	0	SPACER	
56125639	56125639	0	ROD	

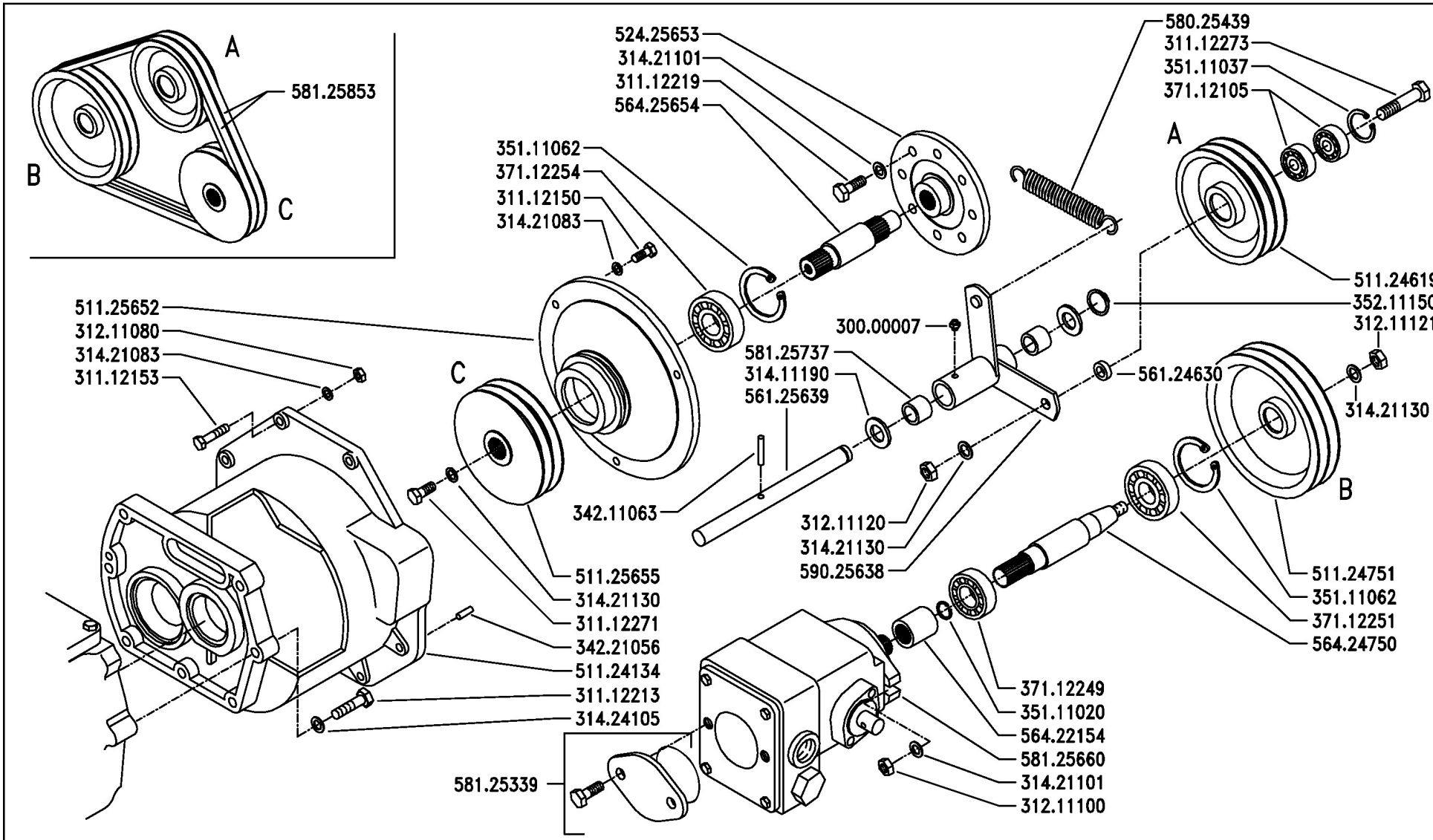

BCS

SERIE

MA.TRA

TRASMISSIONE IDROSTATICA (MT103 -MT104)

HYDROSTATIC TRANSMISSION (MT103 – MT104)

CONNEXION HYDROSTATIQUE (MT103 – MT104)

TRANSMISIÓN HIDROSTÁTICA (MT103 – MT104)

HYDROSTATISCHES GETRIEBE (MT103 – MT104)

DALLA MACCHINA
DE LA MAQUINA
DE LA MACHINE
FROM THE MACHINE
AB DER MASCHINE
N.

Sostituisce	E01/0
Sostituye	E01/0
Remplace	E01/0
Replaces	E01/0
Ersätzt	E01/0

E01

2/1999

Pos.	Code	Q.ty	Description	Notes
56422154	56422154	0	SLEEVE	
56424750	56424750	0	CONTROL SHAFT	
56425654	56425654	0	TRANSMISSION SHAFT	
58025439	58025439	0	PULLEY GUIDE SPRING	
58125339	58125339	0	KIT	
58125660	58125660	0	PUMP	
58125737	58125737	0	BUSHING	
58125853	58125853	0	V BELT	
59025638	59025638	0	PULLEY GUIDE	

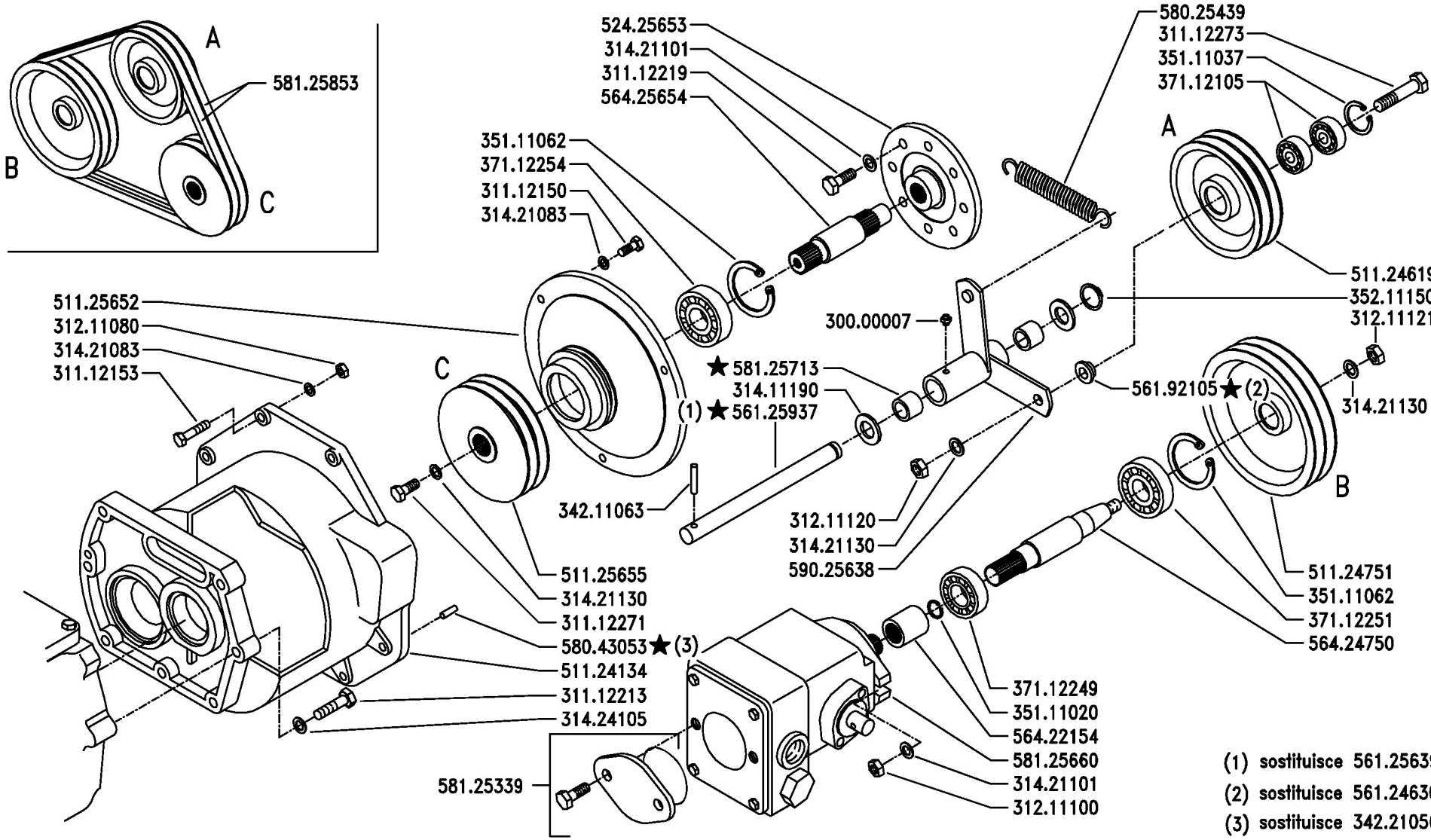

BCS

SERIE

MA.TRA

TRASMISSIONE IDROSTATICA (MT103 -MT104 - MT205)

HYDROSTATIC TRANSMISSION (MT103 – MT104 – MT205)

CONNEXION HYDROSTATIQUE (MT103 – MT104 – MT205)

TRANSMISIÓN HIDROSTÁTICA (MT103 – MT104 – MT205)

HYDROSTATISCHES GETRIEBE (MT103 – MT104 – MT205)

DALLA MACCHINA
DE LA MAQUINA
DE LA MACHINE
FROM THE MACHINE
AB DER MASCHINE

★ N. 1220

E01

1/2000

Pos.	Code	Q.ty	Description	Notes
30000007	30000007	0	LUBRICATOR .M8x1,25 UNI 7663A	
31112150	31112150	0	SCREW TE M8X20 UNI 5739 8G	
31112153	31112153	0	SCREW TE M8X35 UNI 5739 8G	
31112213	31112213	0	SCREW TE M10X40 UNI 5739	
31112219	31112219	0	SCREW TE M10X25 UNI 5739	
31112271	31112271	0	SCREW TE M12X25 UNI 5739	
31112273	31112273	0	SCREW TE M12X50 UNI 5739	
31211080	31211080	0	NUT M8	
31211100	31211100	0	NUT M10	
31211120	31211120	0	NUT M12 UNI 5588 6S	
31211121	31211121	0	NUT M12X1,25	
31411190	31411190	0	WASHER 19x34	
31421083	31421083	0	WASHER	
31421101	31421101	0	WASHER	
31421130	31421130	0	WASHER	
31424105	31424105	0	SPRING WASHER 10,5	
34211063	34211063	0	ROLL PIN	
35111020	35111020	0	SEEGER RING	
35111037	35111037	0	SEEGER RING I 37 DIN 472	
35111062	35111062	0	SEEGER RING I 62 DIN 472	
35211150	35211150	0	SEEGER RING E 15 UNI 7434	
37112105	37112105	0	BEARING 6301-2RS (123712) SKF	
37112249	37112249	0	BEARING 6205-2RS (255215) SKF	
37112251	37112251	0	BEARING 6305-2RS (25x62x17)SKF	
37112254	37112254	1	BEARING 6305-2Z C3 (256217)SKF	
51124134	51124134	0	HYDR.TRANSMISSION HOUSING	
51124619	51124619	0	PULLEY	
51124751	51124751	0	PULLEY	
51125652	51125652	0	SHAFT FLANGE	
51125655	51125655	0	PULLEY	
52425653	52425653	0	FLANGE	
56125937	56125937	0	CODICE ERRATO VEDI 56325937	
56192105	56192105	0	SPACER	
56422154	56422154	0	SLEEVE	

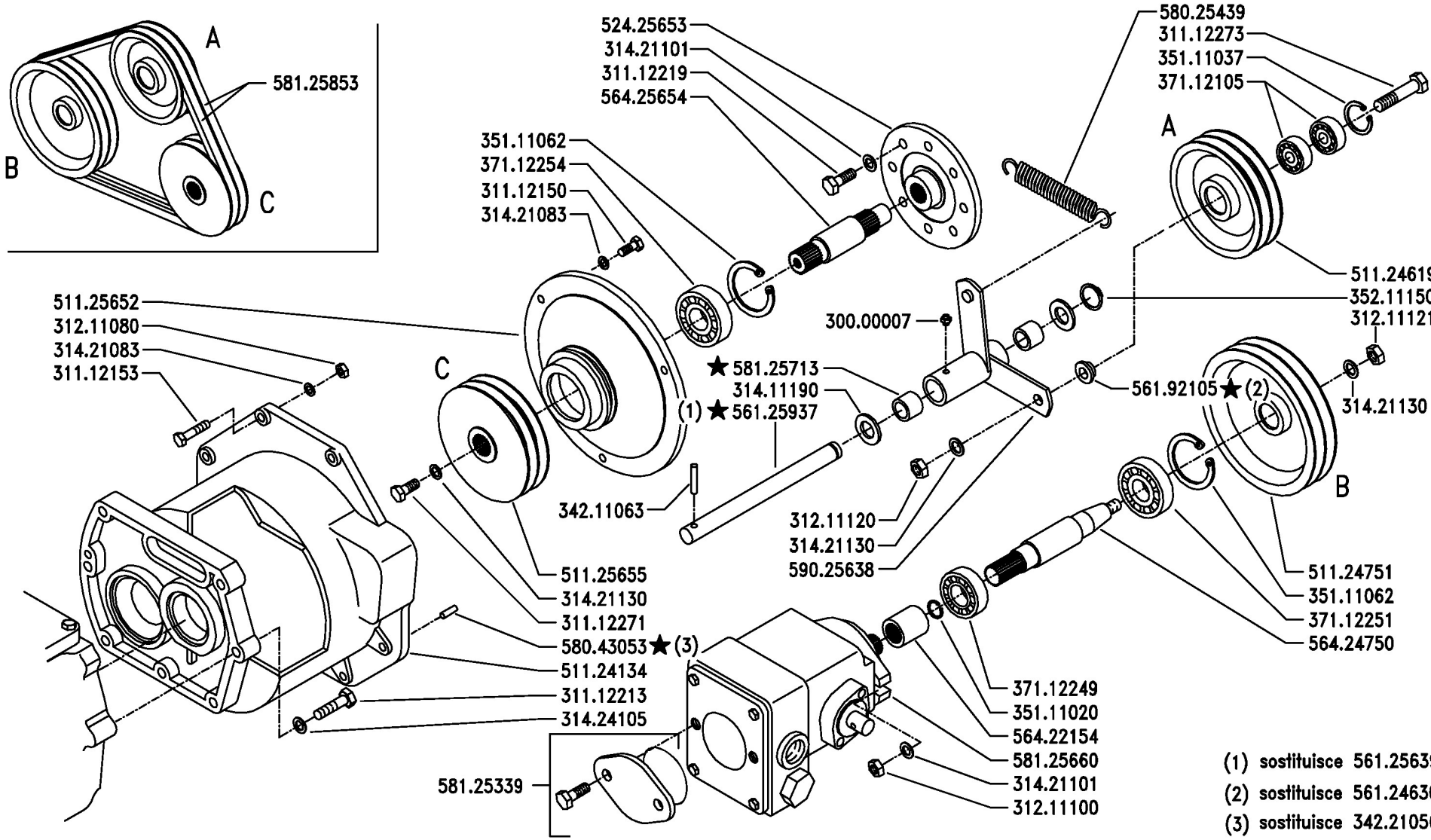

BCS

SERIE

MA.TRA

TRASMISSIONE IDROSTATICA (MT103 -MT104 - MT205)

HYDROSTATIC TRANSMISSION (MT103 – MT104 – MT205)

CONNEXION HYDROSTATIQUE (MT103 – MT104 – MT205)

TRANSMISIÓN HIDROSTÁTICA (MT103 – MT104 – MT205)

HYDROSTATISCHES GETRIEBE (MT103 – MT104 – MT205)

DALLA MACCHINA
DE LA MAQUINA
DE LA MACHINE
FROM THE MACHINE
AB DER MASCHINE

★ N. 1220

E01

1/2000

Pos.	Code	Q.ty	Description	Notes
56424750	56424750	0	CONTROL SHAFT	
56425654	56425654	0	TRANSMISSION SHAFT	
58025439	58025439	0	PULLEY GUIDE SPRING	
58043053	58043053	0	CYLINDRICAL PLUG	
58125339	58125339	0	KIT	
58125660	58125660	0	PUMP	
58125713	58125713	0	BUSHING	
58125853	58125853	0	V BELT	
59025638	59025638	0	PULLEY GUIDE	

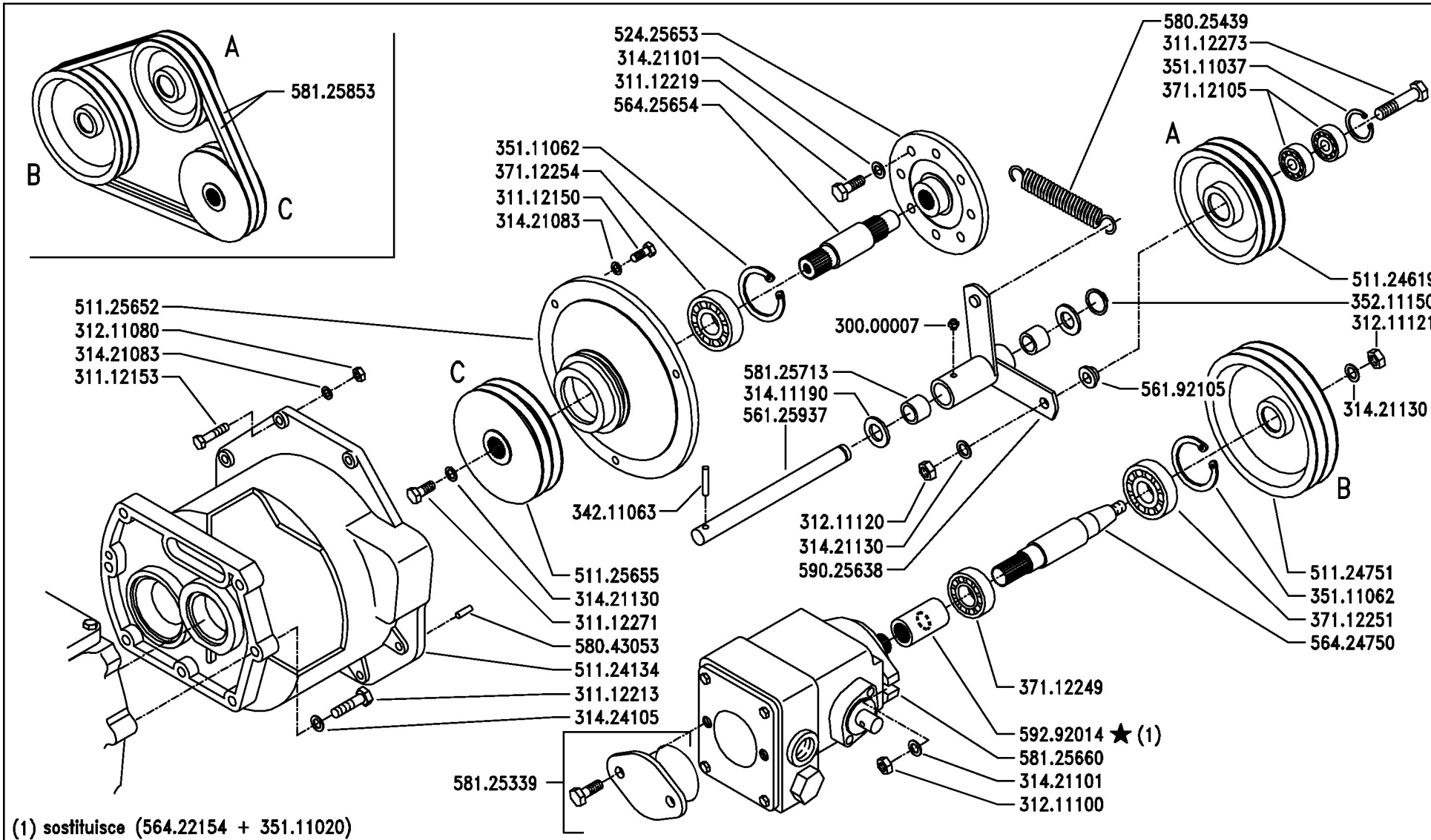

(1) sostituisce (564.22154 + 351.11020)

BCS

SERIE

MA.TRA

TRASMISSIONE IDROSTATICA (MT103 -MT104 - MT205)

HYDROSTATIC TRANSMISSION (MT103 – MT104 – MT205)

CONNEXION HYDROSTATIQUE (MT103 – MT104 – MT205)

TRANSMISIÓN HIDROSTÁTICA (MT103 – MT104 – MT205)

HYDROSTATISCHES GETRIEBE (MT103 – MT104 – MT205)

DALLA MACCHINA
DE LA MAQUINA
DE LA MACHINE
FROM THE MACHINE
AB DER MASCHINE

★ N. 1616

E01

10/200

Pos.	Code	Q.ty	Description	Notes
30000007	30000007	0	LUBRICATOR .M8x1,25 UNI 7663A	
31112150	31112150	0	SCREW TE M8X20 UNI 5739 8G	
31112153	31112153	0	SCREW TE M8X35 UNI 5739 8G	
31112213	31112213	0	SCREW TE M10X40 UNI 5739	
31112219	31112219	0	SCREW TE M10X25 UNI 5739	
31112271	31112271	0	SCREW TE M12X25 UNI 5739	
31112273	31112273	0	SCREW TE M12X50 UNI 5739	
31211080	31211080	0	NUT M8	
31211100	31211100	0	NUT M10	
31211120	31211120	0	NUT M12 UNI 5588 6S	
31211121	31211121	0	NUT M12X1,25	
31411190	31411190	0	WASHER 19x34	
31421083	31421083	0	WASHER	
31421101	31421101	0	WASHER	
31421130	31421130	0	WASHER	
31424105	31424105	0	SPRING WASHER 10,5	
34211063	34211063	0	ROLL PIN	
35111037	35111037	0	SEEGER RING I 37 DIN 472	
35111062	35111062	0	SEEGER RING I 62 DIN 472	
35211150	35211150	0	SEEGER RING E 15 UNI 7434	
37112105	37112105	0	BEARING 6301-2RS (123712) SKF	
37112249	37112249	0	BEARING 6205-2RS (255215) SKF	
37112251	37112251	0	BEARING 6305-2RS (25x62x17)SKF	
37112254	37112254	1	BEARING 6305-2Z C3 (256217)SKF	
51124134	51124134	0	HYDR.TRANSMISSION HOUSING	
51124619	51124619	0	PULLEY	
51124751	51124751	0	PULLEY	
51125652	51125652	0	SHAFT FLANGE	
51125655	51125655	0	PULLEY	
52425653	52425653	0	FLANGE	
56125937	56125937	0	CODICE ERRATO VEDI 56325937	
56192105	56192105	0	SPACER	
56424750	56424750	0	CONTROL SHAFT	
56425654	56425654	0	TRANSMISSION SHAFT	

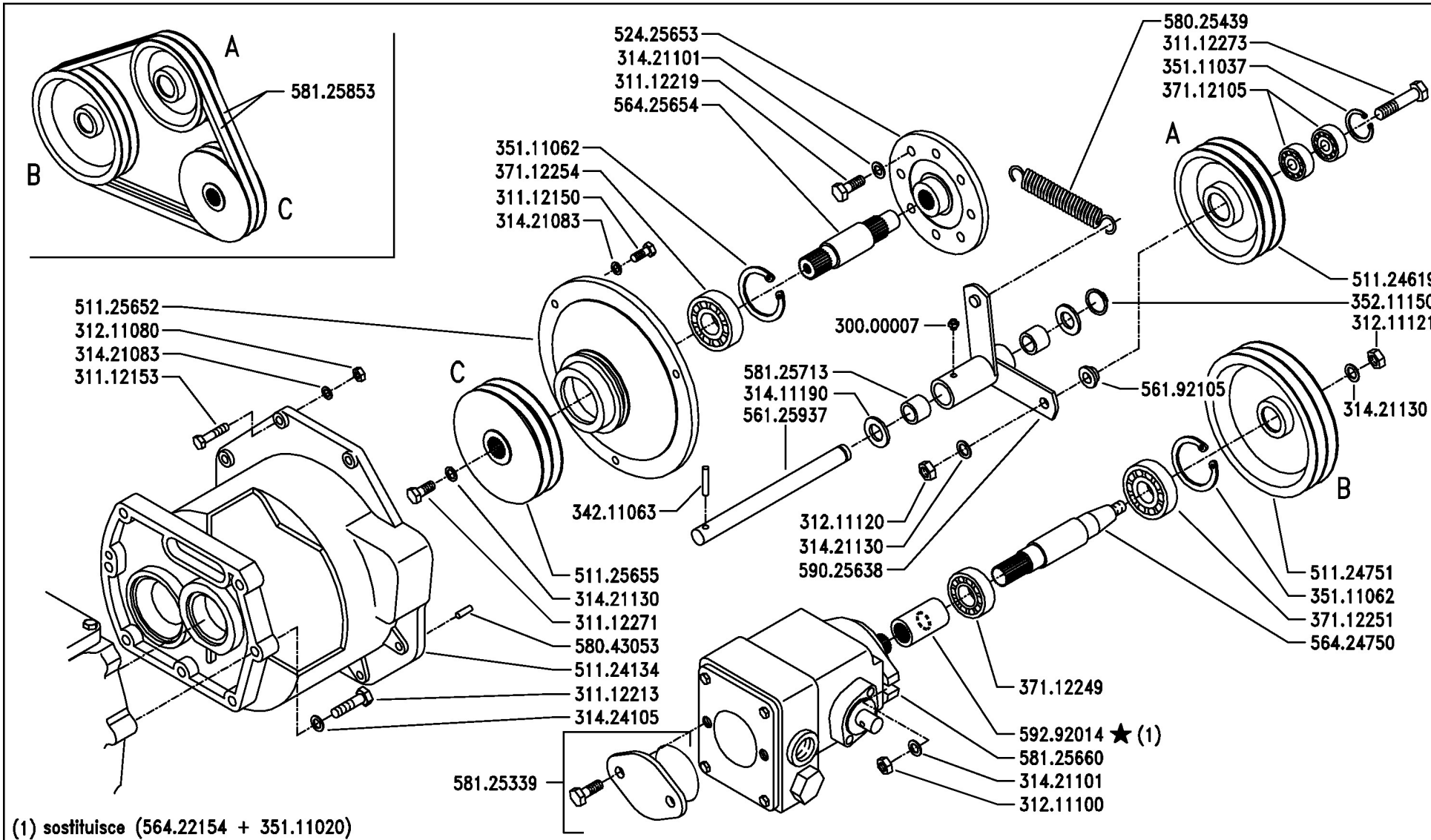

(1) sostituisce (564.22154 + 351.11020)

BCS

SERIE

MA.TRA

TRASMISSIONE IDROSTATICA (MT103 -MT104 - MT205)

HYDROSTATIC TRANSMISSION (MT103 – MT104 – MT205)

CONNEXION HYDROSTATIQUE (MT103 – MT104 – MT205)

TRANSMISIÓN HIDROSTÁTICA (MT103 – MT104 – MT205)

HYDROSTATISCHES GETRIEBE (MT103 – MT104 – MT205)

DALLA MACCHINA
DE LA MAQUINA
DE LA MACHINE
FROM THE MACHINE
AB DER MASCHINE

★ N. 1616

E01

10/200

Pos.	Code	Q.ty	Description	Notes
58025439	58025439	0	PULLEY GUIDE SPRING	
58043053	58043053	0	CYLINDRICAL PLUG	
58125339	58125339	0	KIT	
58125660	58125660	0	PUMP	
58125713	58125713	0	BUSHING	
58125853	58125853	0	V BELT	
59025638	59025638	0	PULLEY GUIDE	
59292014	59292014	0	SLEEVE	

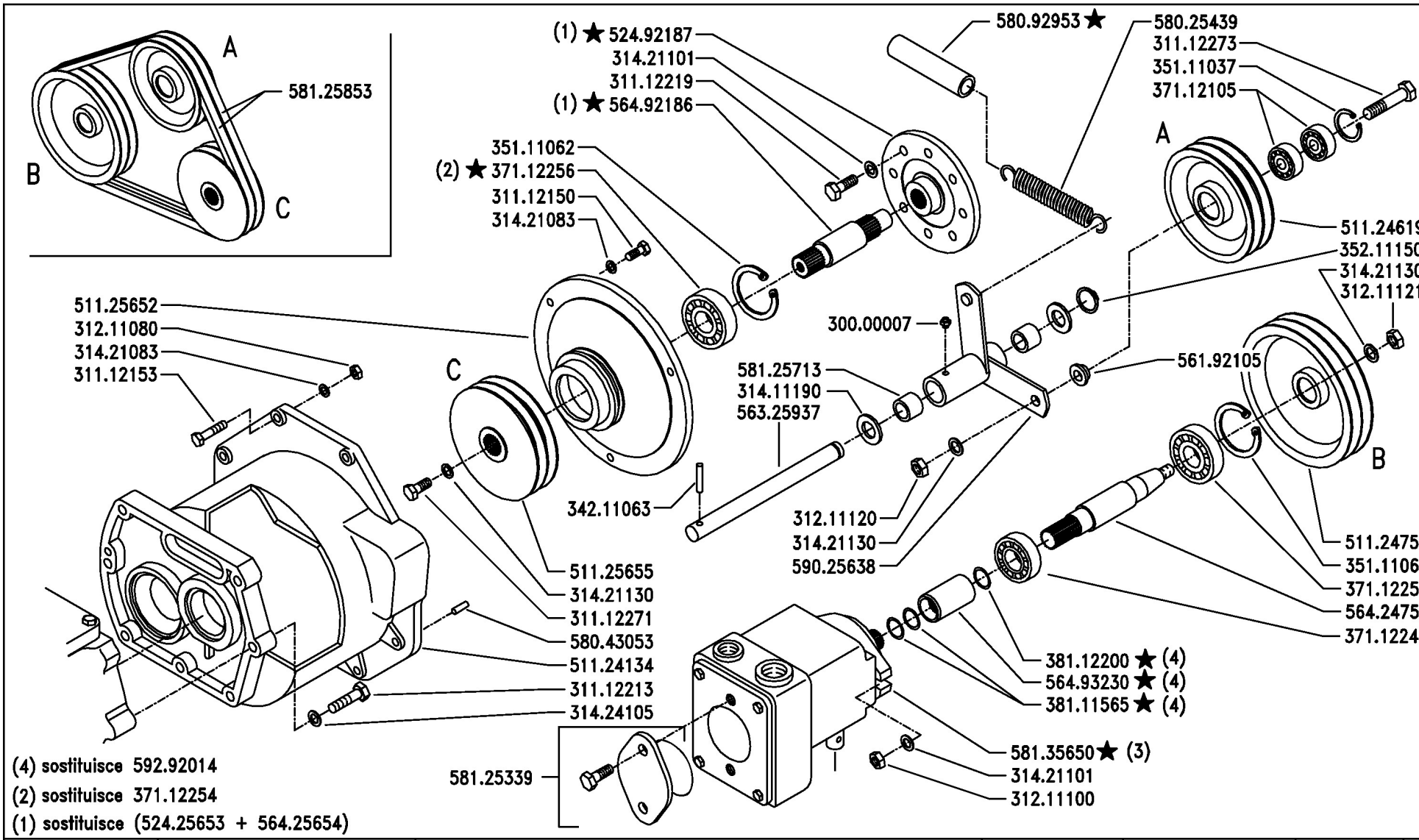

BCS	SERIE MA.TRA	TRASMISSIONE IDROSTATICA (MT103 -MT104 - MT205) HYDROSTATIC TRANSMISSION (MT103 – MT104 – MT205) CONNEXION HYDROSTATIQUE (MT103 – MT104 – MT205) TRANSMISIÓN HIDROSTÁTICA (MT103 – MT104 – MT205) HYDROSTATISCHES GETRIEBE (MT103 – MT104 – MT205)	DALLA MACCHINA DE LA MAQUINA DE LA MACHINE FROM THE MACHINE AB DER MASCHINE ★ N.	(3) 706475 (2) 708844 (1) 703223	E01 11/2004

Pos.	Code	Q.ty	Description	Notes
30000007	30000007	1	LUBRICATOR .M8x1,25 UNI 7663A	
31112150	31112150	1	SCREW TE M8X20 UNI 5739 8G	
31112153	31112153	1	SCREW TE M8X35 UNI 5739 8G	
31112213	31112213	1	SCREW TE M10X40 UNI 5739	
31112219	31112219	1	SCREW TE M10X25 UNI 5739	
31112271	31112271	1	SCREW TE M12X25 UNI 5739	
31112273	31112273	1	SCREW TE M12X50 UNI 5739	
31211080	31211080	1	NUT M8	
31211100	31211100	1	NUT M10	
31211120	31211120	1	NUT M12 UNI 5588 6S	
31211121	31211121	1	NUT M12X1,25	
31411190	31411190	1	WASHER 19x34	
31421083	31421083	1	WASHER	
31421101	31421101	1	WASHER	
31421130	31421130	1	WASHER	
31424105	31424105	1	SPRING WASHER 10,5	
34211063	34211063	1	ROLL PIN	
35111037	35111037	1	SEEGER RING I 37 DIN 472	
35111062	35111062	1	SEEGER RING I 62 DIN 472	
35211150	35211150	1	SEEGER RING E 15 UNI 7434	
37112105	37112105	1	BEARING 6301-2RS (123712) SKF	
37112249	37112249	1	BEARING 6205-2RS (255215) SKF	
37112251	37112251	1	BEARING 6305-2RS (25x62x17)SKF	
37112256	37112256	1	BEARING 6305-2RS1C3(256217)SKF	
38111565	38111565	1	O-RING ORM 0180-30	
38112200	38112200	1	O-RING 3087 (22,00X2,62)	
51124134	51124134	1	HYDR.TRANSMISSION HOUSING	
51124619	51124619	1	PULLEY	
51124751	51124751	1	PULLEY	
51125652	51125652	1	SHAFT FLANGE	
51125655	51125655	1	PULLEY	
52492187	52492187	1	FLANGE	
56192105	56192105	1	SPACER	
56325937	56325937	1	ROD	

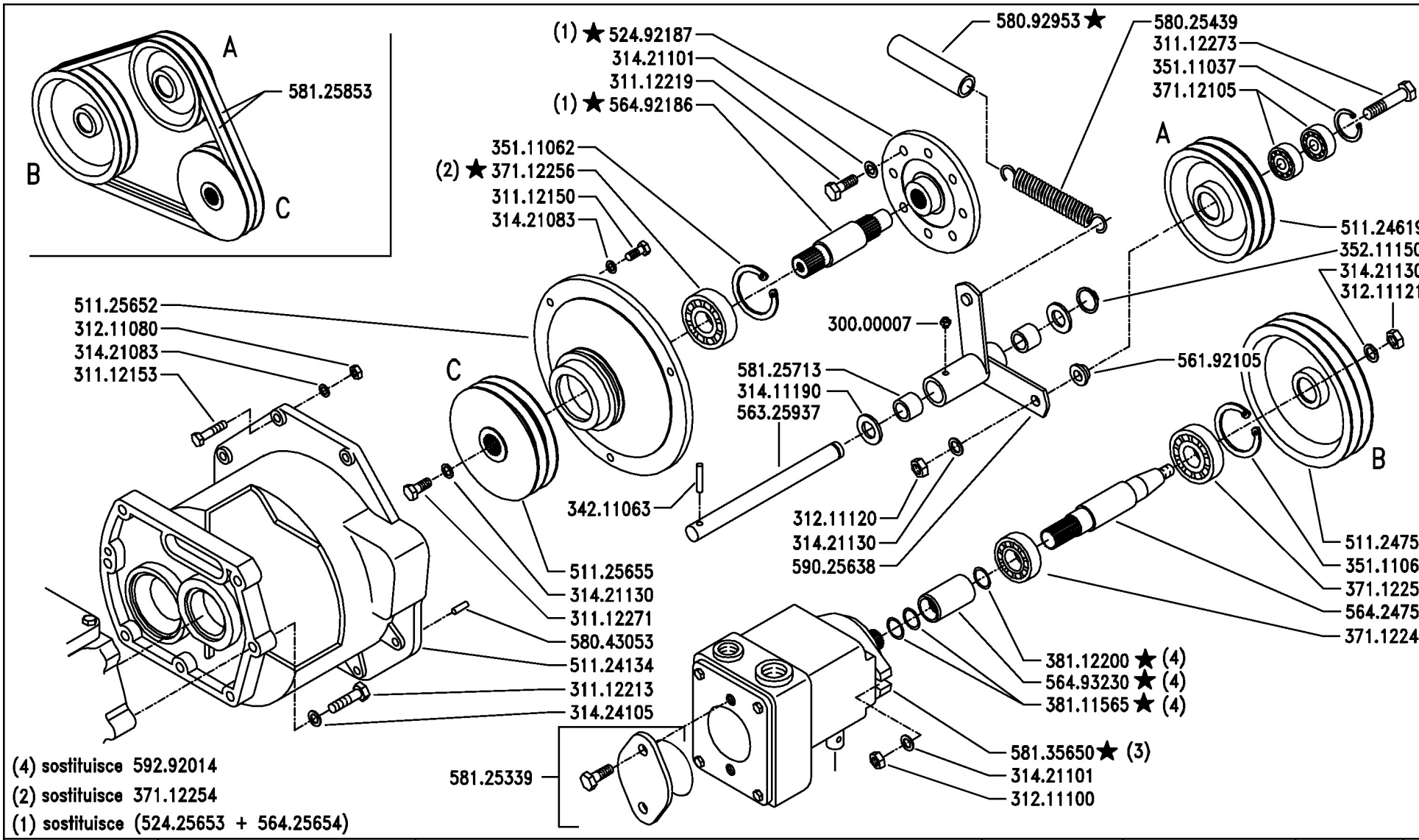

BCS	SERIE MA.TRA	TRASMISSIONE IDROSTATICA (MT103 -MT104 - MT205) HYDROSTATIC TRANSMISSION (MT103 – MT104 – MT205) CONNEXION HYDROSTATIQUE (MT103 – MT104 – MT205) TRANSMISIÓN HIDROSTÁTICA (MT103 – MT104 – MT205) HYDROSTATISCHES GETRIEBE (MT103 – MT104 – MT205)	DALLA MACCHINA DE LA MAQUINA DE LA MACHINE FROM THE MACHINE AB DER MASCHINE ★ N.	(3) 706475 (2) 708844 (1) 703223	E01 11/2004

Pos.	Code	Q.ty	Description	Notes
56424750	56424750	1	CONTROL SHAFT	
56492186	56492186	1	TRANSMISSION SHAFT	
56493230	56493230	1	SLEEVE 75mm	
58025439	58025439	1	PULLEY GUIDE SPRING	
58043053	58043053	1	CYLINDRICAL PLUG	
58092953	58092953	1	RUBBER HOSE	
58125339	58125339	1	KIT	
58125713	58125713	1	BUSHING	
58125853	58125853	1	V BELT	
58135650	58135650	1	PUMP	
59025638	59025638	1	PULLEY GUIDE	

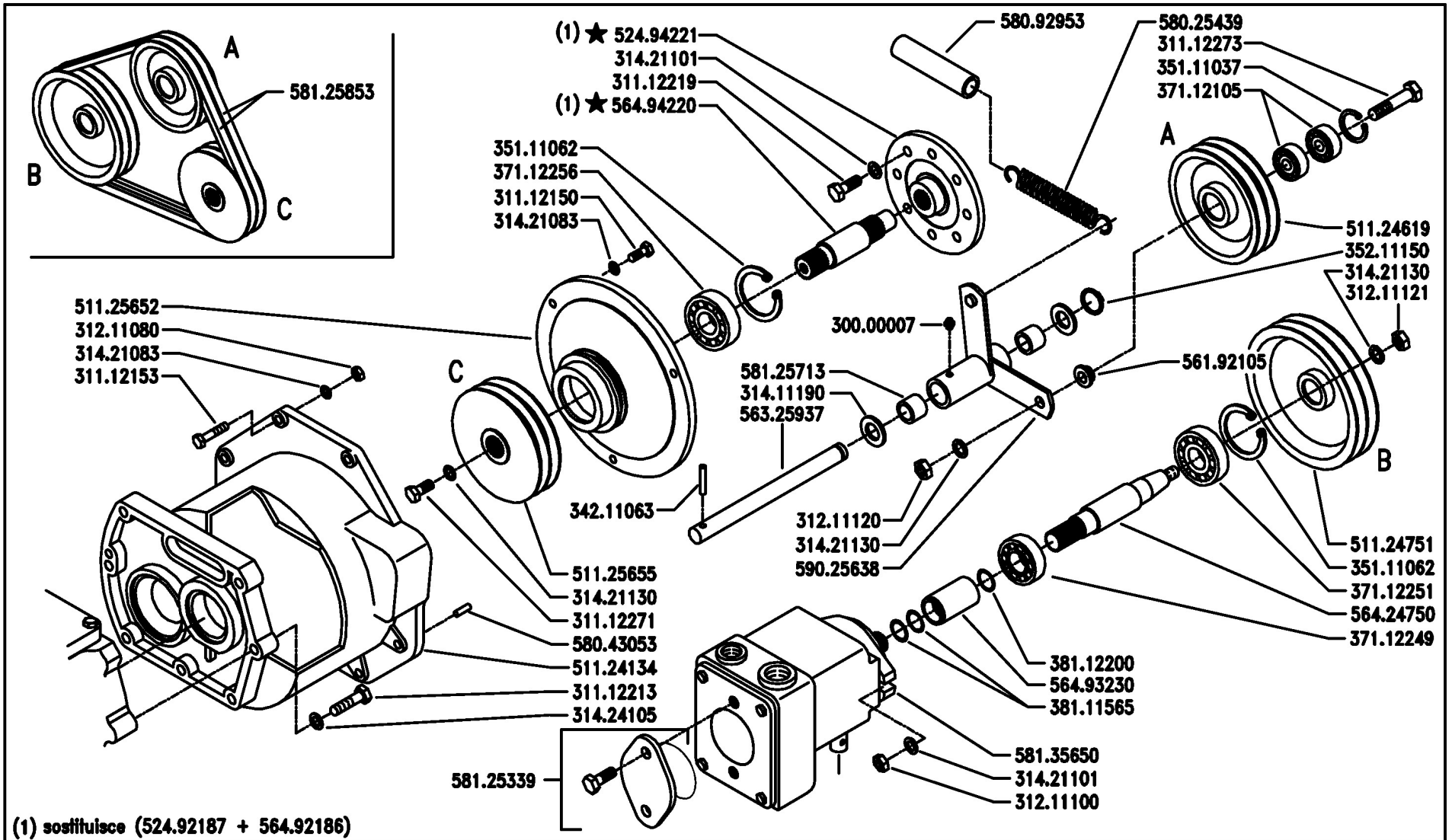

BCS

SERIE

MA.TRA

TRASMISSIONE IDROSTATICA (MT103 -MT104 - MT205)

HYDROSTATIC TRANSMISSION (MT103 - MT104 - MT205)

CONNEXION HYDROSTATIQUE (MT103 - MT104 - MT205)

TRANSMISIÓN HIDROSTÁTICA (MT103 - MT104 - MT205)

HYDROSTATISCHES GETRIEBE (MT103 - MT104 - MT205)

DALLA MACCHINA
DE LA MAQUINA
DE LA MACHINE
FROM THE MACHINE
AB DER MASCHINE

★ N. 772574

E01

Rev. 5

09/2006

Pos.	Code	Q.ty	Description	Notes
30000007	30000007	0	LUBRICATOR .M8x1,25 UNI 7663A	
31112150	31112150	0	SCREW TE M8X20 UNI 5739 8G	
31112153	31112153	0	SCREW TE M8X35 UNI 5739 8G	
31112213	31112213	0	SCREW TE M10X40 UNI 5739	
31112219	31112219	0	SCREW TE M10X25 UNI 5739	
31112271	31112271	0	SCREW TE M12X25 UNI 5739	
31112273	31112273	0	SCREW TE M12X50 UNI 5739	
31211080	31211080	0	NUT M8	
31211100	31211100	0	NUT M10	
31211120	31211120	0	NUT M12 UNI 5588 6S	
31211121	31211121	0	NUT M12X1,25	
31411190	31411190	0	WASHER 19x34	
31421083	31421083	0	WASHER	
31421101	31421101	0	WASHER	
31421130	31421130	0	WASHER	
31424105	31424105	0	SPRING WASHER 10,5	
34211063	34211063	0	ROLL PIN	
35111037	35111037	0	SEEGER RING I 37 DIN 472	
35111062	35111062	0	SEEGER RING I 62 DIN 472	
35211150	35211150	0	SEEGER RING E 15 UNI 7434	
37112105	37112105	0	BEARING 6301-2RS (123712) SKF	
37112249	37112249	0	BEARING 6205-2RS (255215) SKF	
37112251	37112251	0	BEARING 6305-2RS (25x62x17)SKF	
37112256	37112256	0	BEARING 6305-2RS1C3(256217)SKF	
38111565	38111565	0	O-RING ORM 0180-30	
38112200	38112200	0	O-RING 3087 (22,00X2,62)	
51124134	51124134	0	HYDR.TRANSMISSION HOUSING	
51124619	51124619	0	PULLEY	
51124751	51124751	0	PULLEY	
51125652	51125652	0	SHAFT FLANGE	
51125655	51125655	0	PULLEY	
52494221	52494221	1	FLANGE	
56192105	56192105	0	SPACER	
56325937	56325937	0	ROD	

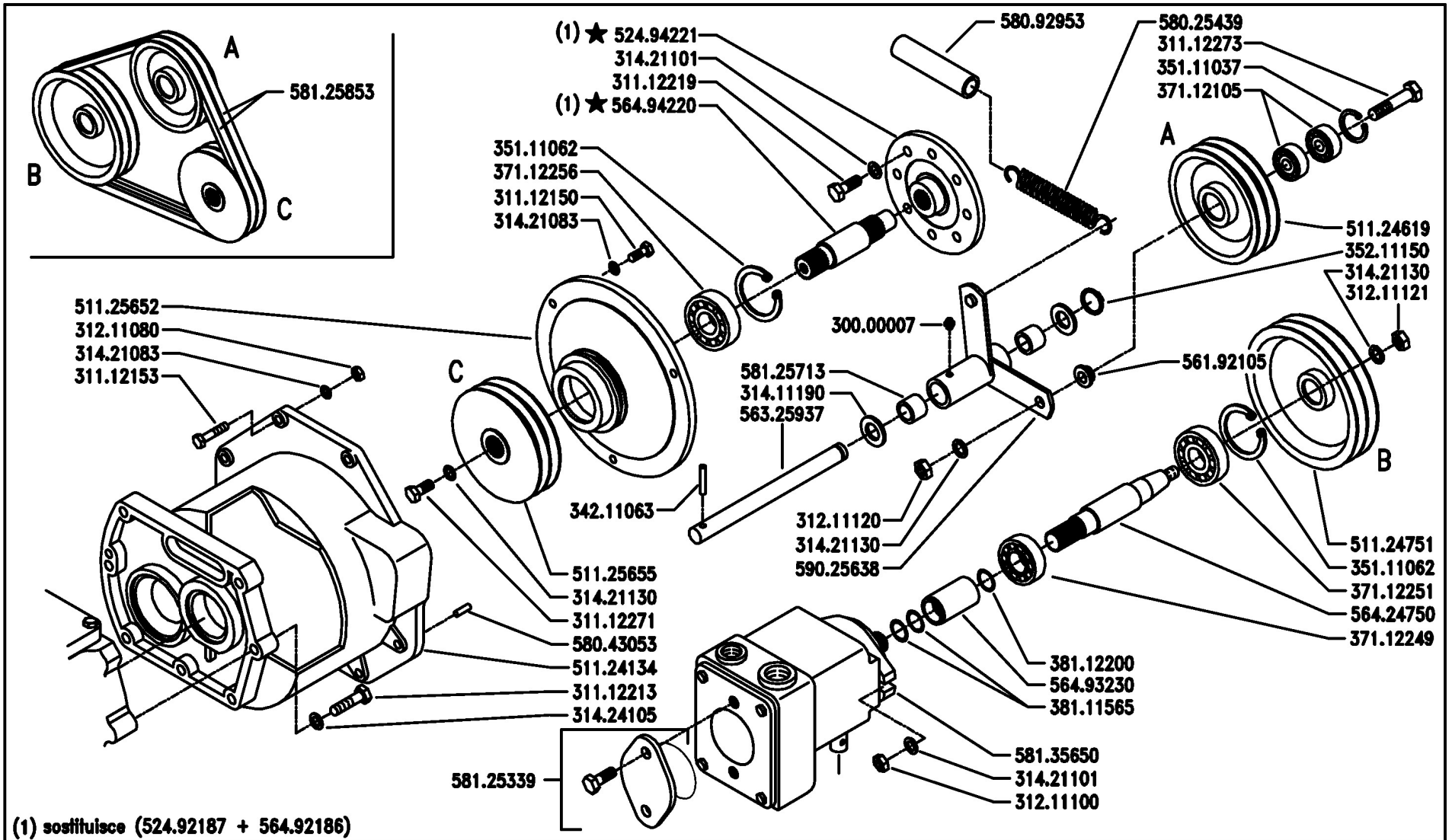

BCS

SERIE

MA.TRA

TRASMISSIONE IDROSTATICA (MT103 -MT104 - MT205)

HYDROSTATIC TRANSMISSION (MT103 - MT104 - MT205)

CONNEXION HYDROSTATIQUE (MT103 - MT104 - MT205)

TRANSMISIÓN HIDROSTÁTICA (MT103 - MT104 - MT205)

HYDROSTATISCHES GETRIEBE (MT103 - MT104 - MT205)

DALLA MACCHINA
DE LA MAQUINA
DE LA MACHINE
FROM THE MACHINE
AB DER MASCHINE

★ N. 772574

E01

Rev. 5

09/2006

Pos.	Code	Q.ty	Description	Notes
56424750	56424750	0	CONTROL SHAFT	
56493230	56493230	0	SLEEVE 75mm	
56494220	56494220	1	TRANSMISSION SHAFT	
58025439	58025439	0	PULLEY GUIDE SPRING	
58043053	58043053	0	CYLINDRICAL PLUG	
58092953	58092953	0	RUBBER HOSE	
58125339	58125339	0	KIT	
58125713	58125713	0	BUSHING	
58125853	58125853	0	V BELT	
58135650	58135650	0	PUMP	
59025638	59025638	0	PULLEY GUIDE	

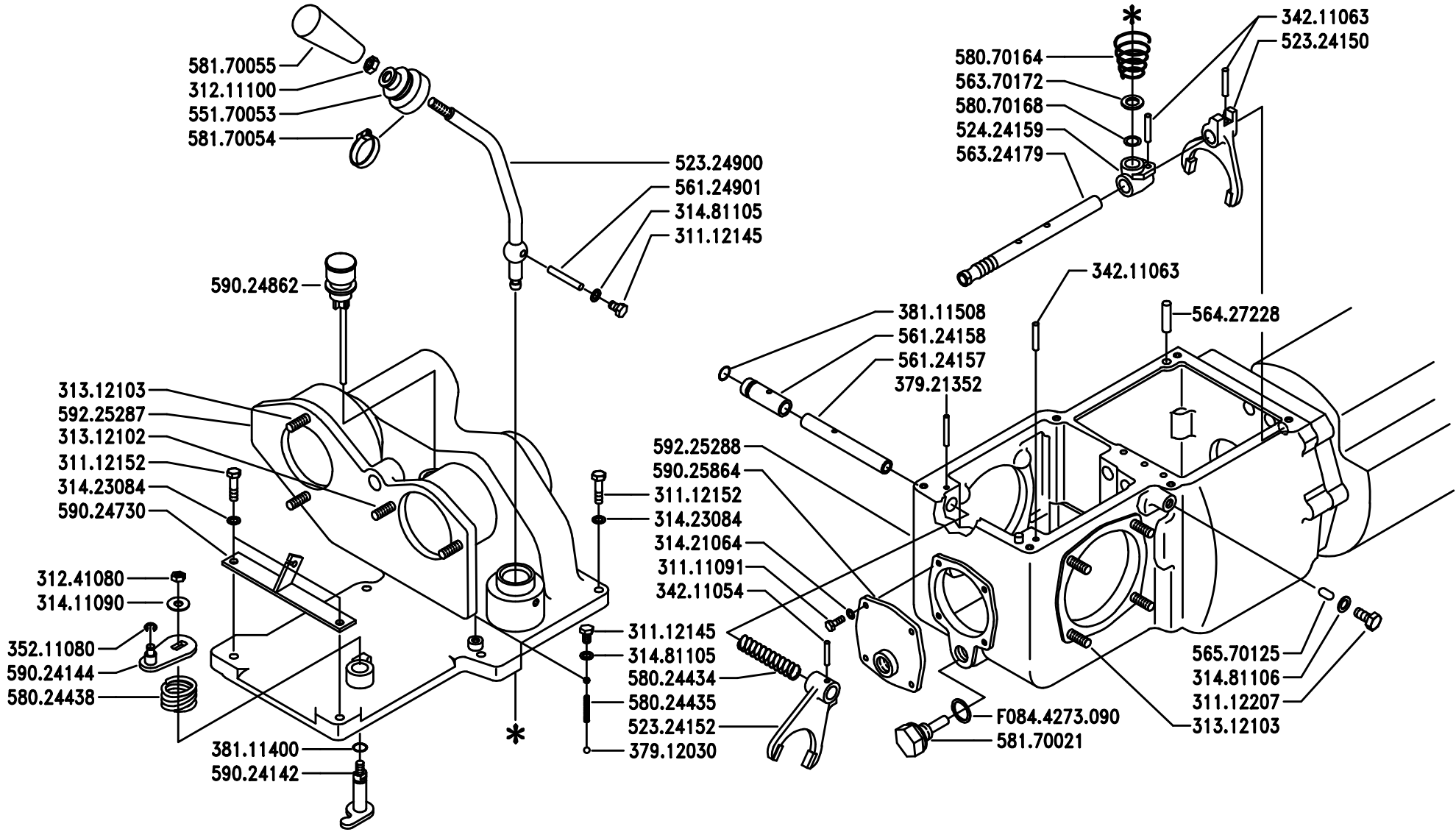

BCS	SERIE MA.TRA	SCATOLA CAMBIO (MT103 – MT104) GEAR BOX (MT103 – MT104) CAJA DE CAMBIOS (MT103 – MT104) BOÎTE DE CHANGEMENT DE VITESSE (MT103 – MT104) GETRIEBEGEHÄUSE (MT103 – MT104)	DALLA MACCHINA DE LA MAQUINA DE LA MACHINE FROM THE MACHINE AB DER MASCHINE N.	Sostituisce F02/0 Sostituye F02/0 Remplace F02/0 Replaces F02/0 Ersätzt F02/0	F02	2/199

Pos.	Code	Q.ty	Description	Notes
31111091	31111091	0	SCREW E M6X14 UNI 5739 8G	
31112145	31112145	0	SCREW TE M8X10 UNI 5739 8G	
31112152	31112152	0	SCREW TE M8X30 UNI 5739 8G	
31112207	31112207	0	SCREW TE M10X14 UNI 5739	
31211100	31211100	0	NUT M10	
31241080	31241080	0	HEXAGON SELFLOCK NUT M8	
31312102	31312102	0	STUD BOLT M10X40X24X12	
31312103	31312103	0	STUD BOLT M10X46X24X16	
31411090	31411090	0	WASHER 9x24	
31421064	31421064	0	WASHER	
31423084	31423084	0	SPRING WASHER 8,4	
31481105	31481105	0	WASHER 8,4x14 UNI6592	
31481106	31481106	0	WASHER 10,5x21 U6592	
34211054	34211054	0	ROLL PIN	
34211063	34211063	0	ROLL PIN	
35211080	35211080	0	SEEGER RING E 8 UNI 7434	
37912030	37912030	0	BALL 6,5 RB	
37921352	37921352	0	ROLLER B5X39,8 G2 FAG	
38111400	38111400	0	O-RING (14,00X1,78)	
38111508	38111508	0	O-RING 119 (15,08x2,62)	
52324150	52324150	0	GEAR FORK	
52324152	52324152	0	SELECTOR FORK	
52324900	52324900	0	COMMAND LEVER	
52424159	52424159	0	CATCH	
55170053	55170053	0	CAP	
56124157	56124157	0	ROD	
56124158	56124158	0	SLEEVE	
56124901	56124901	0	LEVER PIN	
56324179	56324179	0	PULL ROD	
56370172	56370172	0	SPACER D.14x24x2,5 8.8	
56427228	56427228	0	PIN	
56570125	56570125	0	TOGGLE	
58024434	58024434	0	SPRING	
58024435	58024435	0	SPRING	

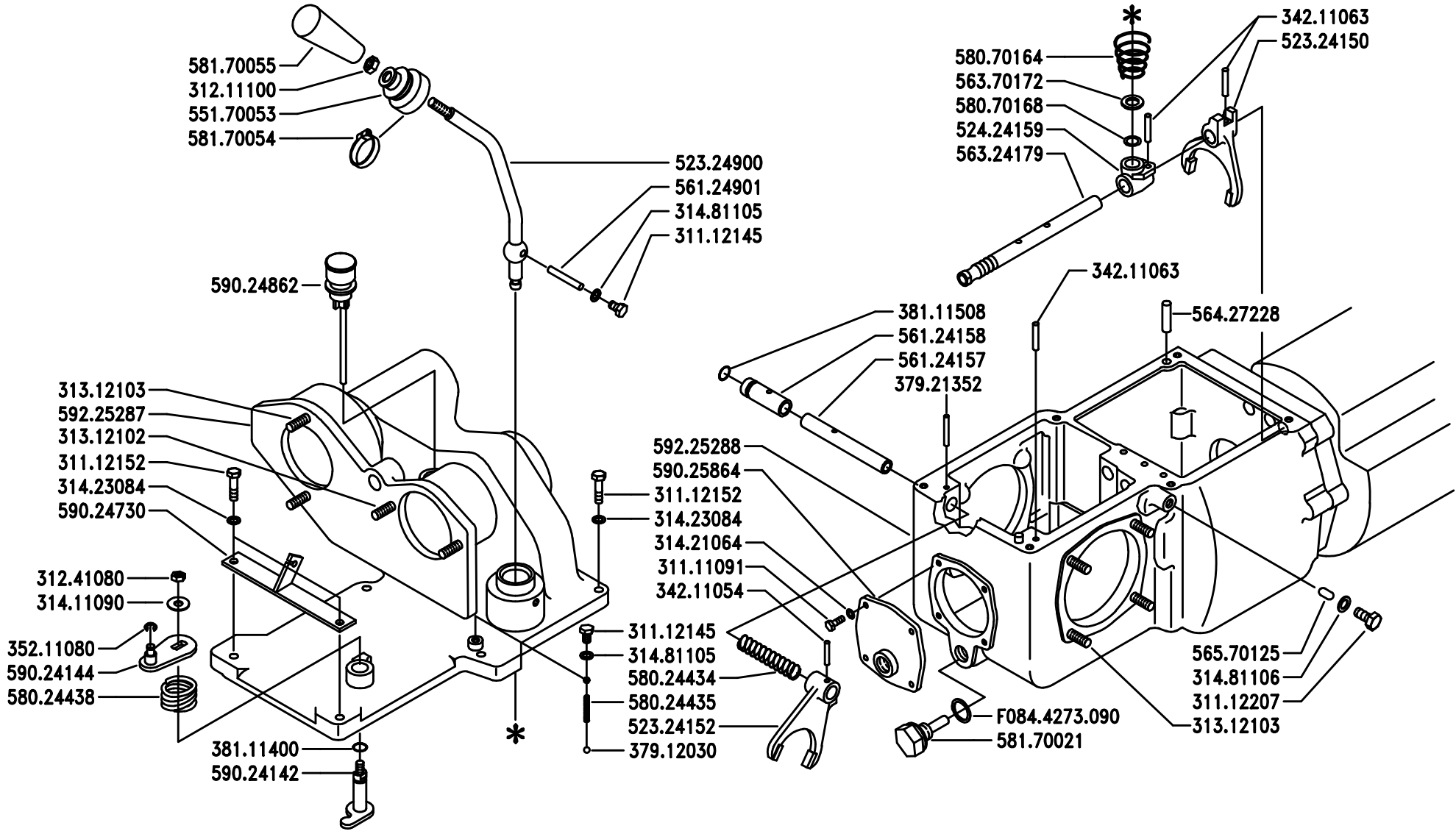

BCS	SERIE MA.TRA	SCATOLA CAMBIO (MT103 – MT104) GEAR BOX (MT103 – MT104) CAJA DE CAMBIOS (MT103 – MT104) BOÎTE DE CHANGEMENT DE VITESSE (MT103 – MT104) GETRIEBEGEHÄUSE (MT103 – MT104)	DALLA MACCHINA DE LA MAQUINA DE LA MACHINE FROM THE MACHINE AB DER MASCHINE N.	Sostituisce F02/0 Sostituye F02/0 Remplace F02/0 Replaces F02/0 Ersätzt F02/0	F02 2/199

Pos.	Code	Q.ty	Description	Notes
58024438	58024438	0	RESTORING SPRING	
58070164	58070164	0	SPRING	
58070168	58070168	0	LOCKRING	
58170021	58170021	0	PLUG	
58170054	58170054	0	COLLAR	
58170055	58170055	0	HANDLE	
59024142	59024142	0	SMALL LEVER	
59024144	59024144	0	SMALL LEVER	
59024730	59024730	0	SMALL PLATE	
59024862	59024862	0	PLUG	
59025864	59025864	0	REAR COVER	
59225287	59225287	0	GEARBOX HOUSING COVER	
59225288	59225288	0	GEAR BOX	
F0844273	F0844273090	0	GASKET 22X28X1,5 CU 99,5	

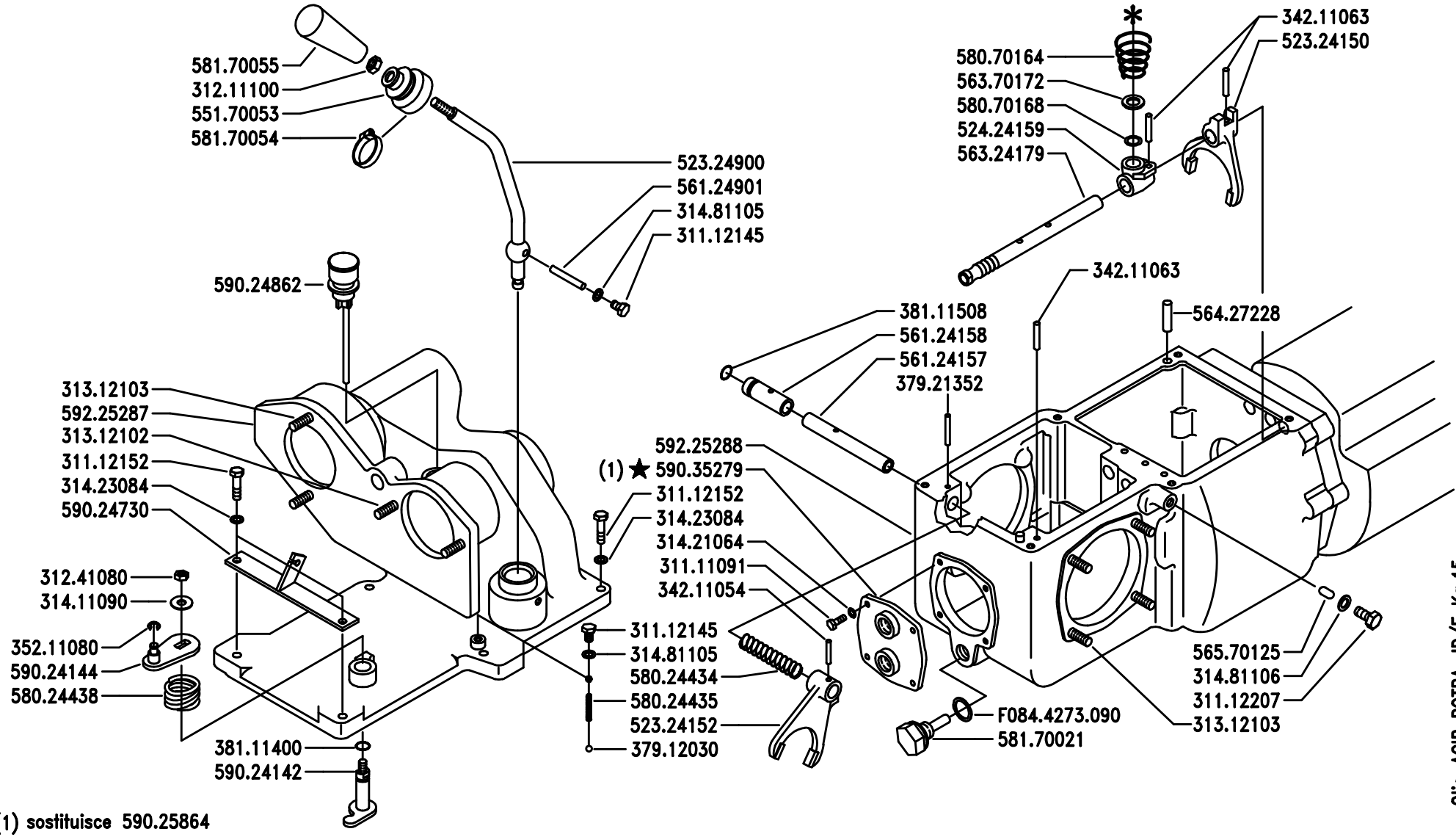

BCS	SERIE MA.TRA	SCATOLA CAMBIO (MT103 – MT104 – MT205) GEAR BOX (MT103 – MT104 – MT205) BOÎTE DE CHANGEMENT DE VITESSE (MT103 – MT104 – MT205) CAJA DE CAMBIOS (MT103 – MT104 – MT205) GETRIEBEGEHÄUSE (MT103 – MT104 – MT205)	DALLA MACCHINA DE LA MAQUINA DE LA MACHINE FROM THE MACHINE AB DER MASCHINE ★ N.	1240	F02 10/199

Pos.	Code	Q.ty	Description	Notes
31111091	31111091	0	SCREW E M6X14 UNI 5739 8G	
31112145	31112145	0	SCREW TE M8X10 UNI 5739 8G	
31112152	31112152	0	SCREW TE M8X30 UNI 5739 8G	
31112207	31112207	0	SCREW TE M10X14 UNI 5739	
31211100	31211100	0	NUT M10	
31241080	31241080	0	HEXAGON SELFLOCK NUT M8	
31312102	31312102	0	STUD BOLT M10X40X24X12	
31312103	31312103	0	STUD BOLT M10X46X24X16	
31411090	31411090	0	WASHER 9x24	
31421064	31421064	0	WASHER	
31423084	31423084	0	SPRING WASHER 8,4	
31481105	31481105	0	WASHER 8,4x14 UNI6592	
31481106	31481106	0	WASHER 10,5x21 U6592	
34211054	34211054	0	ROLL PIN	
34211063	34211063	0	ROLL PIN	
35211080	35211080	0	SEEGER RING E 8 UNI 7434	
37912030	37912030	0	BALL 6,5 RB	
37921352	37921352	0	ROLLER B5X39,8 G2 FAG	
38111400	38111400	0	O-RING (14,00X1,78)	
38111508	38111508	0	O-RING 119 (15,08x2,62)	
52324150	52324150	0	GEAR FORK	
52324152	52324152	0	SELECTOR FORK	
52324900	52324900	0	COMMAND LEVER	
52424159	52424159	0	CATCH	
55170053	55170053	0	CAP	
56124157	56124157	0	ROD	
56124158	56124158	0	SLEEVE	
56124901	56124901	0	LEVER PIN	
56324179	56324179	0	PULL ROD	
56370172	56370172	0	SPACER D.14x24x2,5 8.8	
56427228	56427228	0	PIN	
56570125	56570125	0	TOGGLE	
58024434	58024434	0	SPRING	
58024435	58024435	0	SPRING	

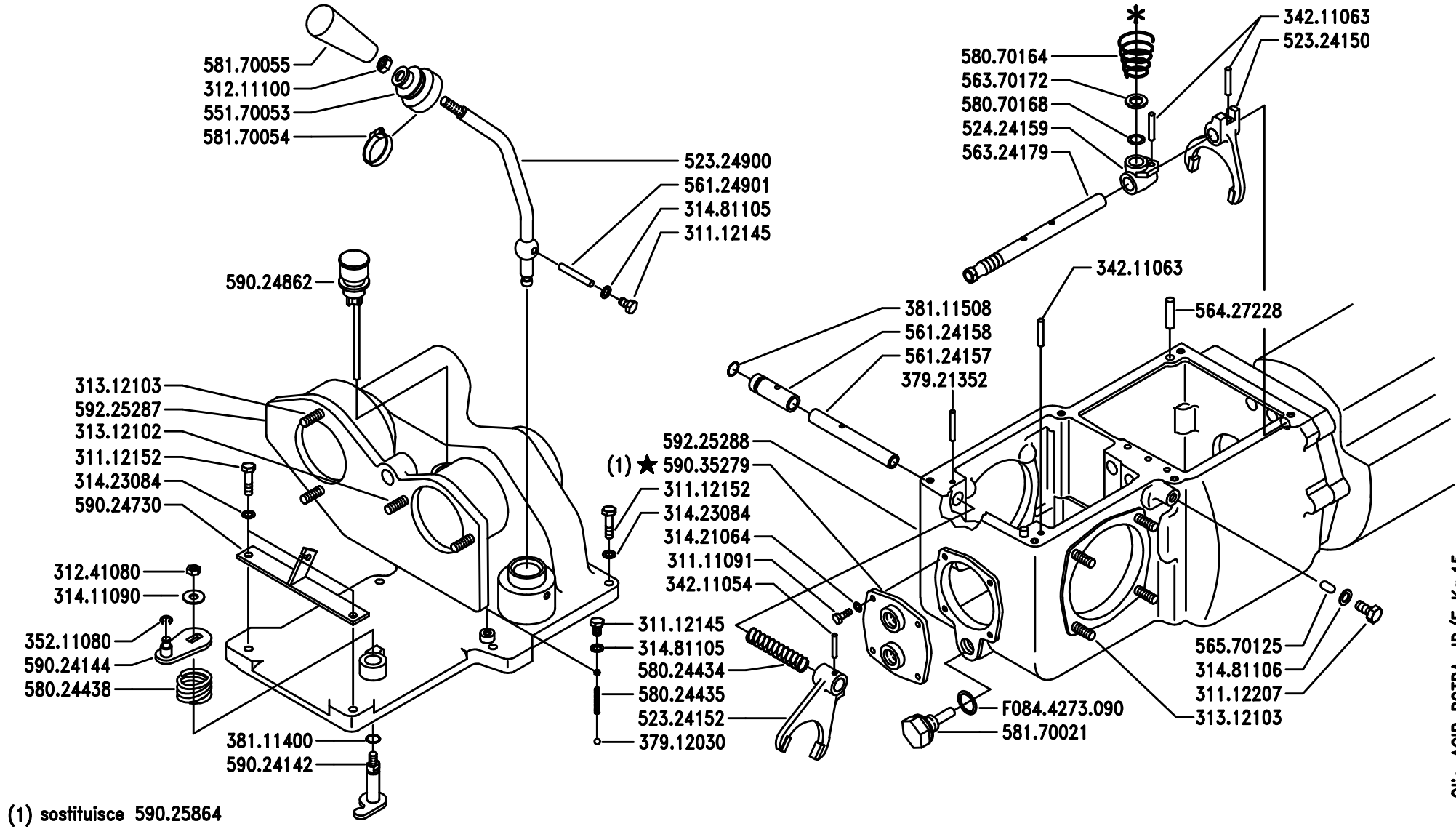

(1) sostituisce 590.25864

BCS

SERIE

MA.TRA

SCATOLA CAMBIO (MT103 – MT104 – MT205)

GEAR BOX
(MT103 – MT104 – MT205)

BOÎTE DE CHANGEMENT DE VITESSE
(MT103 – MT104 – MT205)

CAJA DE CAMBIOS
(MT103 – MT104 – MT205)

GETRIEBEGEHÄUSE
(MT103 – MT104 – MT205)

DALLA MACCHINA
DE LA MAQUINA
DE LA MACHINE
FROM THE MACHINE
AB DER MASCHINE

★ N. 1240

F02

10/199

Pos.	Code	Q.ty	Description	Notes
58024438	58024438	0	RESTORING SPRING	
58070164	58070164	0	SPRING	
58070168	58070168	0	LOCKRING	
58170021	58170021	0	PLUG	
58170054	58170054	0	COLLAR	
58170055	58170055	0	HANDLE	
59024142	59024142	0	SMALL LEVER	
59024144	59024144	0	SMALL LEVER	
59024730	59024730	0	SMALL PLATE	
59024862	59024862	0	PLUG	
59035279	59035279	0	REAR COVER	
59225287	59225287	0	GEARBOX HOUSING COVER	
59225288	59225288	0	GEAR BOX	
F0844273	F0844273090	0	GASKET 22X28X1,5 CU 99,5	

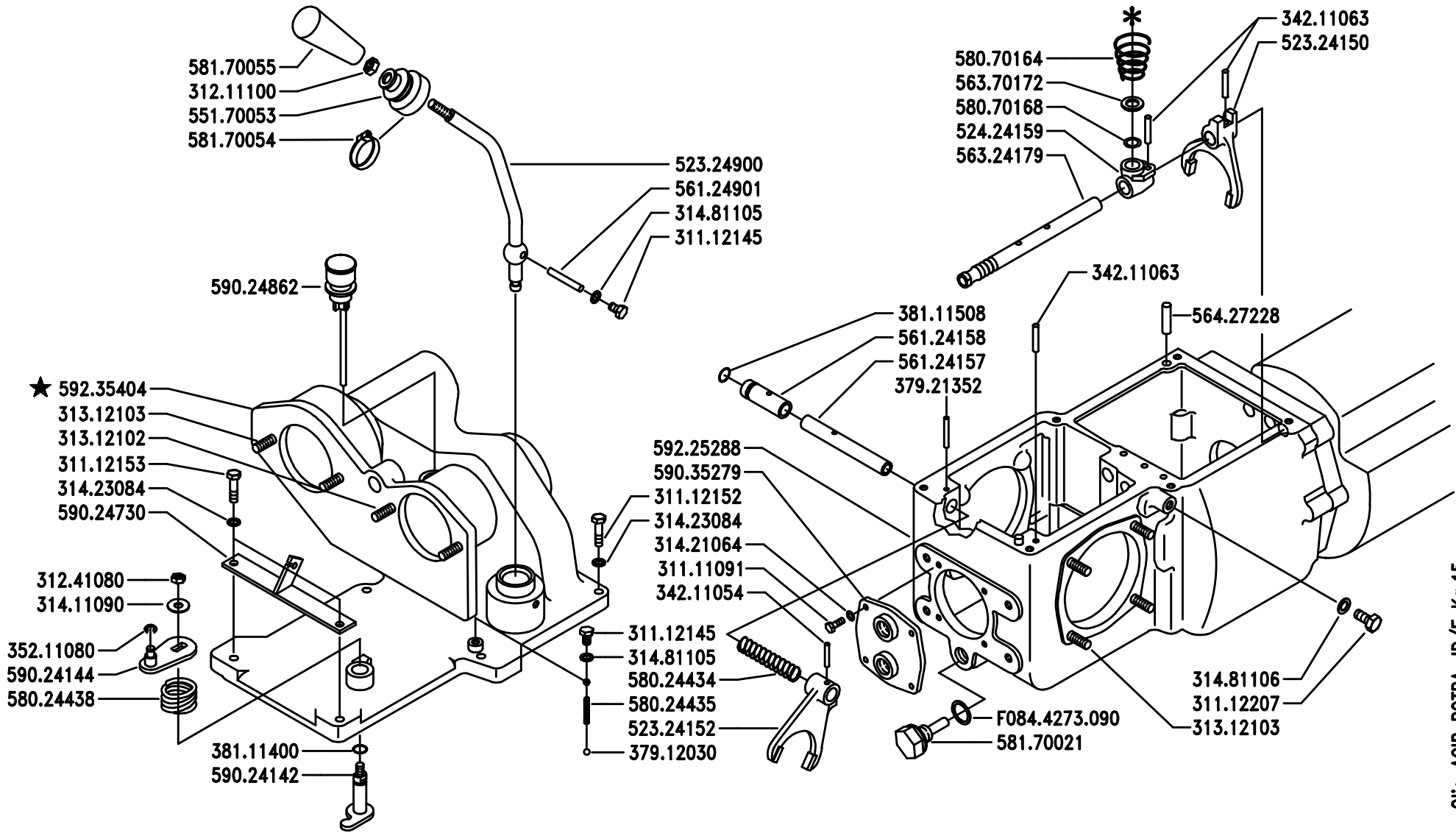

BCS

SERIE

MA.TRA

SCATOLA CAMBIO (MT103 – MT104 – MT205)

GEAR BOX
(MT103 – MT104 – MT205)

BOÎTE DE CHANGEMENT DE VITESSE
(MT103 – MT104 – MT205)

CAJA DE CAMBIOS
(MT103 – MT104 – MT205)

GETRIEBEGEHÄUSE
(MT103 – MT104 – MT205)

DALLA MACCHINA
DE LA MAQUINA
DE LA MACHINE
FROM THE MACHINE
AB DER MASCHINE

★ N. 706475

F02

03/2003

Pos.	Code	Q.ty	Description	Notes
31111091	31111091	0	SCREW E M6X14 UNI 5739 8G	
31112145	31112145	0	SCREW TE M8X10 UNI 5739 8G	
31112152	31112152	0	SCREW TE M8X30 UNI 5739 8G	
31112153	31112153	1	SCREW TE M8X35 UNI 5739 8G	
31112207	31112207	0	SCREW TE M10X14 UNI 5739	
31211100	31211100	0	NUT M10	
31241080	31241080	0	HEXAGON SELFLOCK NUT M8	
31312102	31312102	0	STUD BOLT M10X40X24X12	
31312103	31312103	0	STUD BOLT M10X46X24X16	
31411090	31411090	0	WASHER 9x24	
31421064	31421064	0	WASHER	
31423084	31423084	0	SPRING WASHER 8,4	
31481105	31481105	0	WASHER 8,4x14 UNI6592	
31481106	31481106	0	WASHER 10,5x21 U6592	
34211054	34211054	0	ROLL PIN	
34211063	34211063	0	ROLL PIN	
35211080	35211080	0	SEEGER RING E 8 UNI 7434	
37912030	37912030	0	BALL 6,5 RB	
37921352	37921352	0	ROLLER B5X39,8 G2 FAG	
38111400	38111400	0	O-RING (14,00X1,78)	
38111508	38111508	0	O-RING 119 (15,08x2,62)	
52324150	52324150	0	GEAR FORK	
52324152	52324152	0	SELECTOR FORK	
52324900	52324900	0	COMMAND LEVER	
52424159	52424159	0	CATCH	
55170053	55170053	0	CAP	
56124157	56124157	0	ROD	
56124158	56124158	0	SLEEVE	
56124901	56124901	0	LEVER PIN	
56324179	56324179	0	PULL ROD	
56370172	56370172	0	SPACER D.14x24x2,5 8.8	
56427228	56427228	0	PIN	
58024434	58024434	0	SPRING	
58024435	58024435	0	SPRING	

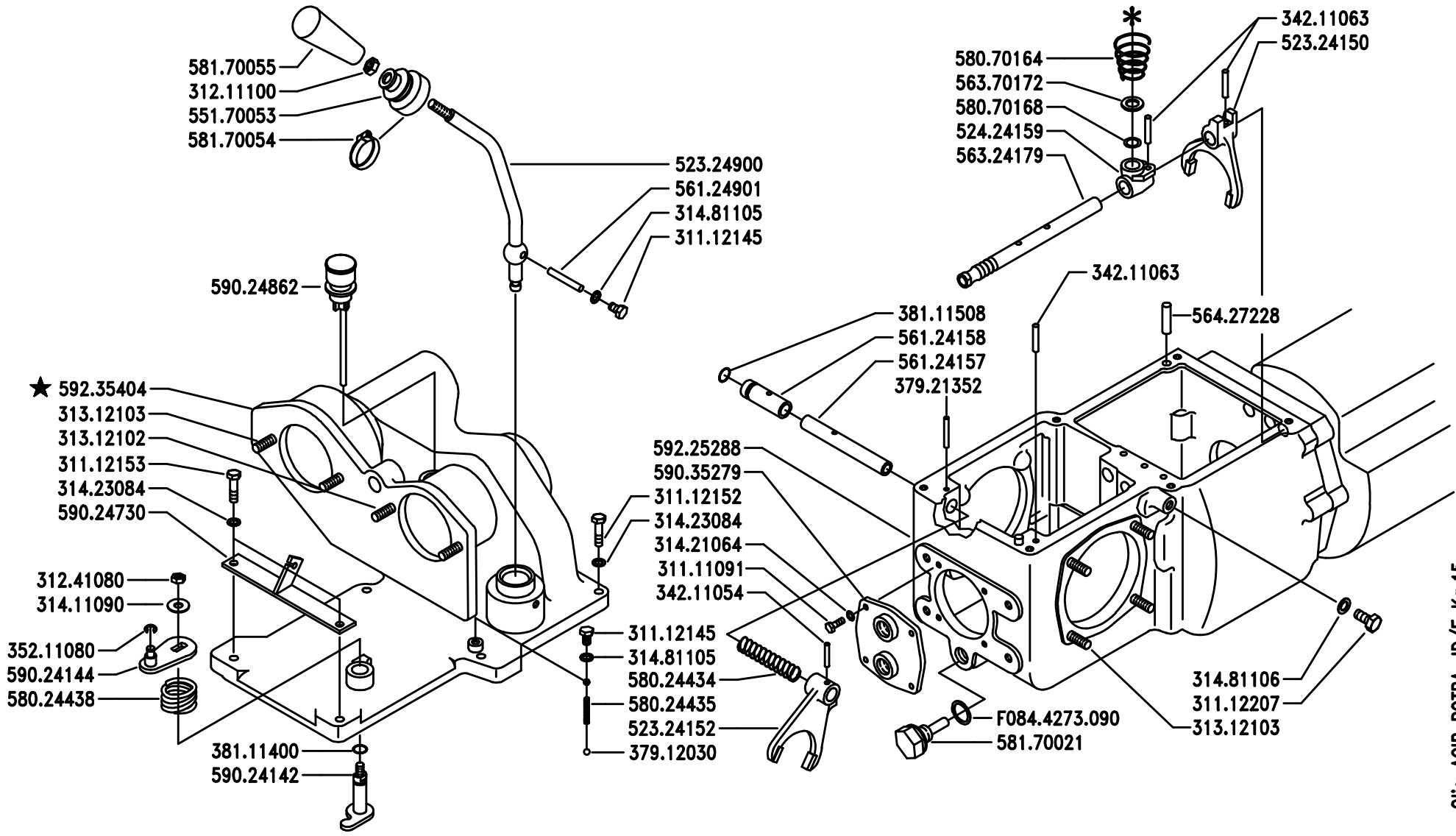

BCS

SERIE

MA.TRA

SCATOLA CAMBIO (MT103 – MT104 – MT205)

GEAR BOX
(MT103 – MT104 – MT205)

BOÎTE DE CHANGEMENT DE VITESSE
(MT103 – MT104 – MT205)

CAJA DE CAMBIOS
(MT103 – MT104 – MT205)

GETRIEBEGEHÄUSE
(MT103 – MT104 – MT205)

DALLA MACCHINA
DE LA MAQUINA
DE LA MACHINE
FROM THE MACHINE
AB DER MASCHINE

★ N. 706475

F02

03/2003

Pos.	Code	Q.ty	Description	Notes
58024438	58024438	0	RESTORING SPRING	
58070164	58070164	0	SPRING	
58070168	58070168	0	LOCKRING	
58170021	58170021	0	PLUG	
58170054	58170054	0	COLLAR	
58170055	58170055	0	HANDLE	
59024142	59024142	0	SMALL LEVER	
59024144	59024144	0	SMALL LEVER	
59024730	59024730	0	SMALL PLATE	
59024862	59024862	0	PLUG	
59035279	59035279	0	REAR COVER	
59225288	59225288	0	GEAR BOX	
59235404	59235404	1	GEARBOX HOUSING COVER	
F0844273	F0844273090	0	GASKET 22X28X1,5 CU 99,5	

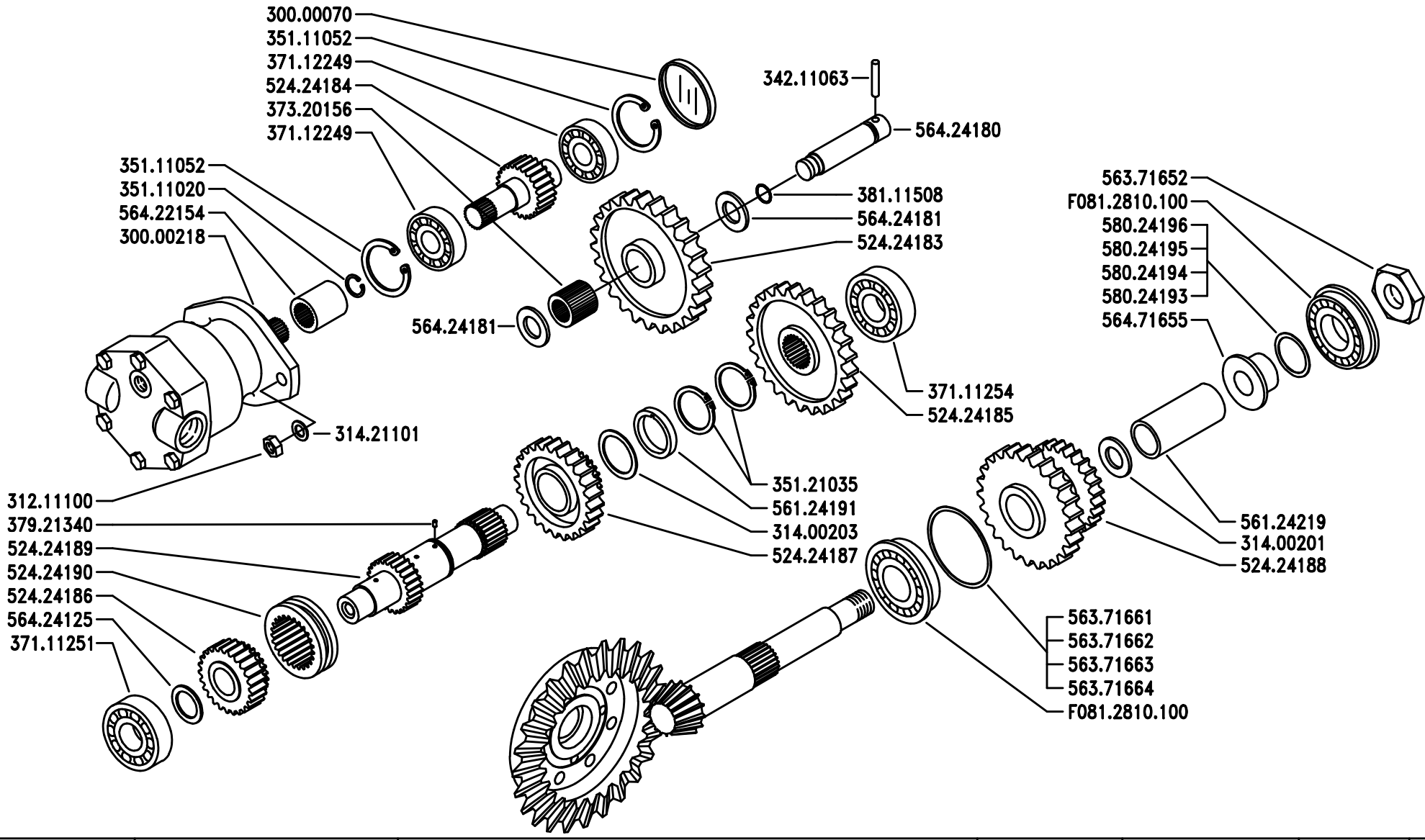

BCS

SERIE

MA.TRA

INGRANAGGI CAMBIO (MT103 – MT104)

GEAR-CHANGE (MT103 – MT104)

ENGRENAGES DE CHANGEMENT DE VITESSE (MT103 – MT104)

ENGRANAJES DEL CAMBIO (MT103 – MT104)

WECHSEIRAD (MT103 – MT104)

DALLA MACCHINA
DE LA MAQUINA
DE LA MACHINE
FROM THE MACHINE
AB DER MASCHINE

N.

Sostituisce	F04/0
Sostituye	F04/0
Remplace	F04/0
Replaces	F04/0
Ersätzt	F04/0

F04

2/199

Pos.	Code	Q.ty	Description	Notes
30000070	30000070	0	SMALL CAP CC 52X6,5	
30000218	30000218	0	ENGINE	
31211100	31211100	0	NUT M10	
31400201	31400201	0	SHIM PS 28x40/2	
31400203	31400203	0	SHIM PS 35,0x45/1	
31421101	31421101	0	WASHER	
34211063	34211063	0	ROLL PIN	
35111020	35111020	0	SEEGER RING	
35111052	35111052	0	SEEGER RING I 52 DIN 472	
35121035	35121035	0	SEEGER RING E 32 DIN 471	
37111251	37111251	0	BEARING 6305 (25X62X17)	
37111254	37111254	0	BEARING 6305 (25X62X17) SKF	
37112249	37112249	0	BEARING 6205-2RS (255215) SKF	
37320156	37320156	0	ROLLER CAGE 20X30/30	
37921340	37921340	0	ROLLER	
38111508	38111508	0	O-RING 119 (15,08x2,62)	
52424183	52424183	0	GEAR	
52424184	52424184	0	GEAR	
52424185	52424185	0	DRIVEN GEAR	
52424186	52424186	0	GEAR	
52424187	52424187	0	GEAR	
52424188	52424188	0	GEAR	
52424189	52424189	0	OUTPUT SHAFT	
52424190	52424190	0	SLIDING SLEEVE	
56124191	56124191	0	SPACER	
56124219	56124219	0	SPACER	
56371652	56371652	0	NUT	
56371661	56371661	0	ADJUSTING RING	
56371662	56371662	0	ADJUSTING RING	
56371663	56371663	0	ADJUSTING RING	
56371664	56371664	0	ADJUSTING RING	
56422154	56422154	0	SLEEVE	
56424125	56424125	0	THRUST PLATE	
56424180	56424180	0	PIN	

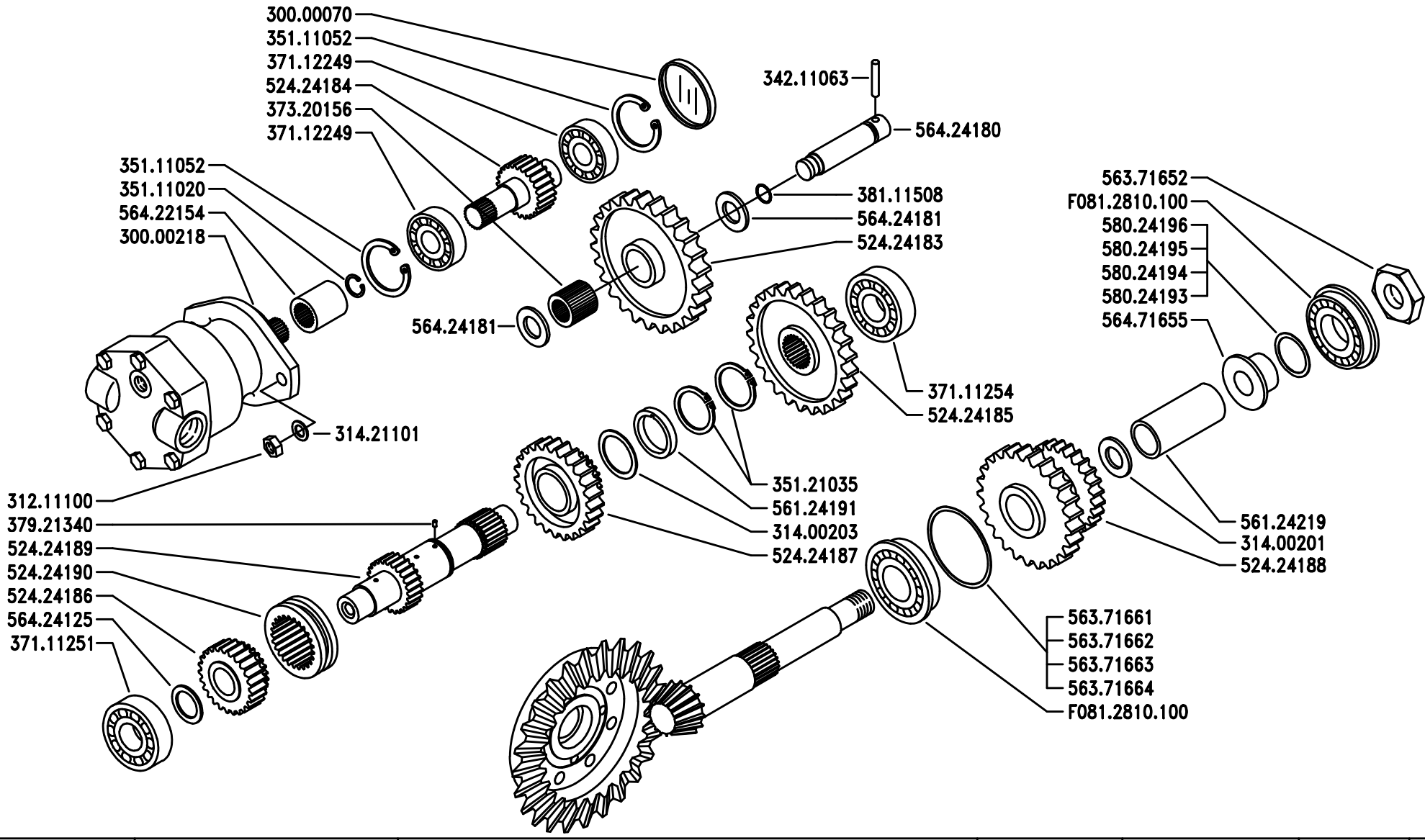

BCS

SERIE

MA.TRA

INGRANAGGI CAMBIO (MT103 – MT104)

GEAR-CHANGE (MT103 – MT104)

ENGRENAGES DE CHANGEMENT DE VITESSE (MT103 – MT104)

ENGRANAJES DEL CAMBIO (MT103 – MT104)

WECHSEIRAD (MT103 – MT104)

DALLA MACCHINA
DE LA MAQUINA
DE LA MACHINE
FROM THE MACHINE
AB DER MASCHINE

N.

Sostituisce	F04/0
Sostituye	F04/0
Remplace	F04/0
Replaces	F04/0
Ersätzt	F04/0

F04

2/1999

Pos.	Code	Q.ty	Description	Notes
56424181	56424181	0	THRUST PLATE	
56471655	56471655	0	BUSHING	
58024193	58024193	0	SHIM	
58024194	58024194	0	SHIM	
58024195	58024195	0	SHIM	
58024196	58024196	0	SHIM	
F0812810	F0812810100	0	BEARING	

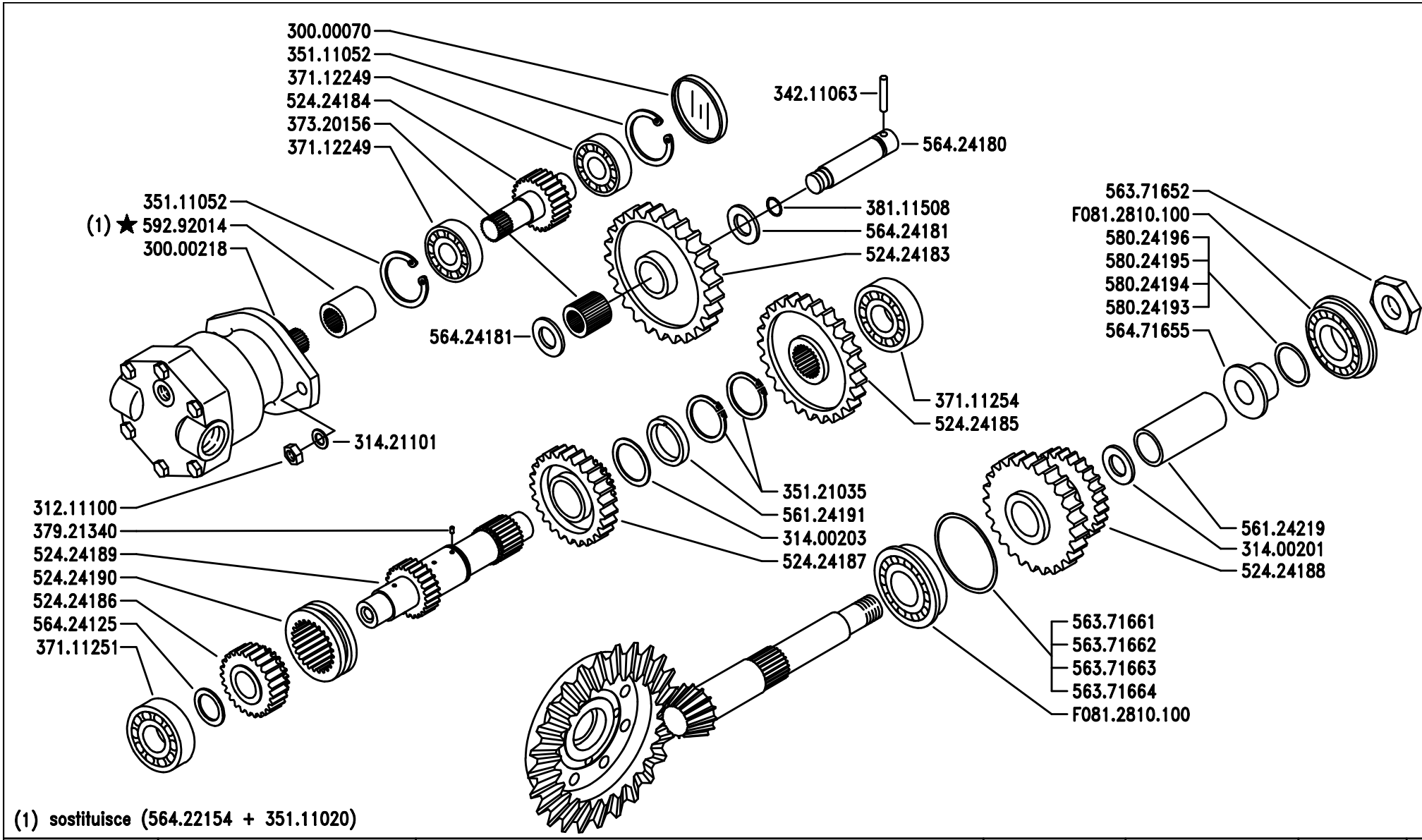

(1) sostituisce (564.22154 + 351.11020)

BCS	SERIE MA.TRA	INGRANAGGI CAMBIO (MT103 – MT104 – MT205) GEAR-CHANGE (MT103 – MT104 – MT205) ENGRANAJES DEL CAMBIO (MT103 – MT104 – MT205) ENGRENAGES DE CHANGEMENT DE VITESSE (MT103 – MT104 – MT205) WECHSELRAD (MT103 – MT104 – MT205)	DALLA MACCHINA DE LA MAQUINA DE LA MACHINE FROM THE MACHINE AB DER MASCHINE ★ N.	1616	F04 10/200

Pos.	Code	Q.ty	Description	Notes
30000070	30000070	0	SMALL CAP CC 52X6,5	
30000218	30000218	0	ENGINE	
31211100	31211100	0	NUT M10	
31400201	31400201	0	SHIM PS 28x40/2	
31400203	31400203	0	SHIM PS 35,0x45/1	
31421101	31421101	0	WASHER	
34211063	34211063	0	ROLL PIN	
35111052	35111052	0	SEEGER RING I 52 DIN 472	
35121035	35121035	0	SEEGER RING E 32 DIN 471	
37111251	37111251	0	BEARING 6305 (25X62X17)	
37111254	37111254	0	BEARING 6305 (25X62X17) SKF	
37112249	37112249	0	BEARING 6205-2RS (255215) SKF	
37320156	37320156	0	ROLLER CAGE 20X30/30	
37921340	37921340	0	ROLLER	
38111508	38111508	0	O-RING 119 (15,08x2,62)	
52424183	52424183	0	GEAR	
52424184	52424184	0	GEAR	
52424185	52424185	0	DRIVEN GEAR	
52424186	52424186	0	GEAR	
52424187	52424187	0	GEAR	
52424188	52424188	0	GEAR	
52424189	52424189	0	OUTPUT SHAFT	
52424190	52424190	0	SLIDING SLEEVE	
56124191	56124191	0	SPACER	
56124219	56124219	0	SPACER	
56371652	56371652	0	NUT	
56371661	56371661	0	ADJUSTING RING	
56371662	56371662	0	ADJUSTING RING	
56371663	56371663	0	ADJUSTING RING	
56371664	56371664	0	ADJUSTING RING	
56424125	56424125	0	THRUST PLATE	
56424180	56424180	0	PIN	
56424181	56424181	0	THRUST PLATE	
56471655	56471655	0	BUSHING	

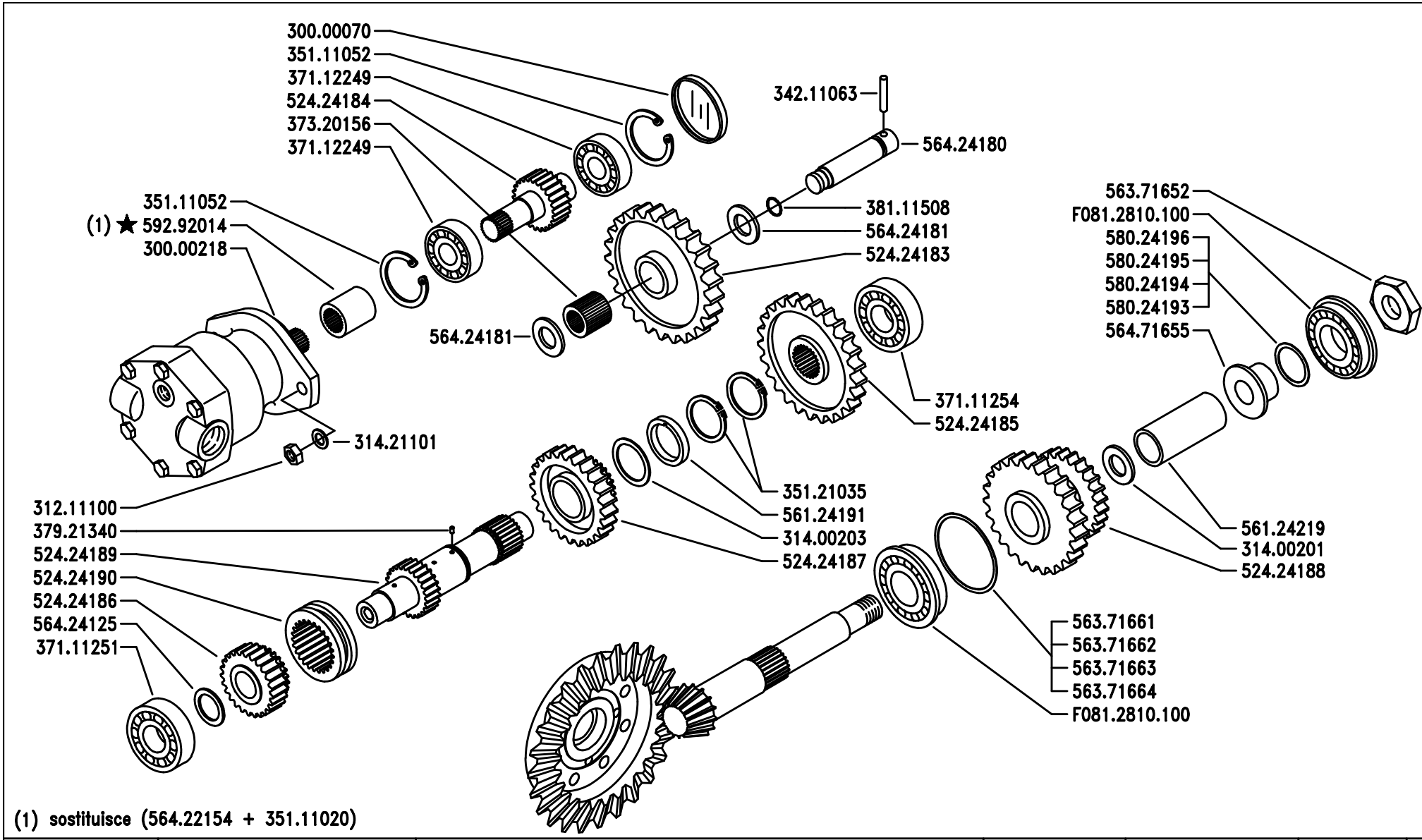

(1) sostituisce (564.22154 + 351.11020)

BCS	SERIE MA.TRA	INGRANAGGI CAMBIO (MT103 – MT104 – MT205) GEAR-CHANGE (MT103 – MT104 – MT205) ENGRANAJES DEL CAMBIO (MT103 – MT104 – MT205) ENGRENAGES DE CHANGEMENT DE VITESSE (MT103 – MT104 – MT205) WECHSELRAD (MT103 – MT104 – MT205)	DALLA MACCHINA DE LA MAQUINA DE LA MACHINE FROM THE MACHINE AB DER MASCHINE ★ N.	1616	F04 10/200

Pos.	Code	Q.ty	Description	Notes
58024193	58024193	0	SHIM	
58024194	58024194	0	SHIM	
58024195	58024195	0	SHIM	
58024196	58024196	0	SHIM	
59292014	59292014	0	SLEEVE	
F0812810	F0812810100	0	BEARING	

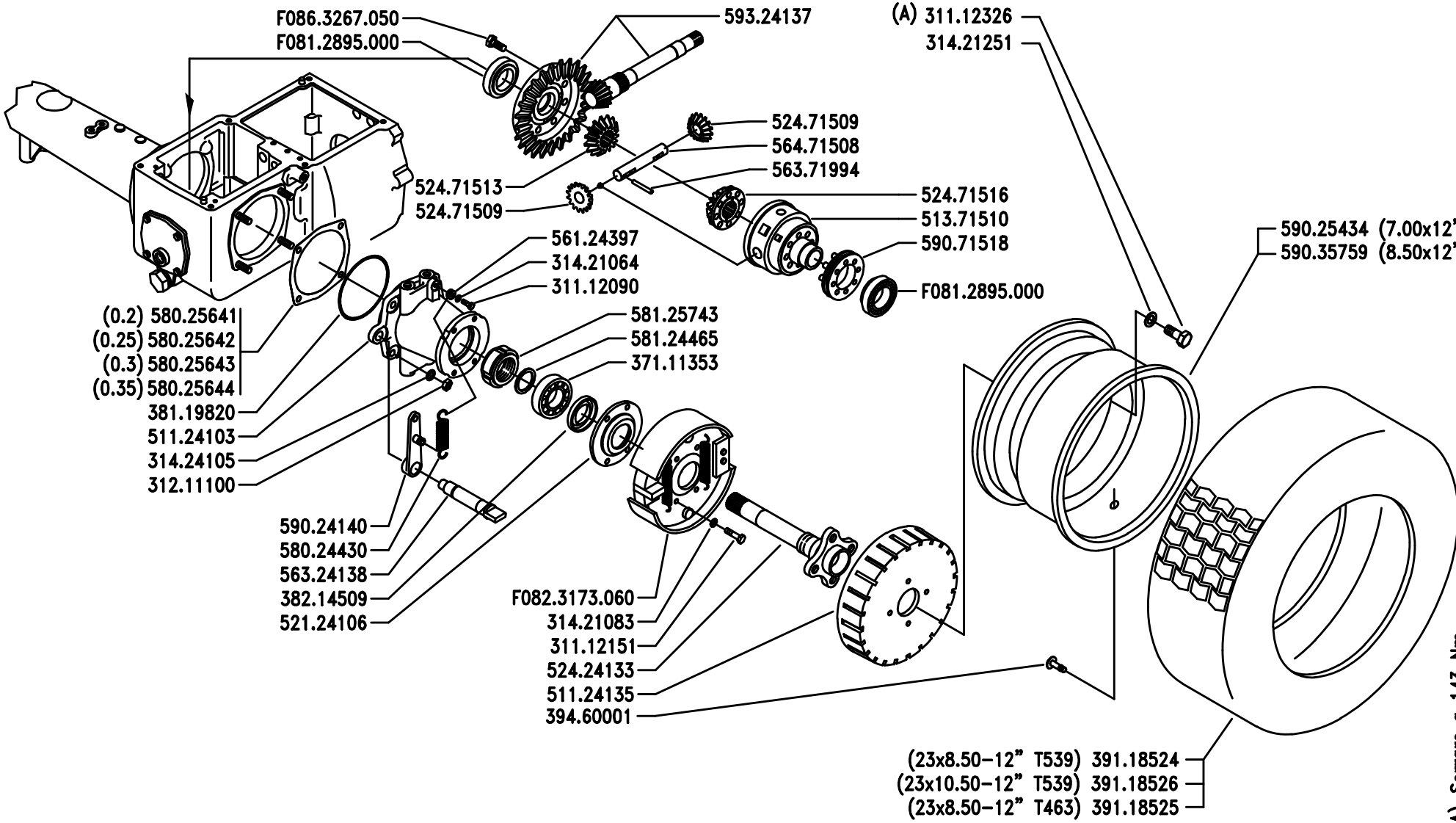

BCS

SERIE

MA.TRA

PONTE SINISTRO E DIFFERENZIALE (MT103 – MT104)

LEFT RATIO AXLE AND DIFFERENTIAL (MT103 – MT104)

PONT GAUCHE ET DIFFÉRENTIEL (MT103 – MT104)

PUENTE IZQUIERDO Y DIFERENCIAL (MT103 – MT104)

LINCHE ACHSE UND DIFFERENTIAL (MT103 – MT104)

DALLA MACCHINA
DE LA MAQUINA
DE LA MACHINE
FROM THE MACHINE
AB DER MASCHINE

N.

Sostituisce	G02/0
Sostituye	G02/0
Remplace	G02/0
Replaces	G02/0
Ersätzt	G02/0

G02

2/1999

Pos.	Code	Q.ty	Description	Notes
31112090	31112090	0	SCREW TE M6X16 UNI 5739 8G	
31112151	31112151	0	SCREW TE M8X25 UNI 5739 8G	
31112326	31112326	0	SCREW TE M14X1,5X30 UNI 5740	
31211100	31211100	0	NUT M10	
31421064	31421064	0	WASHER	
31421083	31421083	0	WASHER	
31421251	31421251	0	WASHER	
31424105	31424105	0	SPRING WASHER 10,5	
37111353	37111353	0	BEARING 6207 (35X72X17) SKF	
38119820	38119820	0	O-RING 4437 (110,72X3,53)	
38214509	38214509	0	OIL SEAL 45X62X8	
39118524	39118524	0	TYRE 23X8.50-12 4PR	
39118525	39118525	0	TYRE 23X8.50-12 4PR	
39118526	39118526	0	TYRE 23X10.50-12 4PR	
39460001	39460001	0	VALVE	
51124103	51124103	0	REDUCTION BOX	
51124135	51124135	0	BRAKE DRUM DIAM.200	
51371510	51371510	0	HOUSING	
52124106	52124106	0	FLANGE	
52424133	52424133	0	AXLE SHAFT	
52471509	52471509	0	PLANETARY GEAR	
52471513	52471513	0	CROWN WHEEL	
52471516	52471516	0	CROWN WHEEL	
56124397	56124397	0	EYELET	
56324138	56324138	0	BLOCK OPENING PIN	
56371994	56371994	0	PIN	
56471508	56471508	0	PIN	
58024430	58024430	0	SPRING	
58025641	58025641	0	SHIM	
58025642	58025642	0	SHIM	
58025643	58025643	0	SHIM	
58025644	58025644	0	SHIM	
58124465	58124465	0	SHIM	
58125743	58125743	0	RING NUT	

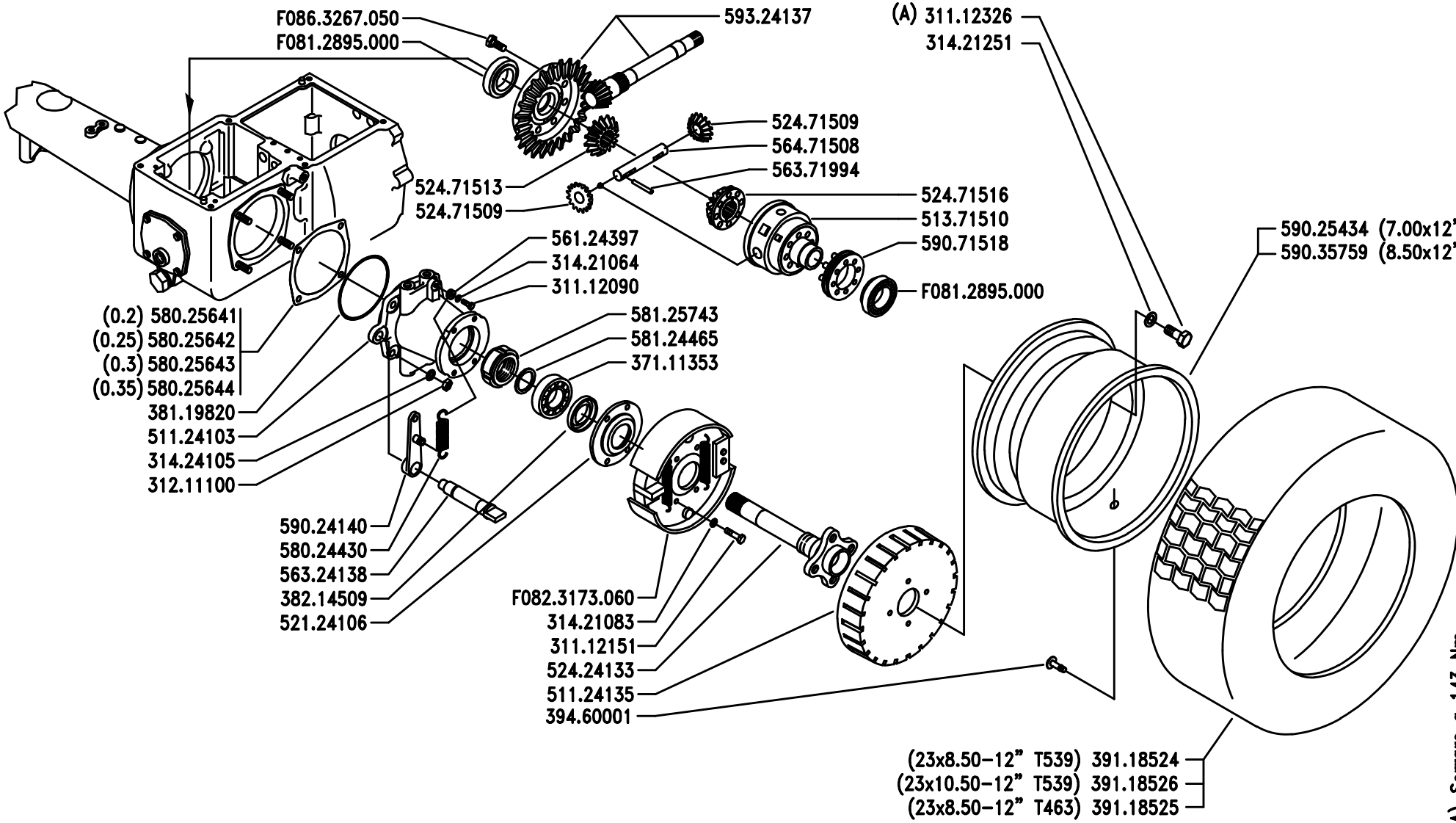

BCS

SERIE

MA.TRA

PONTE SINISTRO E DIFFERENZIALE (MT103 – MT104)

LEFT RATIO AXLE AND DIFFERENTIAL (MT103 – MT104)

PONT GAUCHE ET DIFFÉRENTIEL (MT103 – MT104)

PUENTE IZQUIERDO Y DIFERENCIAL (MT103 – MT104)

LINCHE ACHSE UND DIFFERENTIAL (MT103 – MT104)

DALLA MACCHINA
DE LA MAQUINA
DE LA MACHINE
FROM THE MACHINE
AB DER MASCHINE
N.

Sostituisce	G02/0
Sostituye	G02/0
Remplace	G02/0
Replaces	G02/0
Ersätzt	G02/0

G02

2/1999

Pos.	Code	Q.ty	Description	Notes
59024140	59024140	0	LEVER	
59025434	59025434	0	RIM	
59035759	59035759	0	RIM	
59071518	59071518	0	SLEEVE	
59324137	59324137	0	BEVEL GEAR	
F0812895	F0812895000	0	BEARING 32008 (40X68X19)	
F0823173	F0823173060	0	BRAKE ELEMENT	
F0863267	F0863267050	0	SCREW M10x25	

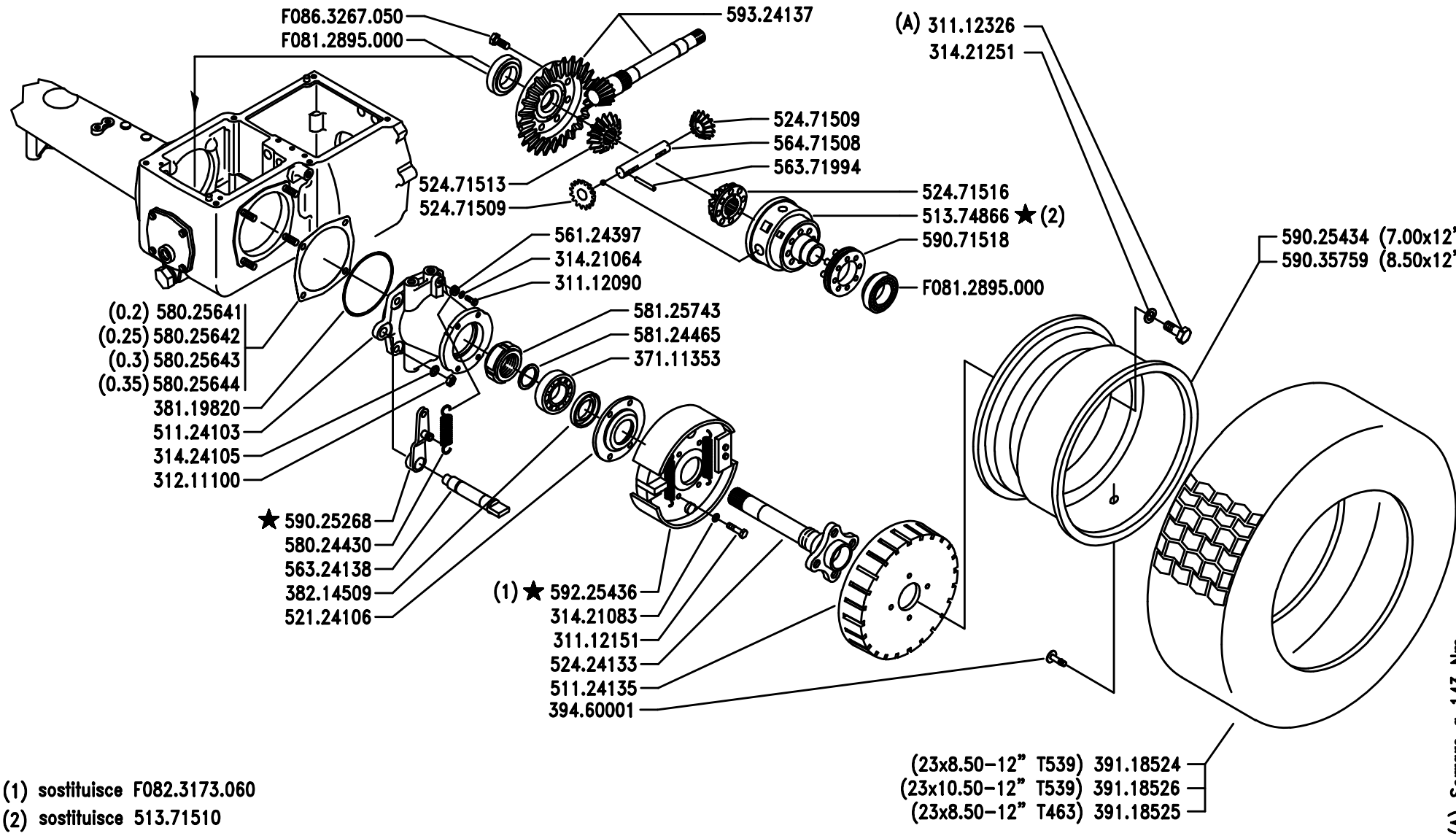

(1) sostituisce F082.3173.060
(2) sostituisce 513.71510

BCS	SERIE MA.TRA	PONTE SINISTRO E DIFFERENZIALE (MT103/MT104/MT205) LEFT RATIO AXLE AND DIFFERENTIAL (MT103 – MT104 – MT205) PONT GAUCHE ET DIFFÉRENTIEL (MT103 – MT104 – MT205) PUENTE IZQUIERDO Y DIFERENCIAL (MT103 – MT104 – MT205) LINCHE ACHSE UND DIFFERENTIAL (MT103 – MT104 – MT205)	DALLA MACCHINA DE LA MAQUINA DE LA MACHINE FROM THE MACHINE AB DER MASCHINE ★ N.	1050	G02 3/1999

Pos.	Code	Q.ty	Description	Notes
31112090	31112090	0	SCREW TE M6X16 UNI 5739 8G	
31112151	31112151	0	SCREW TE M8X25 UNI 5739 8G	
31112326	31112326	0	SCREW TE M14X1,5X30 UNI 5740	
31211100	31211100	0	NUT M10	
31421064	31421064	0	WASHER	
31421083	31421083	0	WASHER	
31421251	31421251	0	WASHER	
31424105	31424105	0	SPRING WASHER 10,5	
37111353	37111353	0	BEARING 6207 (35X72X17) SKF	
38119820	38119820	0	O-RING 4437 (110,72X3,53)	
38214509	38214509	0	OIL SEAL 45X62X8	
39118524	39118524	0	TYRE 23X8.50-12 4PR	
39118525	39118525	0	TYRE 23X8.50-12 4PR	
39118526	39118526	0	TYRE 23X10.50-12 4PR	
39460001	39460001	0	VALVE	
51124103	51124103	0	REDUCTION BOX	
51124135	51124135	0	BRAKE DRUM DIAM.200	
51374866	51374866	0	HOUSING	
52124106	52124106	0	FLANGE	
52424133	52424133	0	AXLE SHAFT	
52471509	52471509	0	PLANETARY GEAR	
52471513	52471513	0	CROWN WHEEL	
52471516	52471516	0	CROWN WHEEL	
56124397	56124397	0	EYELET	
56324138	56324138	0	BLOCK OPENING PIN	
56371994	56371994	0	PIN	
56471508	56471508	0	PIN	
58024430	58024430	0	SPRING	
58025641	58025641	0	SHIM	
58025642	58025642	0	SHIM	
58025643	58025643	0	SHIM	
58025644	58025644	0	SHIM	
58124465	58124465	0	SHIM	
58125743	58125743	0	RING NUT	

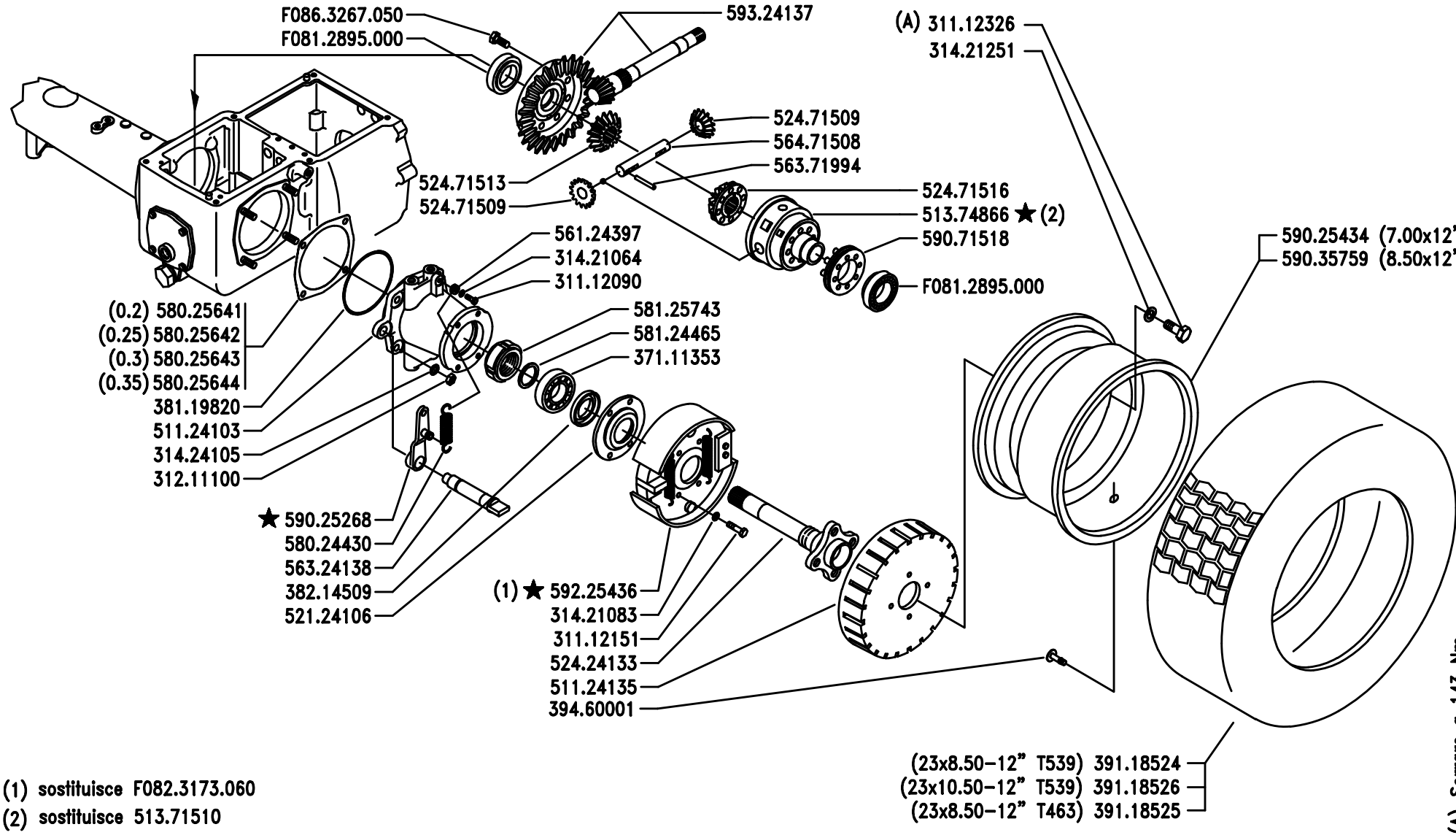

(1) sostituisce F082.3173.060
(2) sostituisce 513.71510

BCS	SERIE MA.TRA	PONTE SINISTRO E DIFFERENZIALE (MT103/MT104/MT205) LEFT RATIO AXLE AND DIFFERENTIAL (MT103 – MT104 – MT205) / PONT GAUCHE ET DIFFÉRENTIEL (MT103 – MT104 – MT205) PUENTE IZQUIERDO Y DIFERENCIAL (MT103 – MT104 – MT205) / LINCHE ACHSE UND DIFFERENTIAL (MT103 – MT104 – MT205)	DALLA MACCHINA / DE LA MAQUINA / DE LA MACHINE / FROM THE MACHINE / AB DER MASCHINE ★ N. 1050	G02	3/1999

Pos.	Code	Q.ty	Description	Notes
59025268	59025268	0	LEVER	
59025434	59025434	0	RIM	
59035759	59035759	0	RIM	
59071518	59071518	0	SLEEVE	
59225436	59225436	0	BRAKE ELEMENT	
59324136	59324136	0	BEVEL GEAR	
F0812895	F0812895000	0	BEARING 32008 (40X68X19)	
F0863267	F0863267050	0	SCREW M10x25	

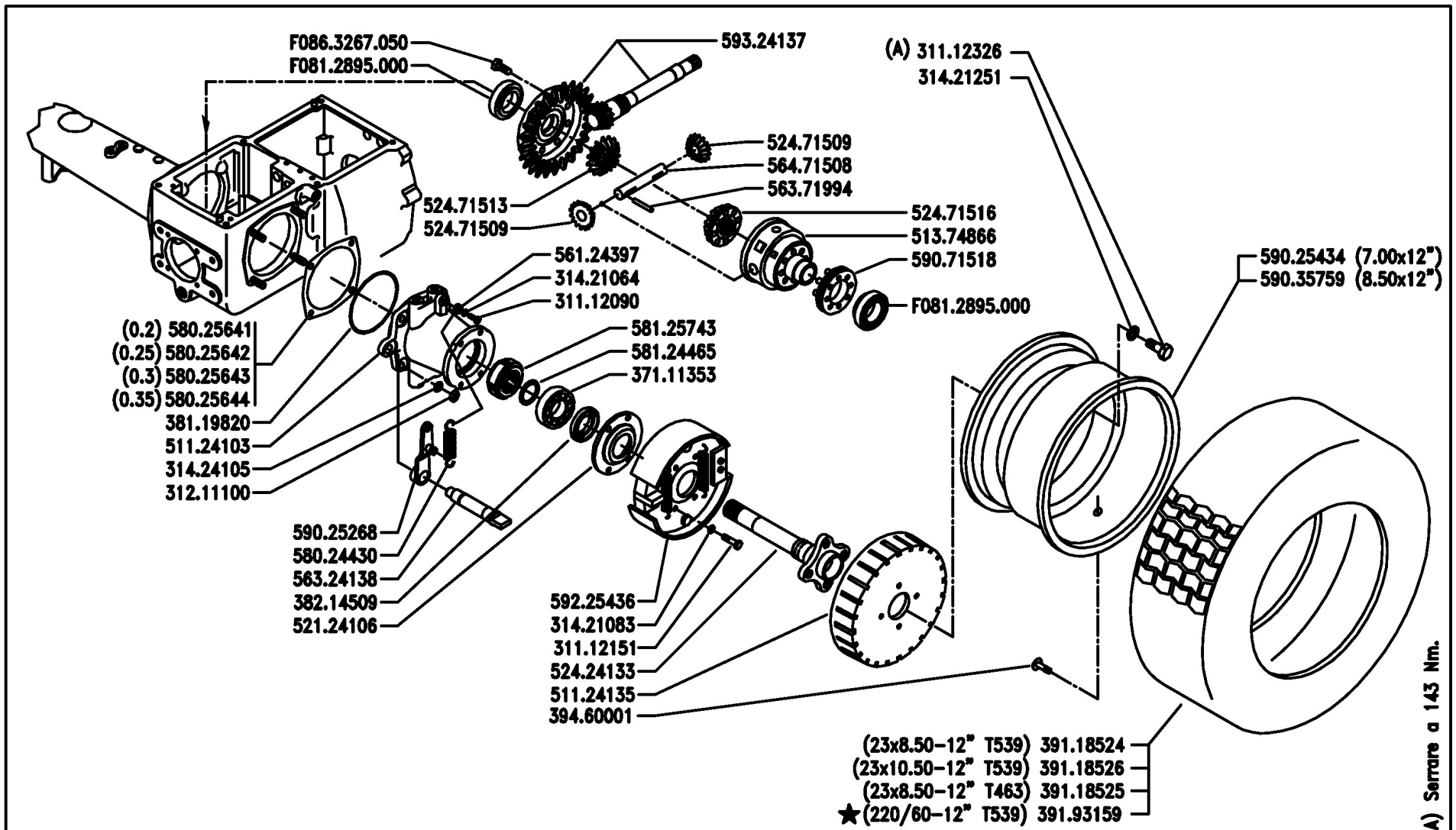

BCS	SERIE MA.TRA	PONTE SINISTRO E DIFFERENZIALE (MT103/MT104/MT205) LEFT RATIO AXLE AND DIFFERENTIAL (MT103 - MT104 - MT205) PONT GAUCHE ET DIFFÉRENTIEL (MT103 - MT104 - MT205) PUENTE IZQUIERDO Y DIFERENCIAL (MT103 - MT104 - MT205) LINCHE ACHSE UND DIFFERENTIAL (MT103 - MT104 - MT205)	DALLA MACCHINA DE LA MAQUINA DE LA MACHINE FROM THE MACHINE AB DER MASCHINE ★N.	AGGIORNAMENTO APLAZAMIENTO MISE A JOUR REVISION ANPASSUNG	G02 06/2005	Rev. 3

DIFF - BCS 32G02T03B

Pos.	Code	Q.ty	Description	Notes
31112090	31112090	1	SCREW TE M6X16 UNI 5739 8G	
31112151	31112151	1	SCREW TE M8X25 UNI 5739 8G	
31112326	31112326	1	SCREW TE M14X1,5X30 UNI 5740	
31211100	31211100	1	NUT M10	
31421064	31421064	1	WASHER	
31421083	31421083	1	WASHER	
31421251	31421251	1	WASHER	
31424105	31424105	1	SPRING WASHER 10,5	
37111353	37111353	1	BEARING 6207 (35X72X17) SKF	
38119820	38119820	1	O-RING 4437 (110,72X3,53)	
38214509	38214509	1	OIL SEAL 45X62X8	
39118524	39118524	1	TYRE 23X8.50-12 4PR	
39118525	39118525	1	TYRE 23X8.50-12 4PR	
39118526	39118526	1	TYRE 23X10.50-12 4PR	
39193159	39193159	1	TYRE 220/60-12TL	
39460001	39460001	1	VALVE	
51124103	51124103	1	REDUCTION BOX	
51124135	51124135	1	BRAKE DRUM DIAM.200	
51374866	51374866	1	HOUSING	
52124106	52124106	1	FLANGE	
52424133	52424133	1	AXLE SHAFT	
52471509	52471509	1	PLANETARY GEAR	
52471513	52471513	1	CROWN WHEEL	
52471516	52471516	1	CROWN WHEEL	
56124397	56124397	1	EYELET	
56324138	56324138	1	BLOCK OPENING PIN	
56371994	56371994	1	PIN	
56471508	56471508	1	PIN	
58024430	58024430	1	SPRING	
58025641	58025641	1	SHIM	
58025642	58025642	1	SHIM	
58025643	58025643	1	SHIM	
58025644	58025644	1	SHIM	
58124465	58124465	1	SHIM	

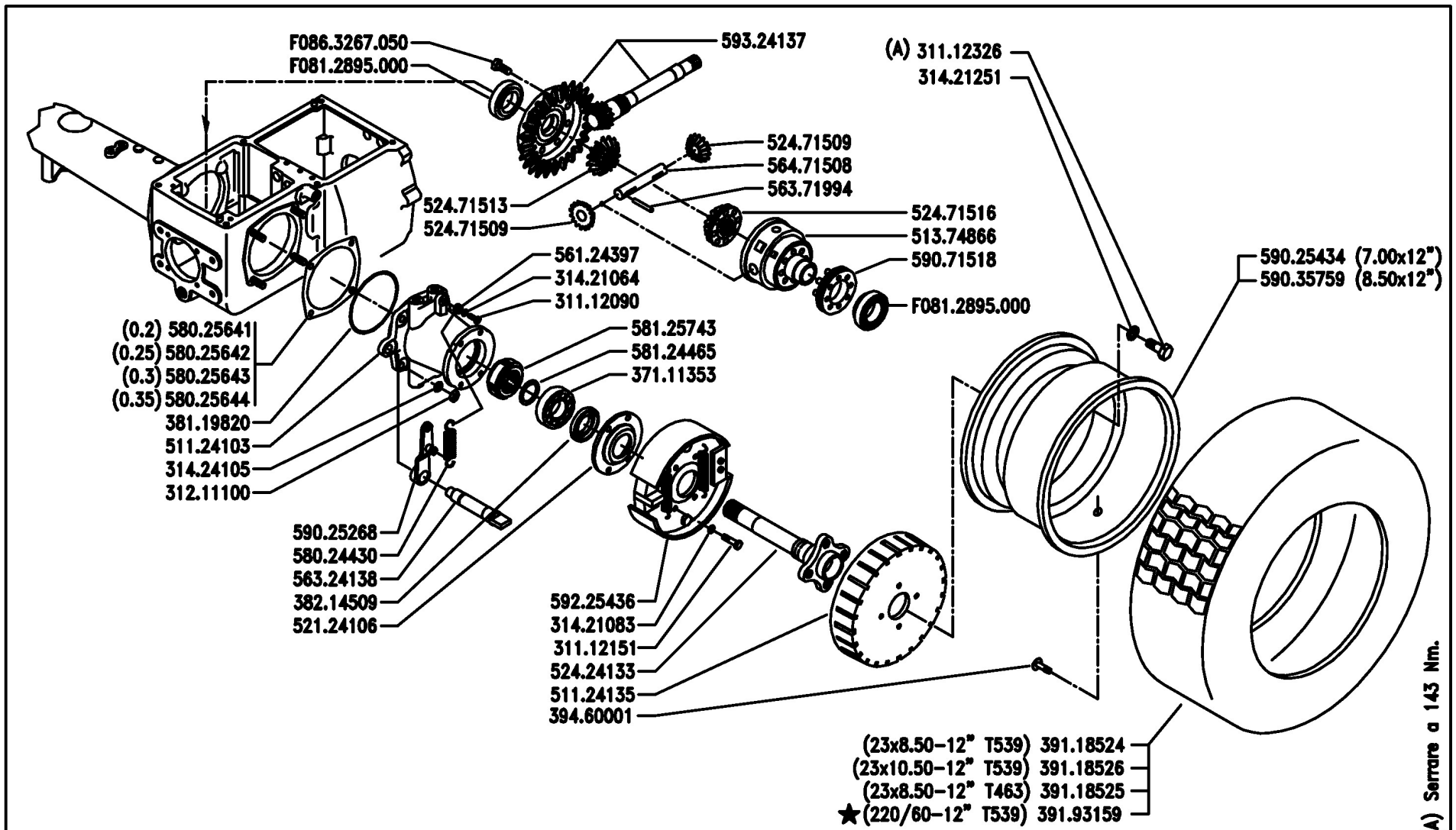

BCS	SERIE MA.TRA	PONTE SINISTRO E DIFFERENZIALE (MT103/MT104/MT205) LEFT RATIO AXLE AND DIFFERENTIAL (MT103 - MT104 - MT205) PONT GAUCHE ET DIFFÉRENTIEL (MT103 - MT104 - MT205) PUENTE IZQUIERDO Y DIFERENCIAL (MT103 - MT104 - MT205) LINCHE ACHSE UND DIFFERENTIAL (MT103 - MT104 - MT205)	DALLA MACCHINA DE LA MAQUINA DE LA MACHINE FROM THE MACHINE AB DER MASCHINE ★N.	AGGIORNAMENTO APLAZAMIENTO MISE A JOUR REVISION ANPASSUNG	G02 06/2005	Rev. 3

DIFF - BCS 32G02T03B

Pos.	Code	Q.ty	Description	Notes
58125743	58125743	1	RING NUT	
59025268	59025268	1	LEVER	
59025434	59025434	1	RIM	
59035759	59035759	1	RIM	
59071518	59071518	1	SLEEVE	
59225436	59225436	1	BRAKE ELEMENT	
59324136	59324136	1	BEVEL GEAR	
F0812895	F0812895000	1	BEARING 32008 (40X68X19)	
F0863267	F0863267050	1	SCREW M10x25	

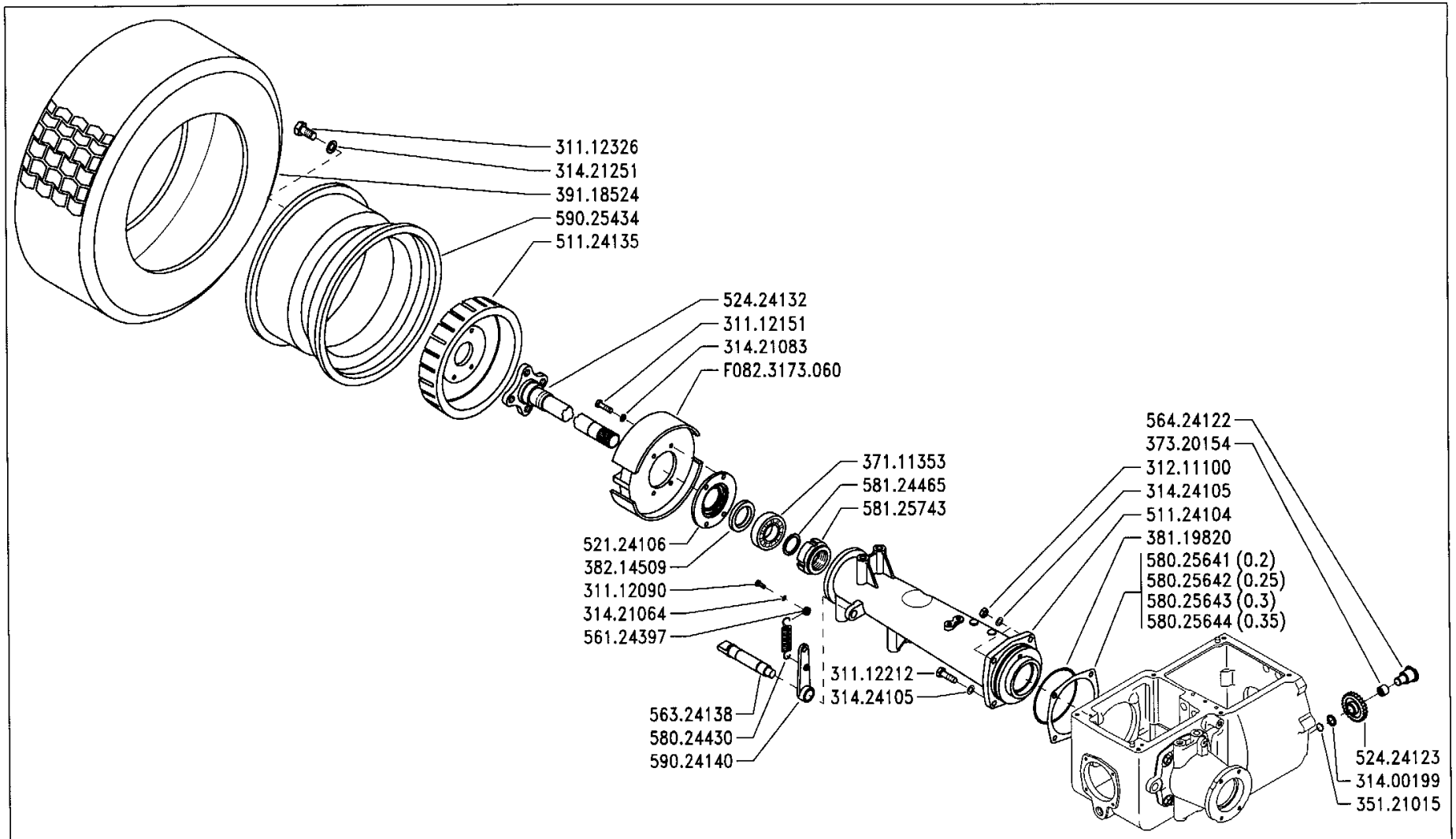

BCS

SERIE

MA.TRA

PONTE DESTRO

RIGHT RATIO AXLE

PUENTE DERECHO

PONT DROIT

RECHTE ACHSE

DALLA MACCHINA
DE LA MAQUINA
DE LA MACHINE
FROM THE MACHINE
AB DER MASCHINE

N.

PRODUZIONE 1998
PRODUCCIÓN 1998
PRODUCTION 1998
PRODUCTION 1998
PRODUKTION 1998

G03

Mod. 0

1/1999

ZENNE

Pos.	Code	Q.ty	Description	Notes
31112090	31112090	0	SCREW TE M6X16 UNI 5739 8G	
31112151	31112151	0	SCREW TE M8X25 UNI 5739 8G	
31112212	31112212	0	SCREW TE M10X35 UNI 5739	
31112326	31112326	0	SCREW TE M14X1,5X30 UNI 5740	
31211100	31211100	0	NUT M10	
31400199	31400199	0	SHIM PS 15,0x22/1,5	
31421064	31421064	0	WASHER	
31421083	31421083	0	WASHER	
31421251	31421251	0	WASHER	
31424105	31424105	0	SPRING WASHER 10,5	
35121015	35121015	0	SEEGER RING E 15 DIN 471	
37111353	37111353	0	BEARING 6207 (35X72X17) SKF	
37320154	37320154	0	GABBIA R/NI K 15X18/14 FAG	
38119820	38119820	0	O-RING 4437 (110,72X3,53)	
38214509	38214509	0	OIL SEAL 45X62X8	
39118524	39118524	0	TYRE 23X8.50-12 4PR	
51124104	51124104	0	REDUCTION BOX	
51124135	51124135	0	BRAKE DRUM DIAM.200	
52124106	52124106	0	FLANGE	
52424123	52424123	0	INGRANAGGIO OZIOSO RM ¤	
52424132	52424132	0	AXLE SHAFT	
56124397	56124397	0	EYELET	
56324138	56324138	0	BLOCK OPENING PIN	
56424122	56424122	0	PIN	
58024430	58024430	0	SPRING	
58025641	58025641	0	SHIM	
58025642	58025642	0	SHIM	
58025643	58025643	0	SHIM	
58025644	58025644	0	SHIM	
58124465	58124465	0	SHIM	
58125743	58125743	0	RING NUT	
59024140	59024140	0	LEVER	
59025434	59025434	0	RIM	
F0823173	F0823173060	0	BRAKE ELEMENT	

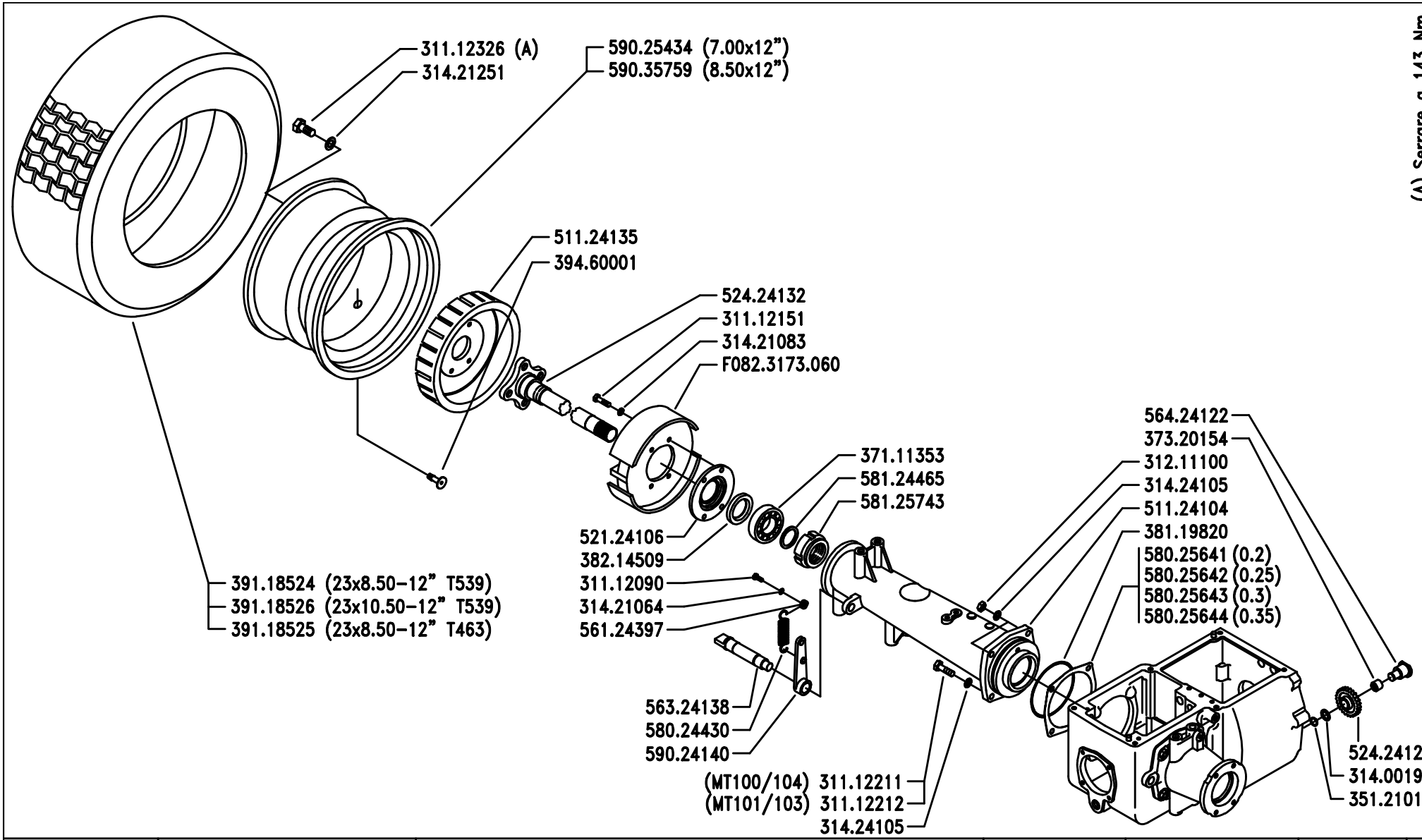

BCS	SERIE MA.TRA	PONTE DESTRO RIGHT RATIO AXLE / PONT DROIT PUENTE DERECHO / RECHTE ACHSE	DALLA MACCHINA DE LA MAQUINA DE LA MACHINE FROM THE MACHINE AB DER MASCHINE N.	Sostituisce G03/0 Sostituye G03/0 Remplace G03/0 Replaces G03/0 Ersätzt G03/0	G03 2/199

Pos.	Code	Q.ty	Description	Notes
31112090	31112090	0	SCREW TE M6X16 UNI 5739 8G	
31112151	31112151	0	SCREW TE M8X25 UNI 5739 8G	
31112211	31112211	0	SCREW TE M10X30 UNI 5739	
31112212	31112212	0	SCREW TE M10X35 UNI 5739	
31112326	31112326	0	SCREW TE M14X1,5X30 UNI 5740	
31211100	31211100	0	NUT M10	
31400199	31400199	0	SHIM PS 15,0x22/1,5	
31421064	31421064	0	WASHER	
31421083	31421083	0	WASHER	
31421251	31421251	0	WASHER	
31424105	31424105	0	SPRING WASHER 10,5	
35121015	35121015	0	SEEGER RING E 15 DIN 471	
37111353	37111353	0	BEARING 6207 (35X72X17) SKF	
37320154	37320154	0	GABBIA R/NI K 15X18/14 FAG	
38119820	38119820	0	O-RING 4437 (110,72X3,53)	
38214509	38214509	0	OIL SEAL 45X62X8	
39118524	39118524	0	TYRE 23X8.50-12 4PR	
39118525	39118525	0	TYRE 23X8.50-12 4PR	
39118526	39118526	0	TYRE 23X10.50-12 4PR	
39460001	39460001	0	VALVE	
51124104	51124104	0	REDUCTION BOX	
51124135	51124135	0	BRAKE DRUM DIAM.200	
52124106	52124106	0	FLANGE	
52424123	52424123	0	INGRANAGGIO OZIOSO RM ¤	
52424132	52424132	0	AXLE SHAFT	
56124397	56124397	0	EYELET	
56324138	56324138	0	BLOCK OPENING PIN	
56424122	56424122	0	PIN	
58024430	58024430	0	SPRING	
58025641	58025641	0	SHIM	
58025642	58025642	0	SHIM	
58025643	58025643	0	SHIM	
58025644	58025644	0	SHIM	
58124465	58124465	0	SHIM	

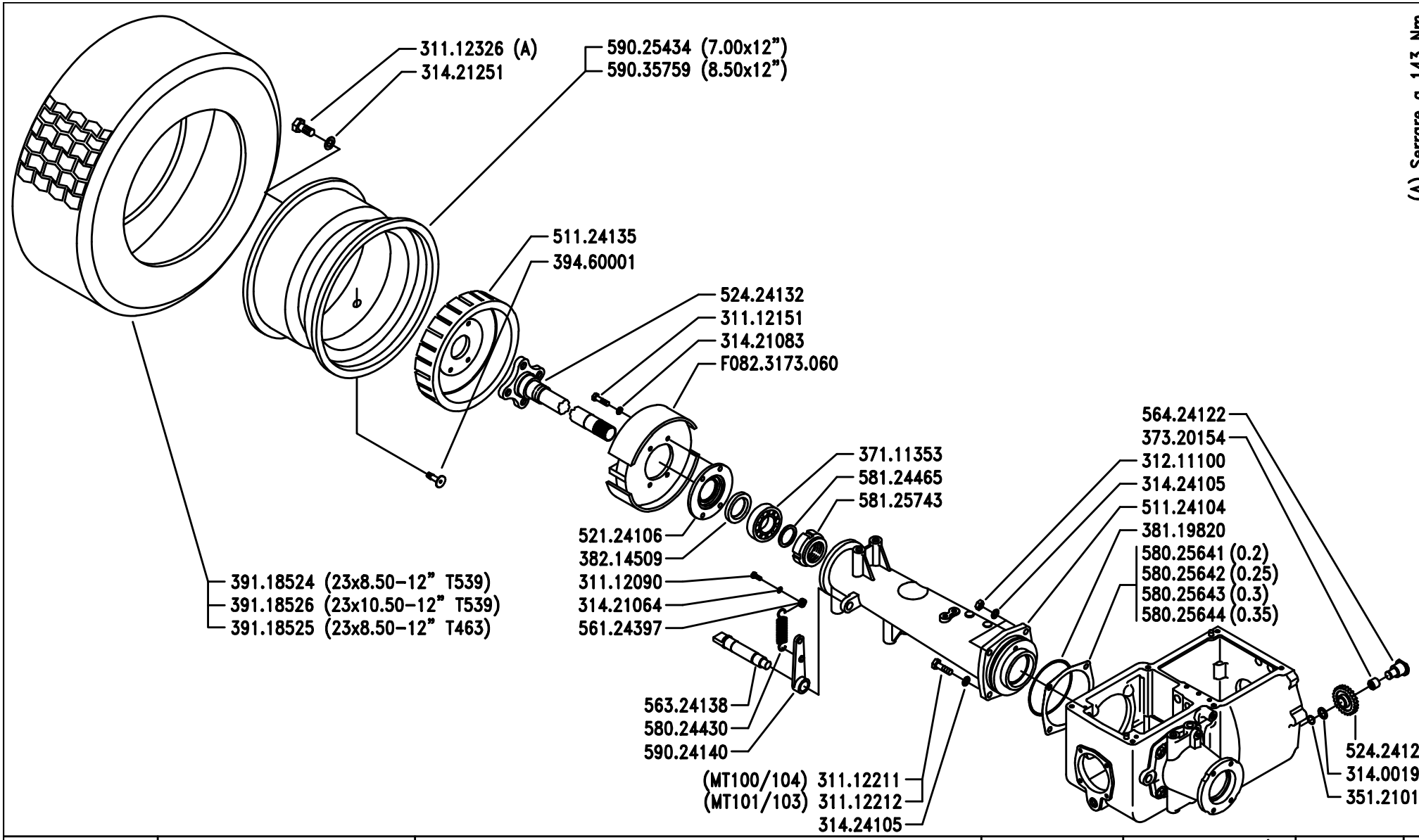

(A) Serrare a 143 Nm

BCS

SERIE

MA.TRA

PONTE DESTRO

RIGHT RATIO AXLE

PUENTE DERECHO

PONT DROIT

RECHTE ACHSE

DALLA MACCHINA
DE LA MAQUINA
DE LA MACHINE
FROM THE MACHINE
AB DER MASCHINE

N.

Sostituisce	G03/0
Sostituye	G03/0
Remplace	G03/0
Replaces	G03/0
Ersätzt	G03/0

G03

2/199

Pos.	Code	Q.ty	Description	Notes
58125743	58125743	0	RING NUT	
59024140	59024140	0	LEVER	
59025434	59025434	0	RIM	
59035759	59035759	0	RIM	
F0823173	F0823173060	0	BRAKE ELEMENT	

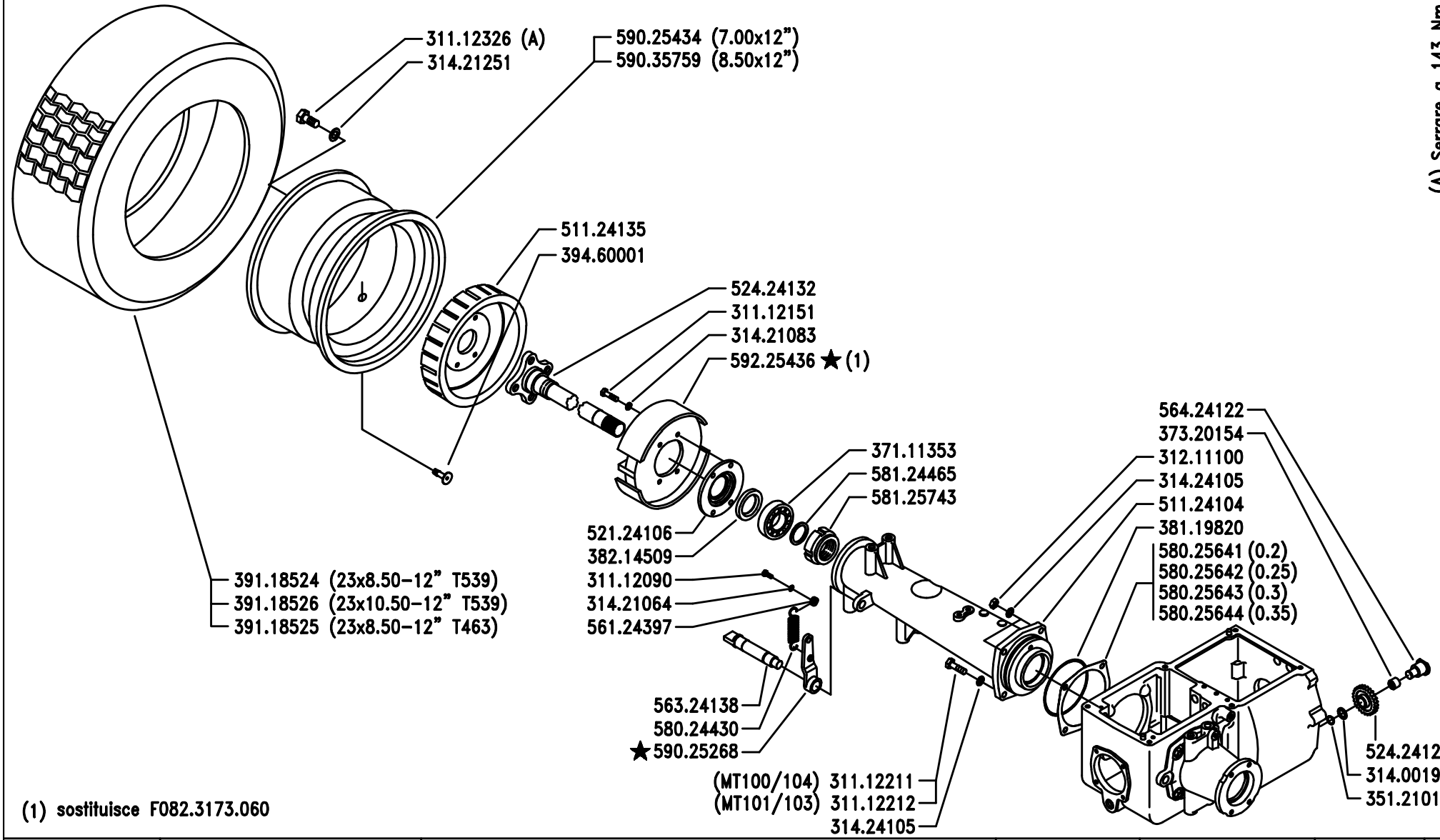

(1) sostituisce F082.3173.060

BCS

SERIE

MA.TRA

PONTE DESTRO

RIGHT RATIO AXLE

PONTE DERECHO

PONT DROIT

RECHTE ACHSE

DALLA MACCHINA
DE LA MAQUINA
DE LA MACHINE
FROM THE MACHINE
AB DER MASCHINE

★ N. 1050

G03

3/199

Pos.	Code	Q.ty	Description	Notes
31112090	31112090	0	SCREW TE M6X16 UNI 5739 8G	
31112151	31112151	0	SCREW TE M8X25 UNI 5739 8G	
31112211	31112211	0	SCREW TE M10X30 UNI 5739	
31112212	31112212	0	SCREW TE M10X35 UNI 5739	
31112326	31112326	0	SCREW TE M14X1,5X30 UNI 5740	
31211100	31211100	0	NUT M10	
31400199	31400199	0	SHIM PS 15,0x22/1,5	
31421064	31421064	0	WASHER	
31421083	31421083	0	WASHER	
31421251	31421251	0	WASHER	
31424105	31424105	0	SPRING WASHER 10,5	
35121015	35121015	0	SEEGER RING E 15 DIN 471	
37111353	37111353	0	BEARING 6207 (35X72X17) SKF	
37320154	37320154	0	GABBIA R/NI K 15X18/14 FAG	
38119820	38119820	0	O-RING 4437 (110,72X3,53)	
38214509	38214509	0	OIL SEAL 45X62X8	
39118524	39118524	0	TYRE 23X8.50-12 4PR	
39118525	39118525	0	TYRE 23X8.50-12 4PR	
39118526	39118526	0	TYRE 23X10.50-12 4PR	
39460001	39460001	0	VALVE	
51124104	51124104	0	REDUCTION BOX	
51124135	51124135	0	BRAKE DRUM DIAM.200	
52124106	52124106	0	FLANGE	
52424123	52424123	0	INGRANAGGIO OZIOSO RM ¤	
52424132	52424132	0	AXLE SHAFT	
56124397	56124397	0	EYELET	
56324138	56324138	0	BLOCK OPENING PIN	
56424122	56424122	0	PIN	
58024430	58024430	0	SPRING	
58025641	58025641	0	SHIM	
58025642	58025642	0	SHIM	
58025643	58025643	0	SHIM	
58025644	58025644	0	SHIM	
58124465	58124465	0	SHIM	

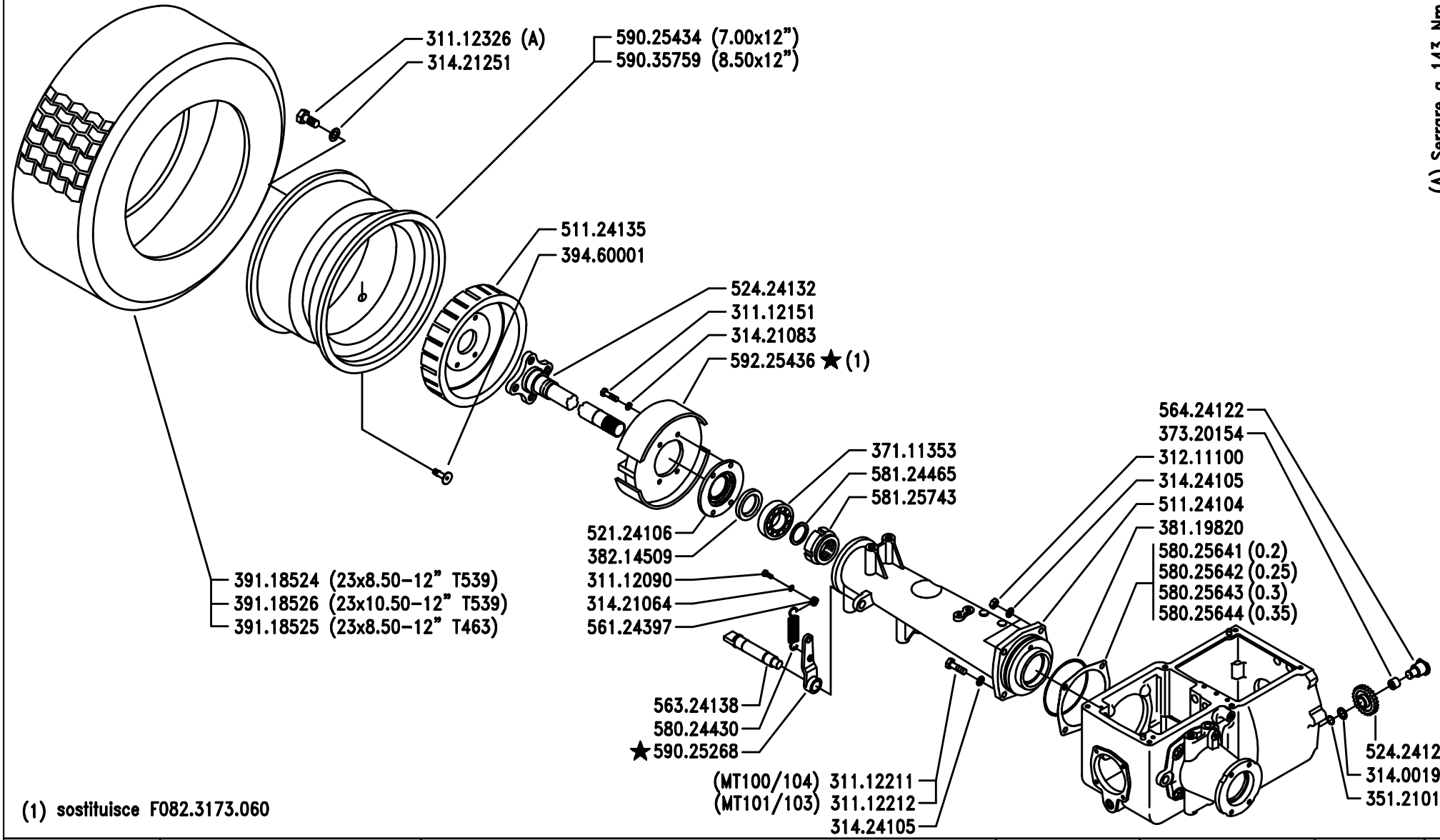

(1) sostituisce F082.3173.060

(A) Serrare a 143 Nm

BCS	SERIE MA.TRA	PONTE DESTRO RIGHT RATIO AXLE / PONT DROIT PUENTE DERECHO / RECHTE ACHSE	DALLA MACCHINA DE LA MAQUINA DE LA MACHINE FROM THE MACHINE AB DER MASCHINE ★ N. 1050	G03	3/199

Pos.	Code	Q.ty	Description	Notes
58125743	58125743	0	RING NUT	
59025268	59025268	0	LEVER	
59025434	59025434	0	RIM	
59035759	59035759	0	RIM	
59225436	59225436	0	BRAKE ELEMENT	

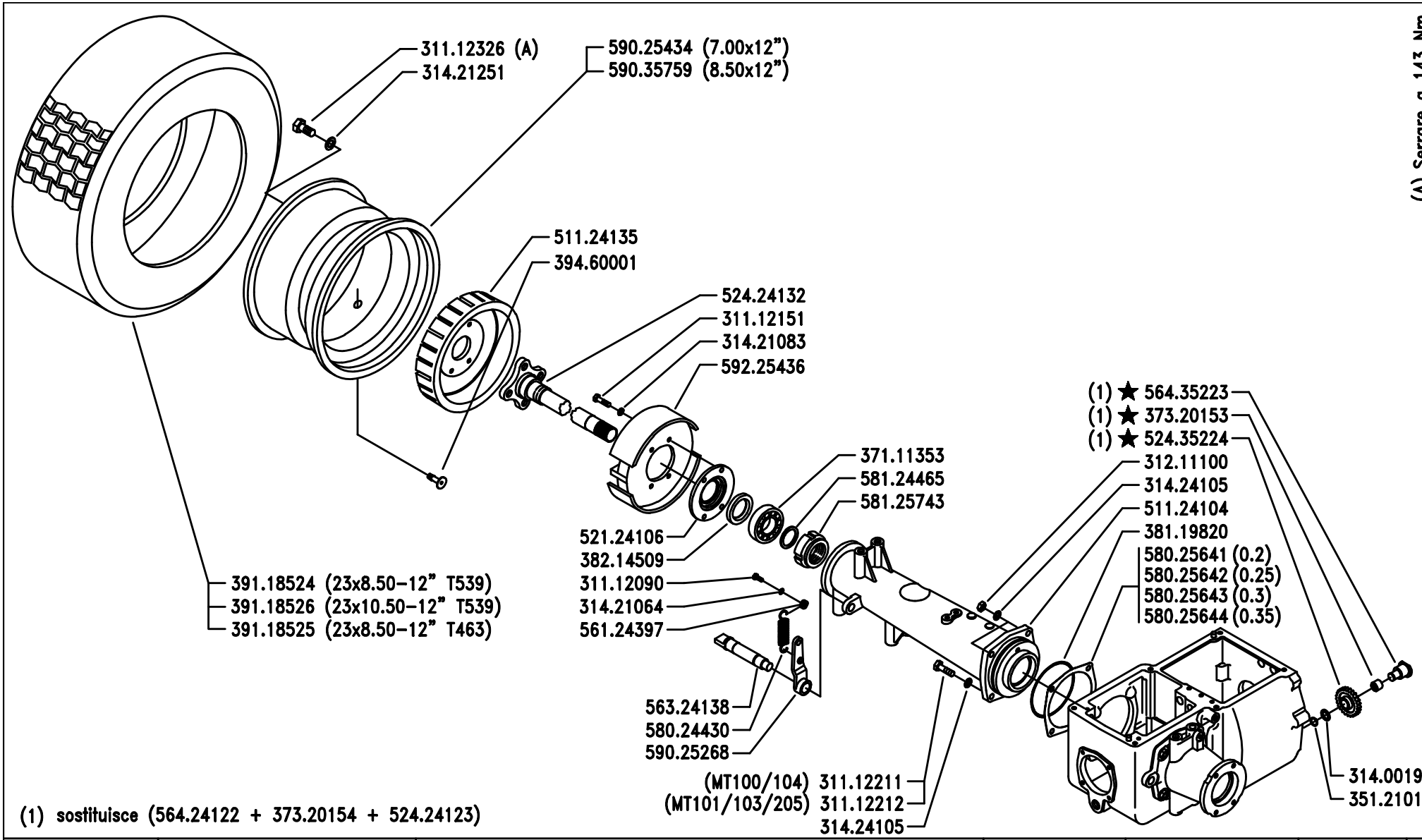

(1) sostituisce (564.24122 + 373.20154 + 524.24123)

(A) Serrare a 143 Nm

BCS

SERIE

MA.TRA

PONTE DESTRO

RIGHT RATIO AXLE

PUENTE DERECHO

PONT DROIT

RECHTE ACHSE

DALLA MACCHINA
DE LA MAQUINA
DE LA MACHINE
FROM THE MACHINE
AB DER MASCHINE

★ N. 1212

G03

9/199

Pos.	Code	Q.ty	Description	Notes
31112090	31112090	0	SCREW TE M6X16 UNI 5739 8G	
31112151	31112151	0	SCREW TE M8X25 UNI 5739 8G	
31112211	31112211	0	SCREW TE M10X30 UNI 5739	
31112212	31112212	0	SCREW TE M10X35 UNI 5739	
31112326	31112326	0	SCREW TE M14X1,5X30 UNI 5740	
31211100	31211100	0	NUT M10	
31400199	31400199	0	SHIM PS 15,0x22/1,5	
31421064	31421064	0	WASHER	
31421083	31421083	0	WASHER	
31421251	31421251	0	WASHER	
31424105	31424105	0	SPRING WASHER 10,5	
35121015	35121015	0	SEEGER RING E 15 DIN 471	
37111353	37111353	0	BEARING 6207 (35X72X17) SKF	
37320153	37320153	0	ROLLER CAGE K 15X18/16	
38119820	38119820	0	O-RING 4437 (110,72X3,53)	
38214509	38214509	0	OIL SEAL 45X62X8	
39118524	39118524	0	TYRE 23X8.50-12 4PR	
39118525	39118525	0	TYRE 23X8.50-12 4PR	
39118526	39118526	0	TYRE 23X10.50-12 4PR	
39460001	39460001	0	VALVE	
51124104	51124104	0	REDUCTION BOX	
51124135	51124135	0	BRAKE DRUM DIAM.200	
52124106	52124106	0	FLANGE	
52424132	52424132	0	AXLE SHAFT	
52435224	52435224	0	GEAR	
56124397	56124397	0	EYELET	
56324138	56324138	0	BLOCK OPENING PIN	
56435223	56435223	0	PIN	
58024430	58024430	0	SPRING	
58025641	58025641	0	SHIM	
58025642	58025642	0	SHIM	
58025643	58025643	0	SHIM	
58025644	58025644	0	SHIM	
58124465	58124465	0	SHIM	

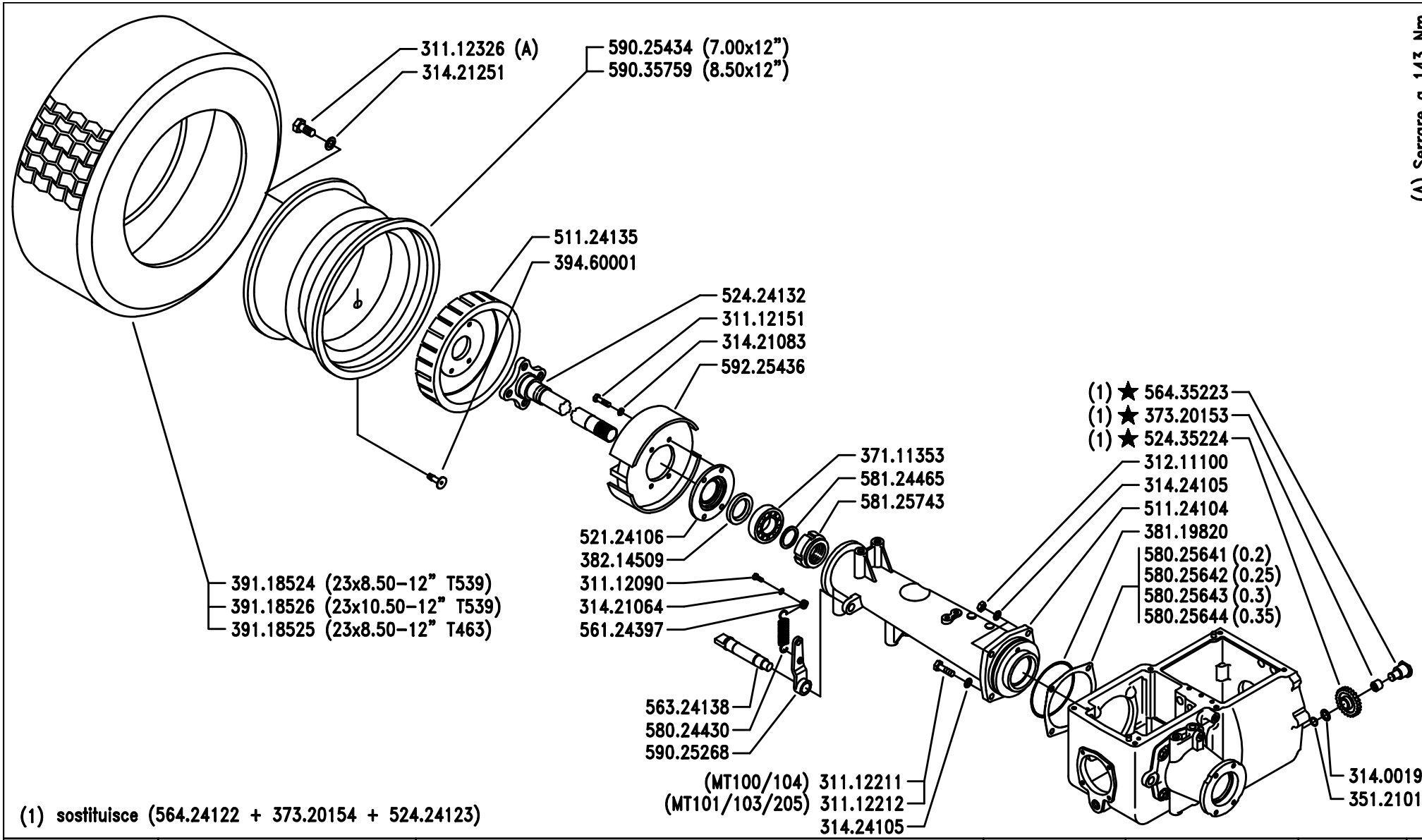

(1) sostituisce (564.24122 + 373.20154 + 524.24123)

(A) Serrare a 143 Nm

SERIE

MA.TRA

PONTE DESTRO

RIGHT RATIO AXLE

PUENTE DERECHO

PONT DROIT

RECHTE ACHSE

DALLA MACCHINA
DE LA MAQUINA
DE LA MACHINE
FROM THE MACHINE
AB DER MASCHINE

★ N. 1212

G03

9/199

Pos.	Code	Q.ty	Description	Notes
58125743	58125743	0	RING NUT	
59025268	59025268	0	LEVER	
59025434	59025434	0	RIM	
59035759	59035759	0	RIM	
59225436	59225436	0	BRAKE ELEMENT	

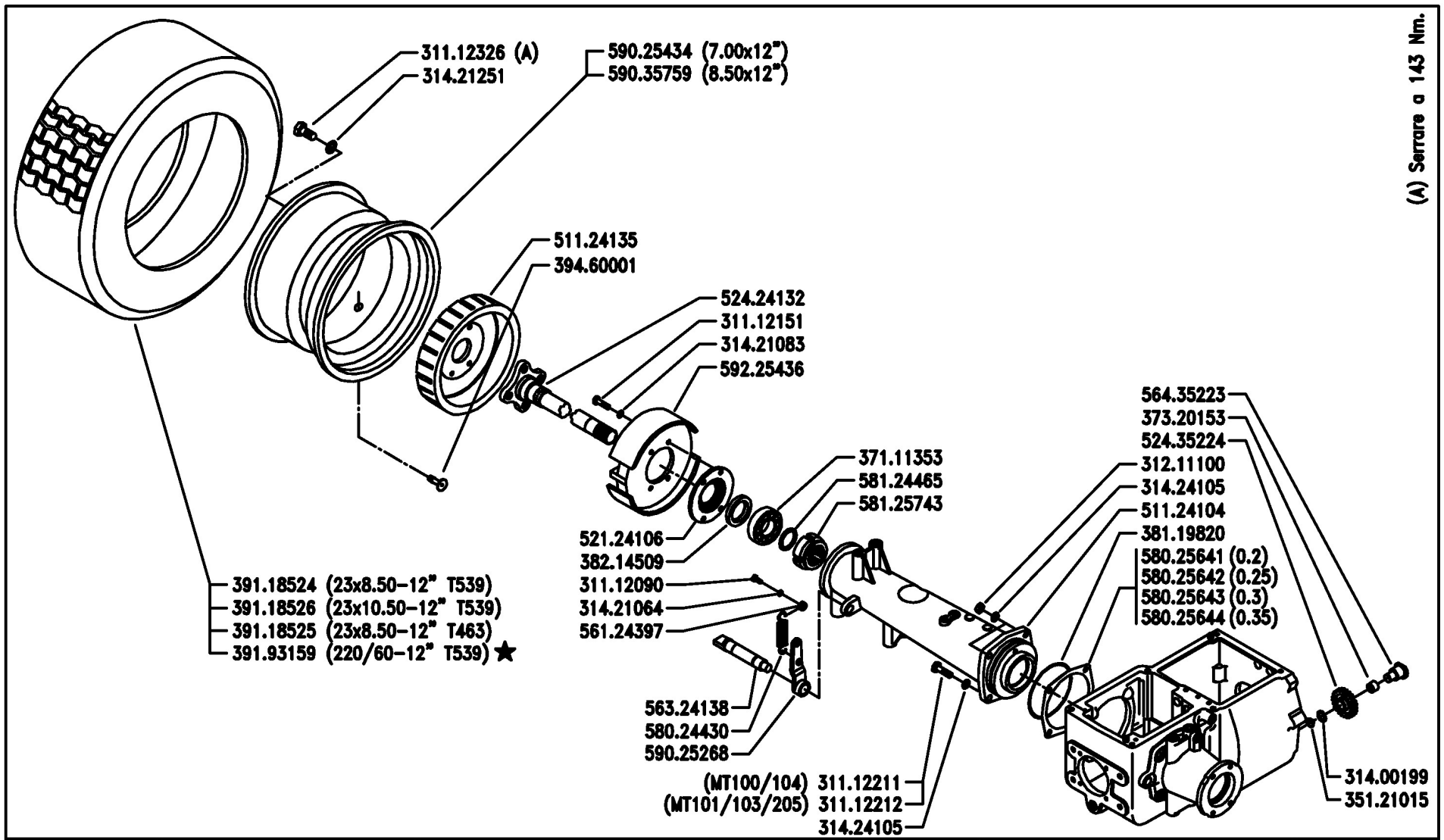

BCS	SERIE MA.TRA	PONTE DESTRO RIGHT RATIO AXLE — PONT DROIT PUENTE DERECHO — RECHTE ACHSE	DALLA MACCHINA DE LA MAQUINA DE LA MACHINE FROM THE MACHINE AB DER MASCHINE ★N.	AGGIORNAMENTO APLAZAMIENTO MISE A JOUR REVISION ANPASSUNG	G03 Rev. 4 06/2005

DITE - BCS 32G03T04R

Pos.	Code	Q.ty	Description	Notes
31112090	31112090	1	SCREW TE M6X16 UNI 5739 8G	
31112151	31112151	1	SCREW TE M8X25 UNI 5739 8G	
31112211	31112211	1	SCREW TE M10X30 UNI 5739	
31112212	31112212	1	SCREW TE M10X35 UNI 5739	
31112326	31112326	1	SCREW TE M14X1,5X30 UNI 5740	
31211100	31211100	1	NUT M10	
31400199	31400199	1	SHIM PS 15,0x22/1,5	
31421064	31421064	1	WASHER	
31421083	31421083	1	WASHER	
31421251	31421251	1	WASHER	
31424105	31424105	1	SPRING WASHER 10,5	
35121015	35121015	1	SEEGER RING E 15 DIN 471	
37111353	37111353	1	BEARING 6207 (35X72X17) SKF	
37320153	37320153	1	ROLLER CAGE K 15X18/16	
38119820	38119820	1	O-RING 4437 (110,72X3,53)	
38214509	38214509	1	OIL SEAL 45X62X8	
39118524	39118524	1	TYRE 23X8.50-12 4PR	
39118525	39118525	1	TYRE 23X8.50-12 4PR	
39118526	39118526	1	TYRE 23X10.50-12 4PR	
39193159	39193159	1	TYRE 220/60-12TL	
39460001	39460001	1	VALVE	
51124104	51124104	1	REDUCTION BOX	
51124135	51124135	1	BRAKE DRUM DIAM.200	
52124106	52124106	1	FLANGE	
52424132	52424132	1	AXLE SHAFT	
52435224	52435224	1	GEAR	
56124397	56124397	1	EYELET	
56324138	56324138	1	BLOCK OPENING PIN	
56435223	56435223	1	PIN	
58024430	58024430	1	SPRING	
58025641	58025641	1	SHIM	
58025642	58025642	1	SHIM	
58025643	58025643	1	SHIM	
58025644	58025644	1	SHIM	

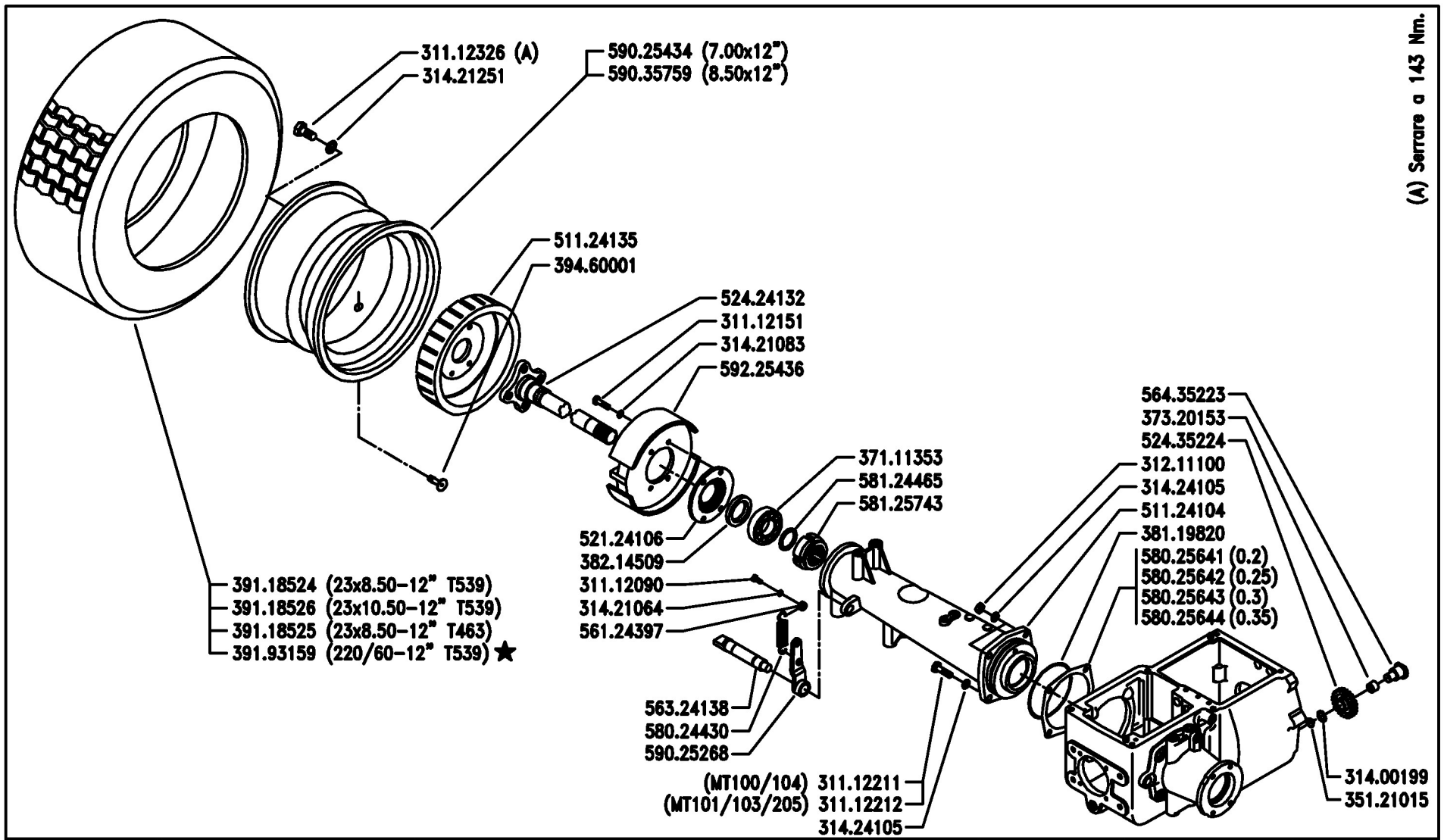

BCS	SERIE MA.TRA	PONTE DESTRO RIGHT RATIO AXLE — PONT DROIT PUENTE DERECHO — RECHTE ACHSE	DALLA MACCHINA DE LA MAQUINA DE LA MACHINE FROM THE MACHINE AB DER MASCHINE ★N.	AGGIORNAMENTO APLAZAMIENTO MISE A JOUR REVISION ANPASSUNG	G03 Rev. 4 06/2005

DITE - BCS 32G03T04R

Pos.	Code	Q.ty	Description	Notes
58124465	58124465	1	SHIM	
58125743	58125743	1	RING NUT	
59025268	59025268	1	LEVER	
59025434	59025434	1	RIM	
59035759	59035759	1	RIM	
59225436	59225436	1	BRAKE ELEMENT	

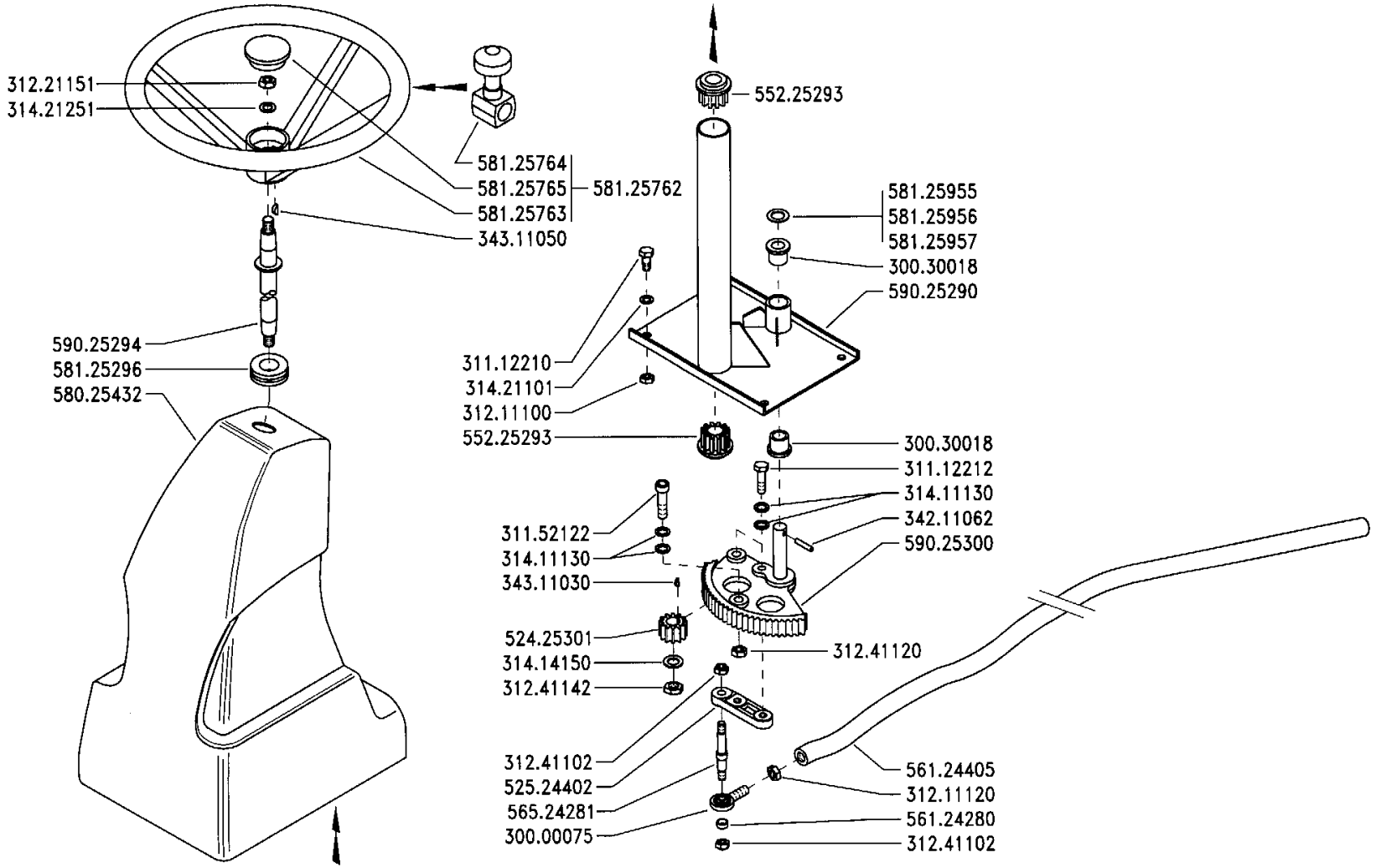

BCS

SERIE

MA.TRA

GRUPPO STERZO

STEERING UNIT

GROUPE DE DIRECTION

GRUPO DIRECCIÓN

LENKUNG

DALLA MACCHINA
DE LA MAQUINA
DE LA MACHINE
FROM THE MACHINE
AB DER MASCHINE

N.

PRODUZIONE 1998	H01
PRODUCCIÓN 1998	
PRODUCTION 1998	
PRODUCTION 1998	1/1999
PRODUKTION 1998	

Mod. 0

2ENNE

Pos.	Code	Q.ty	Description	Notes
30000075	30000075	0	TERMINAL	
30030018	30030018	0	BUSHING 18x25x25	
31112210	31112210	0	SCREW TE M10X20 UNI 5739	
31112212	31112212	0	SCREW TE M10X35 UNI 5739	
31152122	31152122	0	SCREW TCEI M12X40 UNI 5931	
31211100	31211100	0	NUT M10	
31211120	31211120	0	NUT M12 UNI 5588 6S	
31221151	31221151	0	NUT M14X1,5	
31241102	31241102	0	SELFLOCK NUT M10x1,25	
31241120	31241120	0	SELFLOCK NUT M12	
31241142	31241142	0	SELFLOCK NUT M14x1,5	
31411130	31411130	0	WASHER 13x24	
31414150	31414150	0	WASHER 15	
31421101	31421101	0	WASHER	
31421251	31421251	0	WASHER	
34211062	34211062	0	ROLL PIN	
34311030	34311030	0	KEY 3X5 UNI 6606	
34311050	34311050	0	KEY 5X6,5 UNI 6606	
52425301	52425301	0	PINION	
52524402	52524402	0	LEVER	
55225293	55225293	0	SLEEVE	
56124280	56124280	0	SPACER	
56124405	56124405	0	ROD	
56524281	56524281	0	PIN	
58025432	58025432	0	BRACE COVER	
58125296	58125296	0	CABLE GLAND	
58125762	58125762	0	COMPLETE STEERING WHEEL	
58125763	58125763	0	STEERING WHEEL	
58125764	58125764	0	HANDLE	
58125765	58125765	0	PLUG	
58125955	58125955	0	SHIM	
58125956	58125956	0	SHIM	
58125957	58125957	0	SHIM	
59025290	59025290	0	STEERING COLUMN	

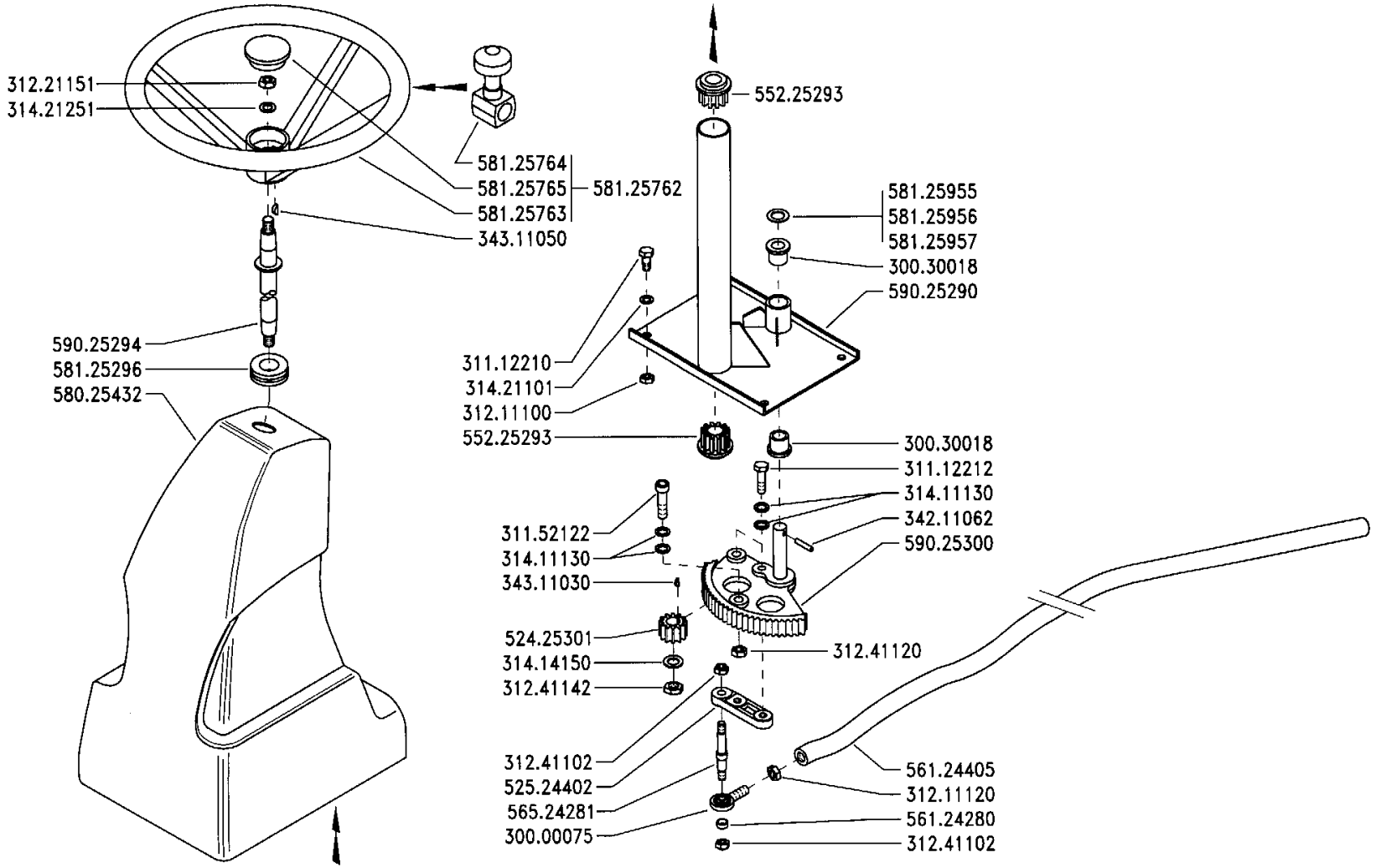

BCS

SERIE

MA.TRA

GRUPPO STERZO

STEERING UNIT

GROUPE DE DIRECTION

GRUPO DIRECCIÓN

LENKUNG

DALLA MACCHINA
DE LA MAQUINA
DE LA MACHINE
FROM THE MACHINE
AB DER MASCHINE

N.

PRODUZIONE 1998	H01
PRODUCCIÓN 1998	
PRODUCTION 1998	
PRODUCTION 1998	1/1999
PRODUKTION 1998	

Mod. 0

2ENNE

Pos.	Code	Q.ty	Description	Notes
59025294	59025294	0	STEERING WHEEL COMPLETE AXLE	
59025300	59025300	0	SECTOR	

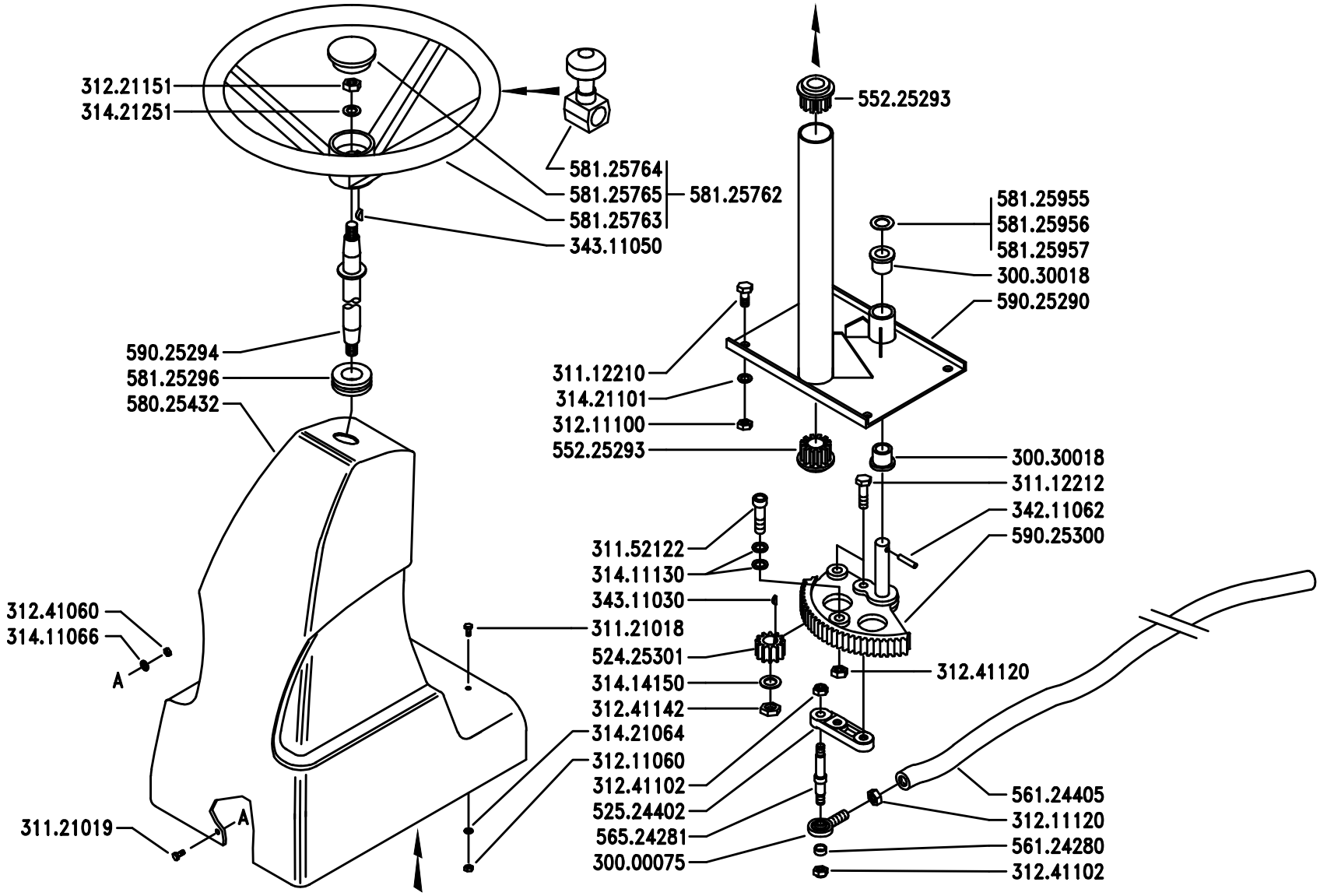

BCS

SERIE

MA.TRA

GRUPPO STERZO

STEERING UNIT

GROUPE DE DIRECTION

GRUPO DIRECCIÓN

LENKUNG

DALLA MACCHINA
DE LA MAQUINA
DE LA MACHINE
FROM THE MACHINE
AB DER MASCHINE

N.

Sostituisce	H01/0
Sostituye	H01/0
Remplace	H01/0
Replaces	H01/0
Ersätzt	H01/0

H01

2/199

Pos.	Code	Q.ty	Description	Notes
30000075	30000075	0	TERMINAL	
30030018	30030018	0	BUSHING 18x25x25	
31112210	31112210	0	SCREW TE M10X20 UNI 5739	
31112212	31112212	0	SCREW TE M10X35 UNI 5739	
31121018	31121018	0	SCREW TBCEI FLANG. M6X16	
31121019	31121019	0	SCREW TBCEI FLANG. M6X20	
31152122	31152122	0	SCREW TCEI M12X40 UNI 5931	
31211060	31211060	0	HEXAGONAL NUT M8	
31211100	31211100	0	NUT M10	
31211120	31211120	0	NUT M12 UNI 5588 6S	
31221151	31221151	0	NUT M14X1,5	
31241060	31241060	0	HEXAGON SELFLOCK NUT M6	
31241102	31241102	0	SELFLOCK NUT M10x1,25	
31241120	31241120	0	SELFLOCK NUT M12	
31241142	31241142	0	SELFLOCK NUT M14x1,5	
31411066	31411066	0	WASHER 6,6x18	
31411130	31411130	0	WASHER 13x24	
31414150	31414150	0	WASHER 15	
31421064	31421064	0	WASHER	
31421101	31421101	0	WASHER	
31421251	31421251	0	WASHER	
34211062	34211062	0	ROLL PIN	
34311030	34311030	0	KEY 3X5 UNI 6606	
34311050	34311050	0	KEY 5X6,5 UNI 6606	
52425301	52425301	0	PINION	
52524402	52524402	0	LEVER	
55225293	55225293	0	SLEEVE	
56124280	56124280	0	SPACER	
56124405	56124405	0	ROD	
56524281	56524281	0	PIN	
58025432	58025432	0	BRACE COVER	
58125296	58125296	0	CABLE GLAND	
58125762	58125762	0	COMPLETE STEERING WHEEL	
58125763	58125763	0	STEERING WHEEL	

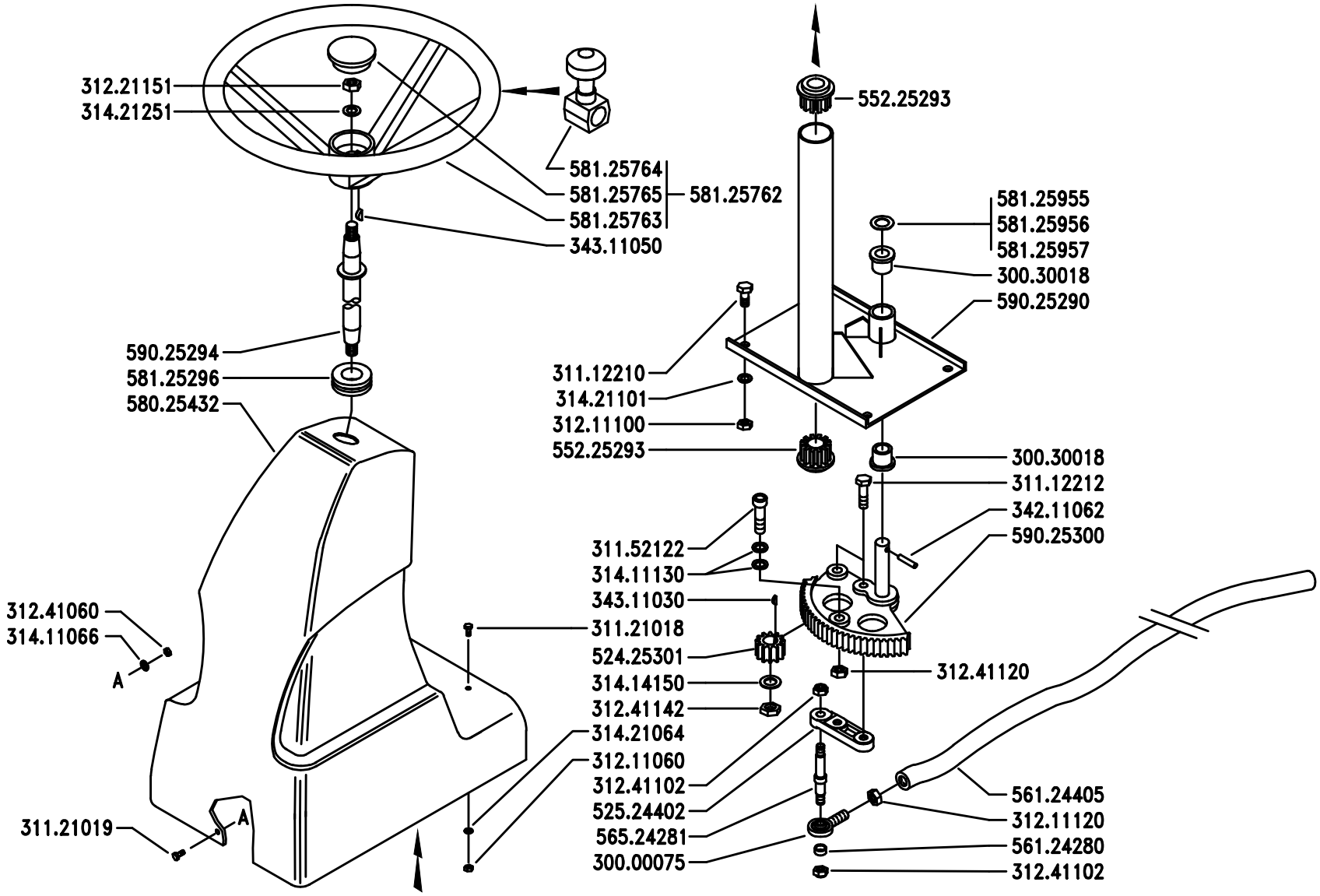

BCS

SERIE

MA.TRA

GRUPPO STERZO

STEERING UNIT

GROUPE DE DIRECTION

GRUPO DIRECCIÓN

LENKUNG

DALLA MACCHINA
DE LA MAQUINA
DE LA MACHINE
FROM THE MACHINE
AB DER MASCHINE

N.

Sostituisce	H01/0
Sostituye	H01/0
Remplace	H01/0
Replaces	H01/0
Ersätzt	H01/0

H01

2/199

Pos.	Code	Q.ty	Description	Notes
58125764	58125764	0	HANDLE	
58125765	58125765	0	PLUG	
58125955	58125955	0	SHIM	
58125956	58125956	0	SHIM	
58125957	58125957	0	SHIM	
59025290	59025290	0	STEERING COLUMN	
59025294	59025294	0	STEERING WHEEL COMPLETE AXLE	
59025300	59025300	0	SECTOR	

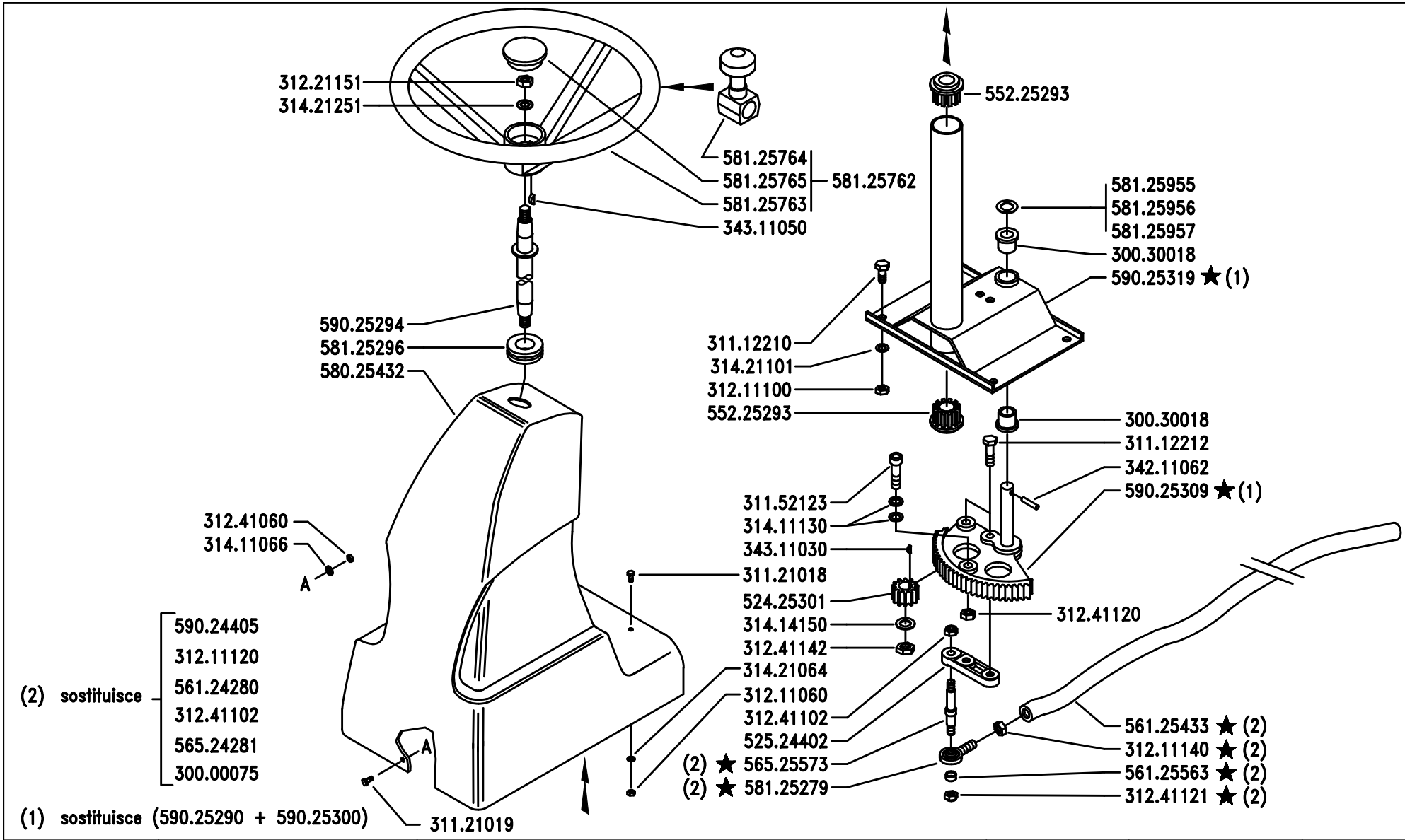

BCS

SERIE

MA.TRA

GRUPPO STERZO

STEERING UNIT

GROUPE DE DIRECTION

GRUPO DIRECCIÓN

LENKUNG

DALLA MACCHINA
DE LA MAQUINA
DE LA MACHINE
FROM THE MACHINE
AB DER MASCHINE

★ N.

AGGIORNAMENTO
APLAZAMIENTO
MISE A JOUR
REVISION
ANPASSUNG

H01

3/1999

Pos.	Code	Q.ty	Description	Notes
30030018	30030018	0	BUSHING 18x25x25	
31112210	31112210	0	SCREW TE M10X20 UNI 5739	
31112212	31112212	0	SCREW TE M10X35 UNI 5739	
31121018	31121018	0	SCREW TBCEI FLANG. M6X16	
31121019	31121019	0	SCREW TBCEI FLANG. M6X20	
31152123	31152123	0	SCREW TCEI M12X45 UNI 5931	
31211060	31211060	0	HEXAGONAL NUT M8	
31211100	31211100	0	NUT M10	
31211140	31211140	0	NUT M14	
31221151	31221151	0	NUT M14X1,5	
31241060	31241060	0	HEXAGON SELFLOCK NUT M6	
31241102	31241102	0	SELFLOCK NUT M10x1,25	
31241120	31241120	0	SELFLOCK NUT M12	
31241121	31241121	0	SELFLOCK NUT M12	
31241142	31241142	0	SELFLOCK NUT M14x1,5	
31411066	31411066	0	WASHER 6,6x18	
31411130	31411130	0	WASHER 13x24	
31414150	31414150	0	WASHER 15	
31421064	31421064	0	WASHER	
31421101	31421101	0	WASHER	
31421251	31421251	0	WASHER	
34211062	34211062	0	ROLL PIN	
34311030	34311030	0	KEY 3X5 UNI 6606	
34311050	34311050	0	KEY 5X6,5 UNI 6606	
52425301	52425301	0	PINION	
52524402	52524402	0	LEVER	
55225293	55225293	0	SLEEVE	
56125433	56125433	0	ROD	
56125563	56125563	0	SPACER	
56525573	56525573	0	PIN	
58025432	58025432	0	BRACE COVER	
58125279	58125279	0	TERMINAL	
58125296	58125296	0	CABLE GLAND	
58125762	58125762	0	COMPLETE STEERING WHEEL	

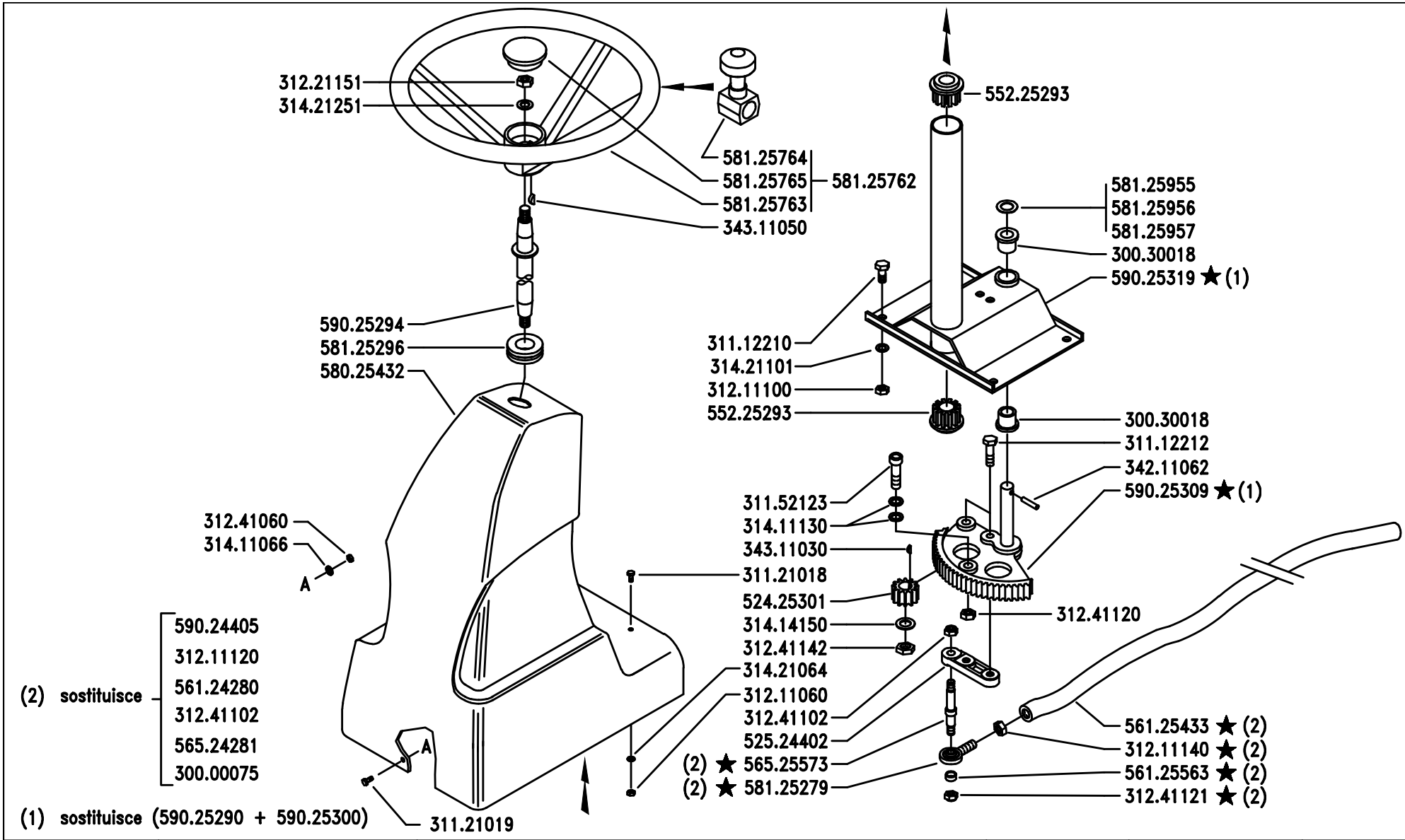

BCS

SERIE

MA.TRA

GRUPPO STERZO

STEERING UNIT

GROUPE DE DIRECTION

GRUPO DIRECCIÓN

LENKUNG

DALLA MACCHINA
DE LA MAQUINA
DE LA MACHINE
FROM THE MACHINE
AB DER MASCHINE

★ N.

AGGIORNAMENTO
APLAZAMIENTO
MISE A JOUR
REVISION
ANPASSUNG

H01

3/1999

Pos.	Code	Q.ty	Description	Notes
58125763	58125763	0	STEERING WHEEL	
58125764	58125764	0	HANDLE	
58125765	58125765	0	PLUG	
58125955	58125955	0	SHIM	
58125956	58125956	0	SHIM	
58125957	58125957	0	SHIM	
59025294	59025294	0	STEERING WHEEL COMPLETE AXLE	
59025309	59025309	0	SECTOR	
59025319	59025319	0	STEERING COLUMN	

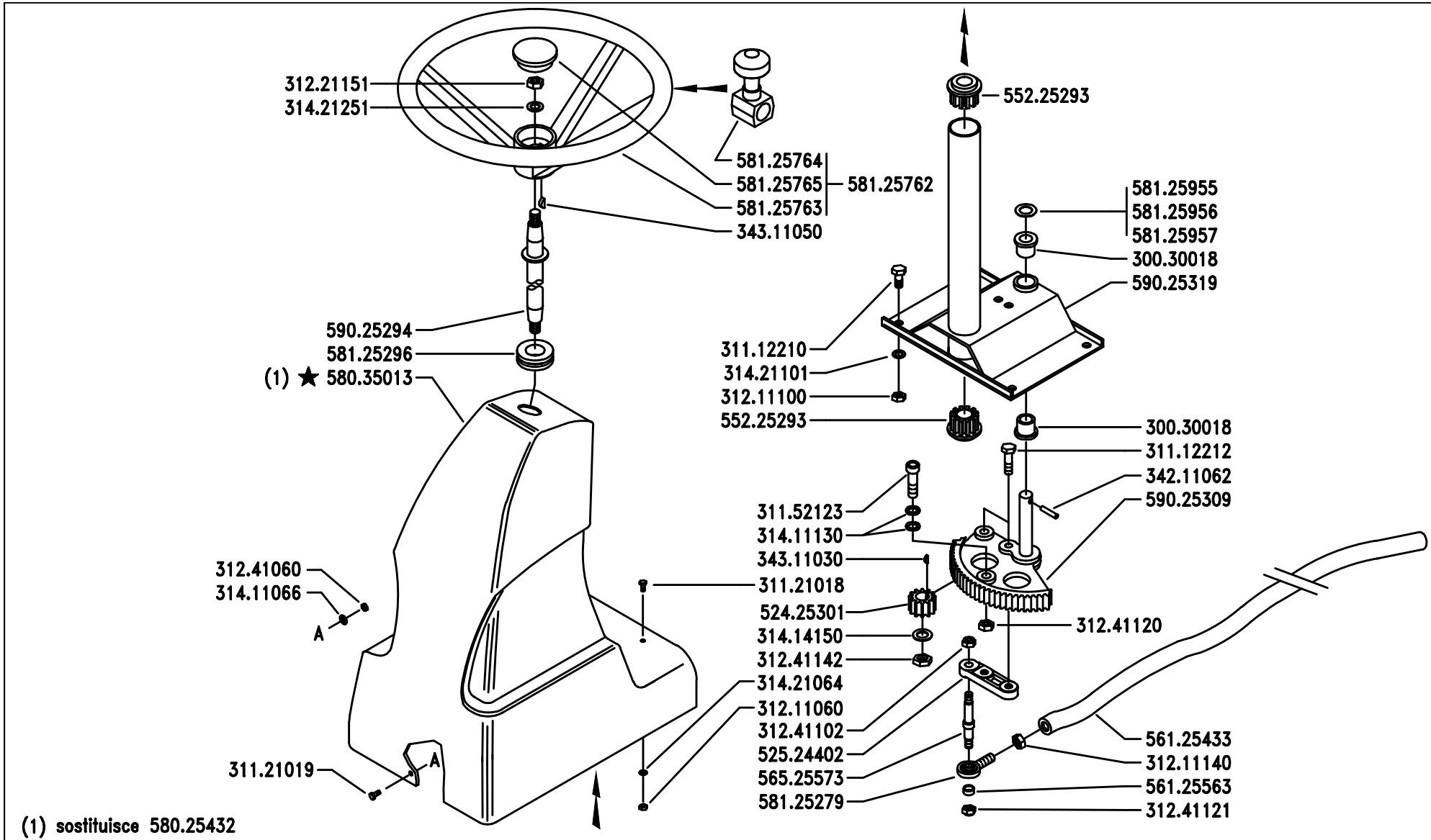

(1) sostituisce 580.25432

BCS	SERIE MA.TRA	GRUPPO STERZO STEERING UNIT / GROUPE DE DIRECTION GRUPO DIRECCIÓN / LENKUNG	DALLA MACCHINA DE LA MAQUINA DE LA MACHINE FROM THE MACHINE AB DER MASCHINE ★ N.	AGGIORNAMENTO APLAZAMIENTO MISE A JOUR REVISION ANPASSUNG	H01 4/199

Pos.	Code	Q.ty	Description	Notes
30030018	30030018	0	BUSHING 18x25x25	
31112210	31112210	0	SCREW TE M10X20 UNI 5739	
31112212	31112212	0	SCREW TE M10X35 UNI 5739	
31121018	31121018	0	SCREW TBCEI FLANG. M6X16	
31121019	31121019	0	SCREW TBCEI FLANG. M6X20	
31152123	31152123	0	SCREW TCEI M12X45 UNI 5931	
31211060	31211060	0	HEXAGONAL NUT M8	
31211100	31211100	0	NUT M10	
31211140	31211140	0	NUT M14	
31221151	31221151	0	NUT M14X1,5	
31241060	31241060	0	HEXAGON SELFLOCK NUT M6	
31241102	31241102	0	SELFLOCK NUT M10x1,25	
31241120	31241120	0	SELFLOCK NUT M12	
31241121	31241121	0	SELFLOCK NUT M12	
31241142	31241142	0	SELFLOCK NUT M14x1,5	
31411066	31411066	0	WASHER 6,6x18	
31411130	31411130	0	WASHER 13x24	
31414150	31414150	0	WASHER 15	
31421064	31421064	0	WASHER	
31421101	31421101	0	WASHER	
31421251	31421251	0	WASHER	
34211062	34211062	0	ROLL PIN	
34311030	34311030	0	KEY 3X5 UNI 6606	
34311050	34311050	0	KEY 5X6,5 UNI 6606	
52425301	52425301	0	PINION	
52524402	52524402	0	LEVER	
55225293	55225293	0	SLEEVE	
56125433	56125433	0	ROD	
56125563	56125563	0	SPACER	
56525573	56525573	0	PIN	
58035013	58035013	0	GUARD	
58125279	58125279	0	TERMINAL	
58125296	58125296	0	CABLE GLAND	
58125762	58125762	0	COMPLETE STEERING WHEEL	

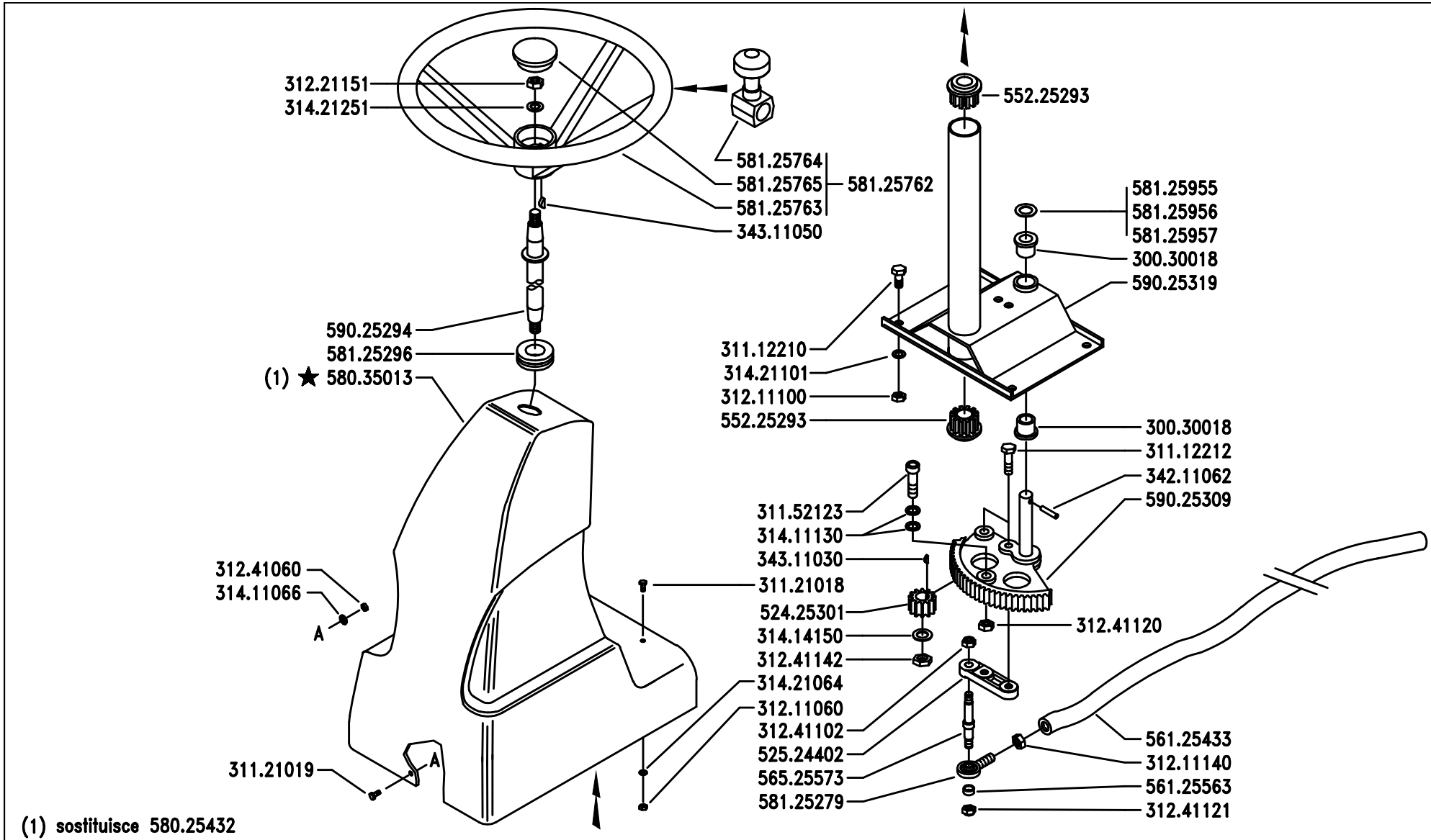

(1) sostituisce 580.25432

BCS	SERIE MA.TRA	GRUPPO STERZO STEERING UNIT / GROUPE DE DIRECTION GRUPO DIRECCIÓN / LENKUNG	DALLA MACCHINA DE LA MAQUINA DE LA MACHINE FROM THE MACHINE AB DER MASCHINE ★ N.	AGGIORNAMENTO APLAZAMIENTO MISE A JOUR REVISION ANPASSUNG	H01 4/199

Pos.	Code	Q.ty	Description	Notes
58125763	58125763	0	STEERING WHEEL	
58125764	58125764	0	HANDLE	
58125765	58125765	0	PLUG	
58125955	58125955	0	SHIM	
58125956	58125956	0	SHIM	
58125957	58125957	0	SHIM	
59025294	59025294	0	STEERING WHEEL COMPLETE AXLE	
59025309	59025309	0	SECTOR	
59025319	59025319	0	STEERING COLUMN	

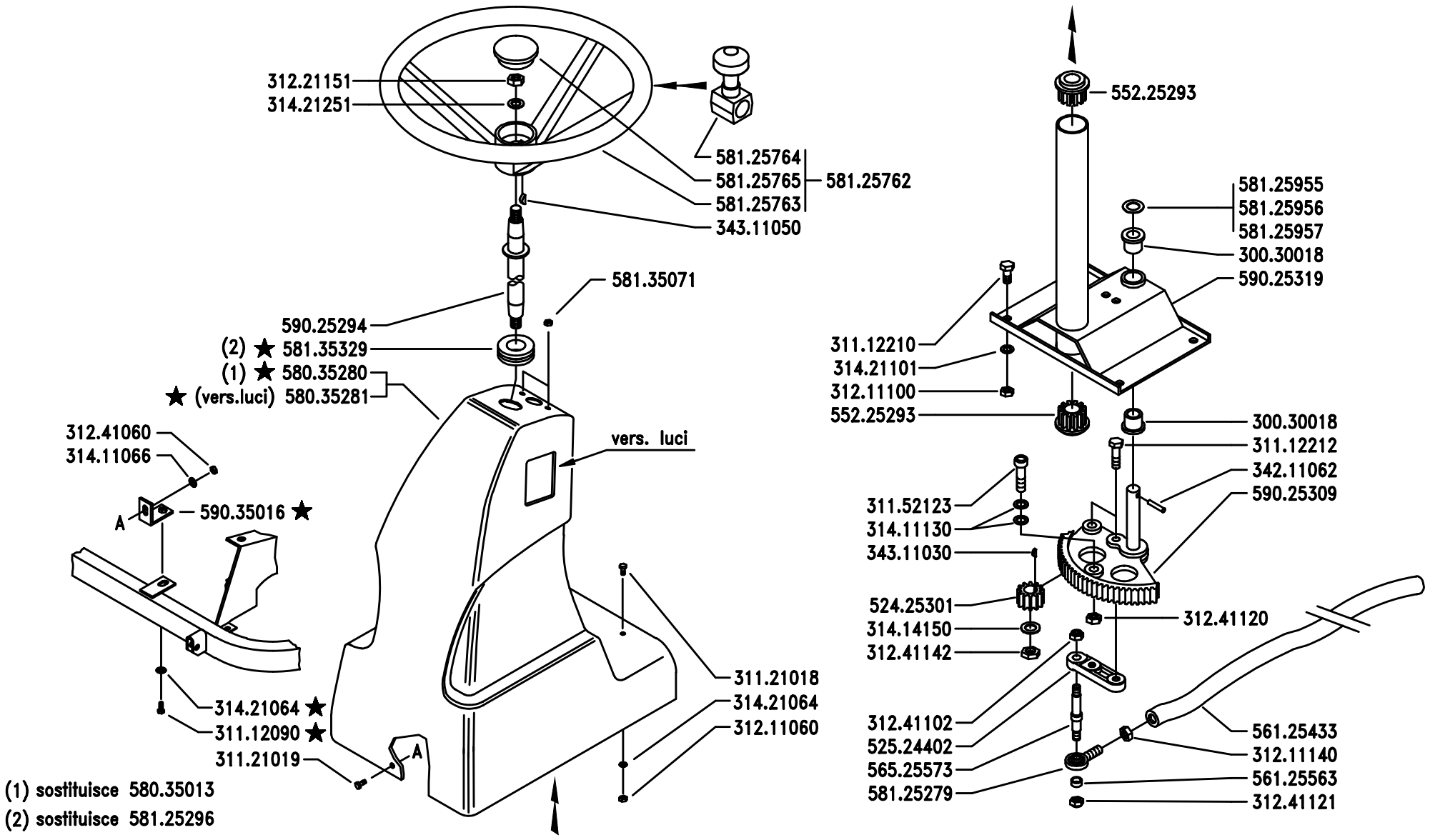

BCS

SERIE

MA.TRA

GRUPPO STERZO (MT100 – 101 – 104)

STEERING UNIT (MT100 – MT101 – MT104)

GROUPE DE DIRECTION (MT100 – MT101 – MT104)

GRUPO DIRECCIÓN (MT100 – MT101 – MT104)

LENKUNG (MT100 – MT101 – MT104)

DALLA MACCHINA
DE LA MAQUINA
DE LA MACHINE
FROM THE MACHINE
AB DER MASCHINE

★ N. 1214

H01

1/200

Pos.	Code	Q.ty	Description	Notes
30030018	30030018	0	BUSHING 18x25x25	
31112090	31112090	0	SCREW TE M6X16 UNI 5739 8G	
31112210	31112210	0	SCREW TE M10X20 UNI 5739	
31112212	31112212	0	SCREW TE M10X35 UNI 5739	
31121018	31121018	0	SCREW TBCEI FLANG. M6X16	
31121019	31121019	0	SCREW TBCEI FLANG. M6X20	
31152123	31152123	0	SCREW TCEI M12X45 UNI 5931	
31211060	31211060	0	HEXAGONAL NUT M8	
31211100	31211100	0	NUT M10	
31211140	31211140	0	NUT M14	
31221151	31221151	0	NUT M14X1,5	
31241060	31241060	0	HEXAGON SELFLOCK NUT M6	
31241102	31241102	0	SELFLOCK NUT M10x1,25	
31241120	31241120	0	SELFLOCK NUT M12	
31241121	31241121	0	SELFLOCK NUT M12	
31241142	31241142	0	SELFLOCK NUT M14x1,5	
31411066	31411066	0	WASHER 6,6x18	
31411130	31411130	0	WASHER 13x24	
31414150	31414150	0	WASHER 15	
31421064	31421064	0	WASHER	
31421101	31421101	0	WASHER	
31421251	31421251	0	WASHER	
34211062	34211062	0	ROLL PIN	
34311030	34311030	0	KEY 3X5 UNI 6606	
34311050	34311050	0	KEY 5X6,5 UNI 6606	
52425301	52425301	0	PINION	
52524402	52524402	0	LEVER	
55225293	55225293	0	SLEEVE	
56125433	56125433	0	ROD	
56125563	56125563	0	SPACER	
56525573	56525573	0	PIN	
58035280	58035280	0	GUARD	
58035281	58035281	0	GUARD	
58125279	58125279	0	TERMINAL	

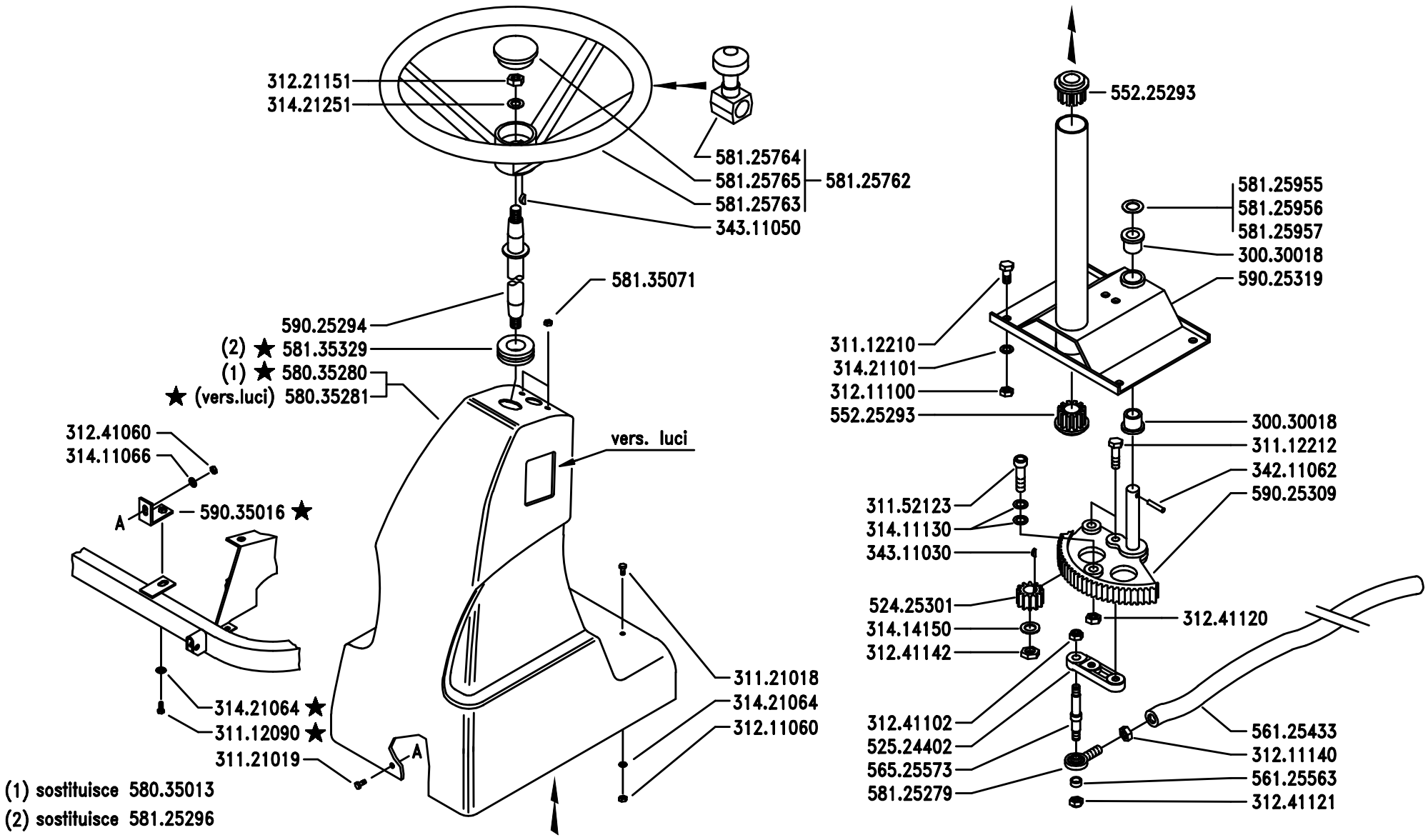

BCS

SERIE

MA.TRA

GRUPPO STERZO (MT100 – 101 – 104)

STEERING UNIT (MT100 – MT101 – MT104)

GROUPE DE DIRECTION (MT100 – MT101 – MT104)

GRUPO DIRECCIÓN (MT100 – MT101 – MT104)

LENKUNG (MT100 – MT101 – MT104)

DALLA MACCHINA
DE LA MAQUINA
DE LA MACHINE
FROM THE MACHINE
AB DER MASCHINE

★ N. 1214

H01

1/200

Pos.	Code	Q.ty	Description	Notes
58125762	58125762	0	COMPLETE STEERING WHEEL	
58125763	58125763	0	STEERING WHEEL	
58125764	58125764	0	HANDLE	
58125765	58125765	0	PLUG	
58125955	58125955	0	SHIM	
58125956	58125956	0	SHIM	
58125957	58125957	0	SHIM	
58135071	58135071	0	CAGED NUT M4	
58135329	58135329	0	CABLE GLAND	
59025294	59025294	0	STEERING WHEEL COMPLETE AXLE	
59025309	59025309	0	SECTOR	
59025319	59025319	0	STEERING COLUMN	
59035016	59035016	0	SMALL PLATE	

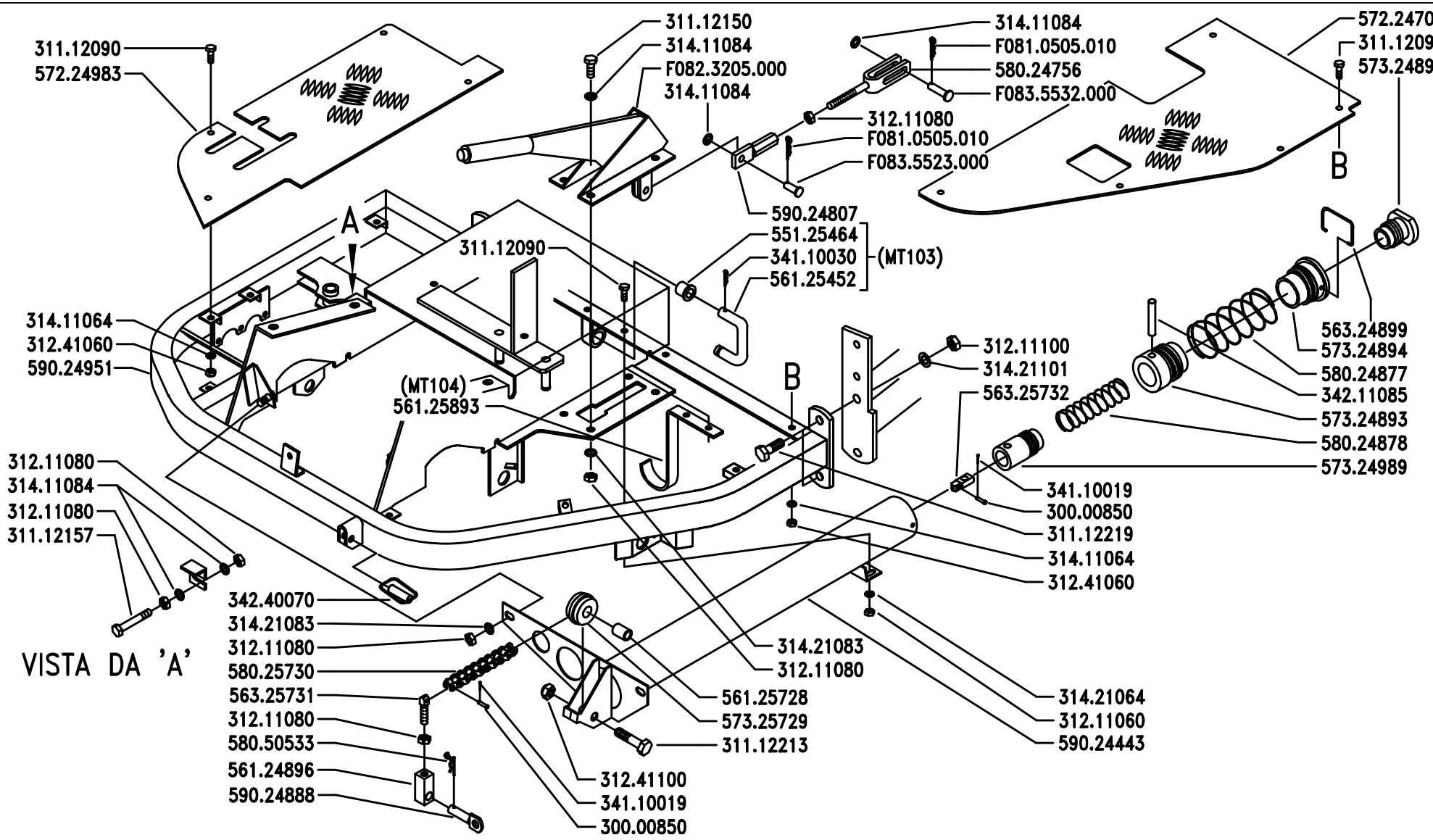

BCS	SERIE MA.TRA	TELAIO ANTERIORE (MT103 – MT104) FRONT FRAME (MT103 – MT104) CHÂSSIS ANTÉRIEUR (MT103 – MT104) CHASIS DELANTERO (MT103 – MT104) VORDERWAGEN (MT103 – MT104)	DALLA MACCHINA DE LA MAQUINA DE LA MACHINE FROM THE MACHINE AB DER MASCHINE N.	Sostituisce I02/0 Sostituye I02/0 Remplace I02/0 Replaces I02/0 Ersätzt I02/0	I02 2/199

Pos.	Code	Q.ty	Description	Notes
30000850	30000850	0	PIN 3h14	
31112090	31112090	0	SCREW TE M6X16 UNI 5739 8G	
31112150	31112150	0	SCREW TE M8X20 UNI 5739 8G	
31112157	31112157	0	SCREW TE M8X50 UNI 5739 8G	
31112213	31112213	0	SCREW TE M10X40 UNI 5739	
31112219	31112219	0	SCREW TE M10X25 UNI 5739	
31211060	31211060	0	HEXAGONAL NUT M8	
31211080	31211080	0	NUT M8	
31211100	31211100	0	NUT M10	
31241060	31241060	0	HEXAGON SELFLOCK NUT M6	
31241100	31241100	0	SELFLOCK HEXAGON NUT M10	
31411064	31411064	0	WASHER 6,4x12,5	
31411084	31411084	0	WASHER 8,4x17	
31421064	31421064	0	WASHER	
31421083	31421083	0	WASHER	
31421101	31421101	0	WASHER	
34110019	34110019	0	SPLIT PIN	
34110030	34110030	0	SPLIT PIN A3X20 UNI 1336	
34211085	34211085	0	ROLL PIN	
34240070	34240070	0	PIN D=7	
55125464	55125464	0	BUSHING	
56124896	56124896	0	SMALL BLOCK	
56125452	56125452	0	U BOLT	
56125728	56125728	0	SLEEVE	
56125893	56125893	0	HOLDER	
56324899	56324899	0	STOP	
56325731	56325731	0	REGISTER	
56325732	56325732	0	CONNECTION	
57224702	57224702	0	LEFT FOOTBOARD	
57224983	57224983	0	RIGHT FOOTBOARD	
57324893	57324893	0	RING NUT	
57324894	57324894	0	RING NUT	
57324895	57324895	0	RING NUT	
57324989	57324989	0	RING NUT	

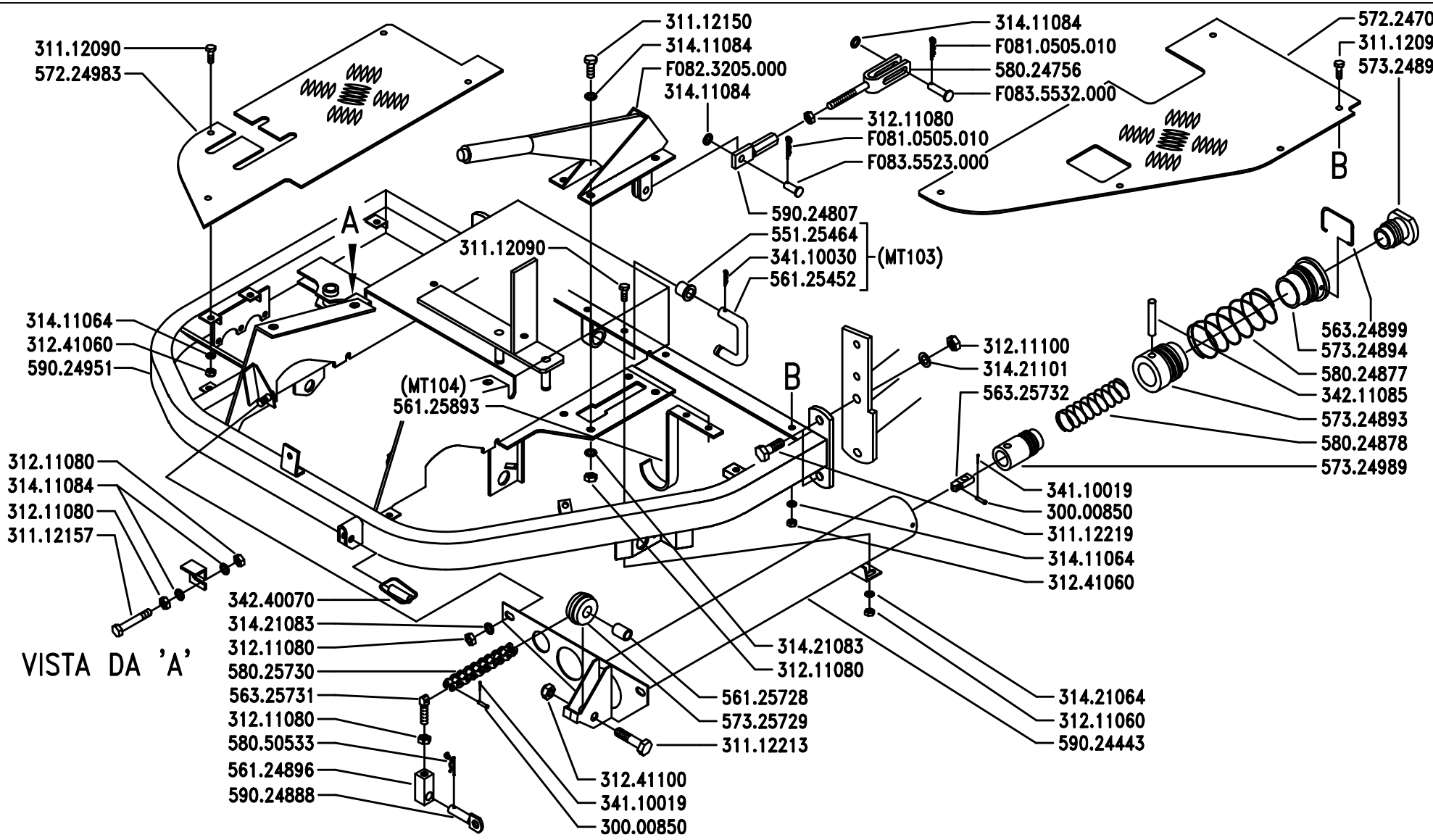

BCS	SERIE MA.TRA	TELAIO ANTERIORE (MT103 – MT104) FRONT FRAME (MT103 – MT104) CHÂSSIS ANTÉRIEUR (MT103 – MT104) CHASIS DELANTERO (MT103 – MT104) VORDERWAGEN (MT103 – MT104)	DALLA MACCHINA DE LA MAQUINA DE LA MACHINE FROM THE MACHINE AB DER MASCHINE N.	Sostituisce I02/0 Sostituye I02/0 Remplace I02/0 Replaces I02/0 Ersätzt I02/0	I02 2/199

Pos.	Code	Q.ty	Description	Notes
57325729	57325729	0	PULLEY	
58024756	58024756	0	ROD	
58024877	58024877	0	SPRING	
58024878	58024878	0	SPRING	
58025730	58025730	0	CHAIN 47MGL	
58050533	58050533	0	PIN	
59024443	59024443	0	CONTAINER	
59024807	59024807	0	REGULATOR	
59024888	59024888	0	PIN	
59024951	59024951	0	FRONT FRAME	
F0810505	F0810505010	0	SPLIT PIN A2,0X201336	
F0823205	F0823205000	0	HANDBRAKE LEVER	
F0835523	F0835523000	0	PIN	
F0835532	F0835532000	0	PIN	

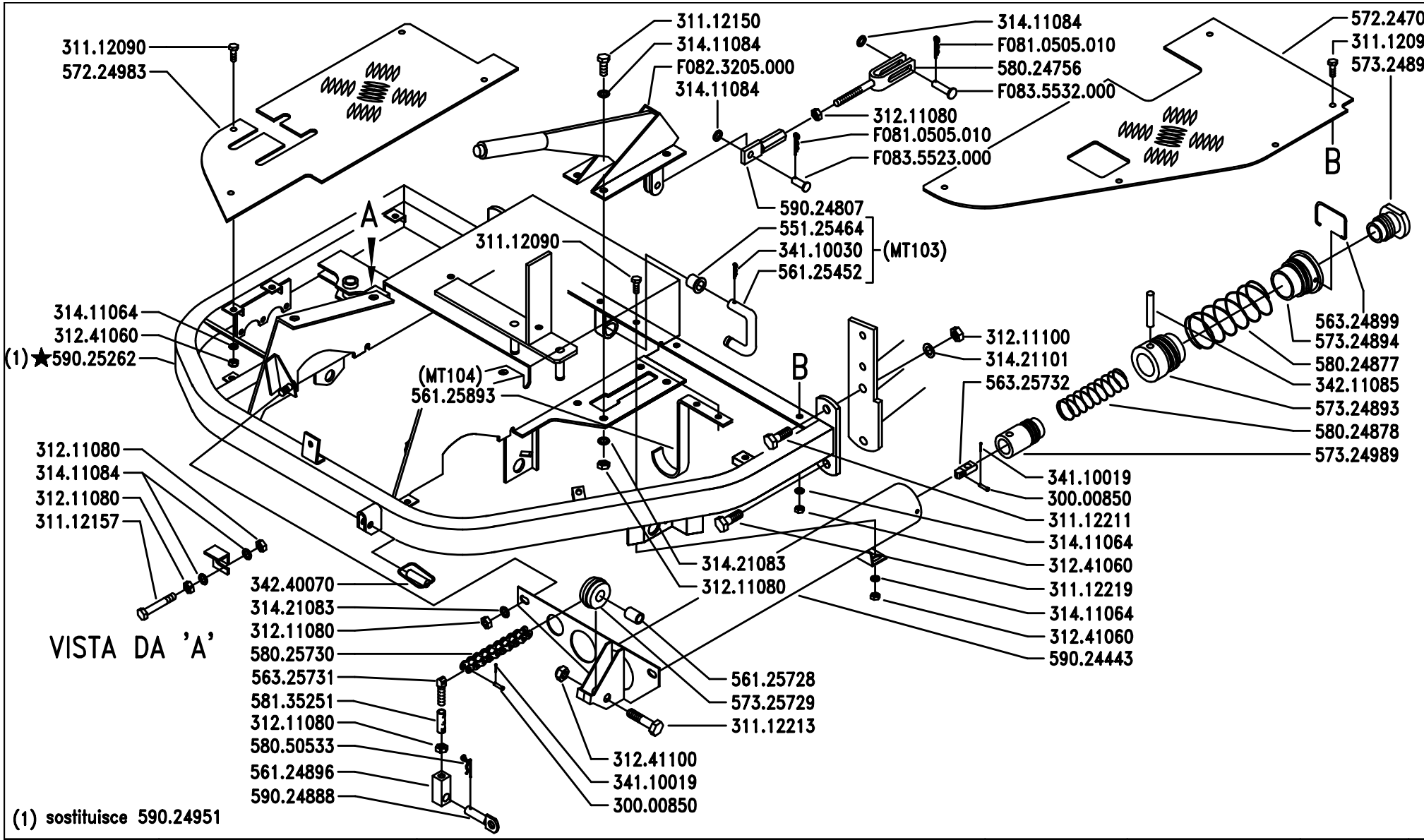

BCS	SERIE MA.TRA	TELAIO ANTERIORE (MT103 – MT104) FRONT FRAME (MT103 – MT104) CHÂSSIS ANTÉRIEUR (MT103 – MT104) CHASIS DELANTERO (MT103 – MT104) VORDERWAGEN (MT103 – MT104)	DALLA MACCHINA DE LA MAQUINA DE LA MACHINE FROM THE MACHINE AB DER MASCHINE ★ N.	AGGIORNAMENTO APLAZAMIENTO MISE A JOUR REVISION ANPASSUNG	I02 3/199

Pos.	Code	Q.ty	Description	Notes
30000850	30000850	0	PIN 3h14	
31112090	31112090	0	SCREW TE M6X16 UNI 5739 8G	
31112150	31112150	0	SCREW TE M8X20 UNI 5739 8G	
31112157	31112157	0	SCREW TE M8X50 UNI 5739 8G	
31112211	31112211	0	SCREW TE M10X30 UNI 5739	
31112213	31112213	0	SCREW TE M10X40 UNI 5739	
31112219	31112219	0	SCREW TE M10X25 UNI 5739	
31211060	31211060	0	HEXAGONAL NUT M8	
31211080	31211080	0	NUT M8	
31211100	31211100	0	NUT M10	
31241060	31241060	0	HEXAGON SELFLOCK NUT M6	
31241100	31241100	0	SELFLOCK HEXAGON NUT M10	
31411064	31411064	0	WASHER 6,4x12,5	
31411084	31411084	0	WASHER 8,4x17	
31421064	31421064	0	WASHER	
31421083	31421083	0	WASHER	
31421101	31421101	0	WASHER	
34110019	34110019	0	SPLIT PIN	
34110030	34110030	0	SPLIT PIN A3X20 UNI 1336	
34211085	34211085	0	ROLL PIN	
34240070	34240070	0	PIN D=7	
55125464	55125464	0	BUSHING	
56124896	56124896	0	SMALL BLOCK	
56125452	56125452	0	U BOLT	
56125728	56125728	0	SLEEVE	
56125893	56125893	0	HOLDER	
56324899	56324899	0	STOP	
56325731	56325731	0	REGISTER	
56325732	56325732	0	CONNECTION	
57224702	57224702	0	LEFT FOOTBOARD	
57224983	57224983	0	RIGHT FOOTBOARD	
57324893	57324893	0	RING NUT	
57324894	57324894	0	RING NUT	
57324895	57324895	0	RING NUT	

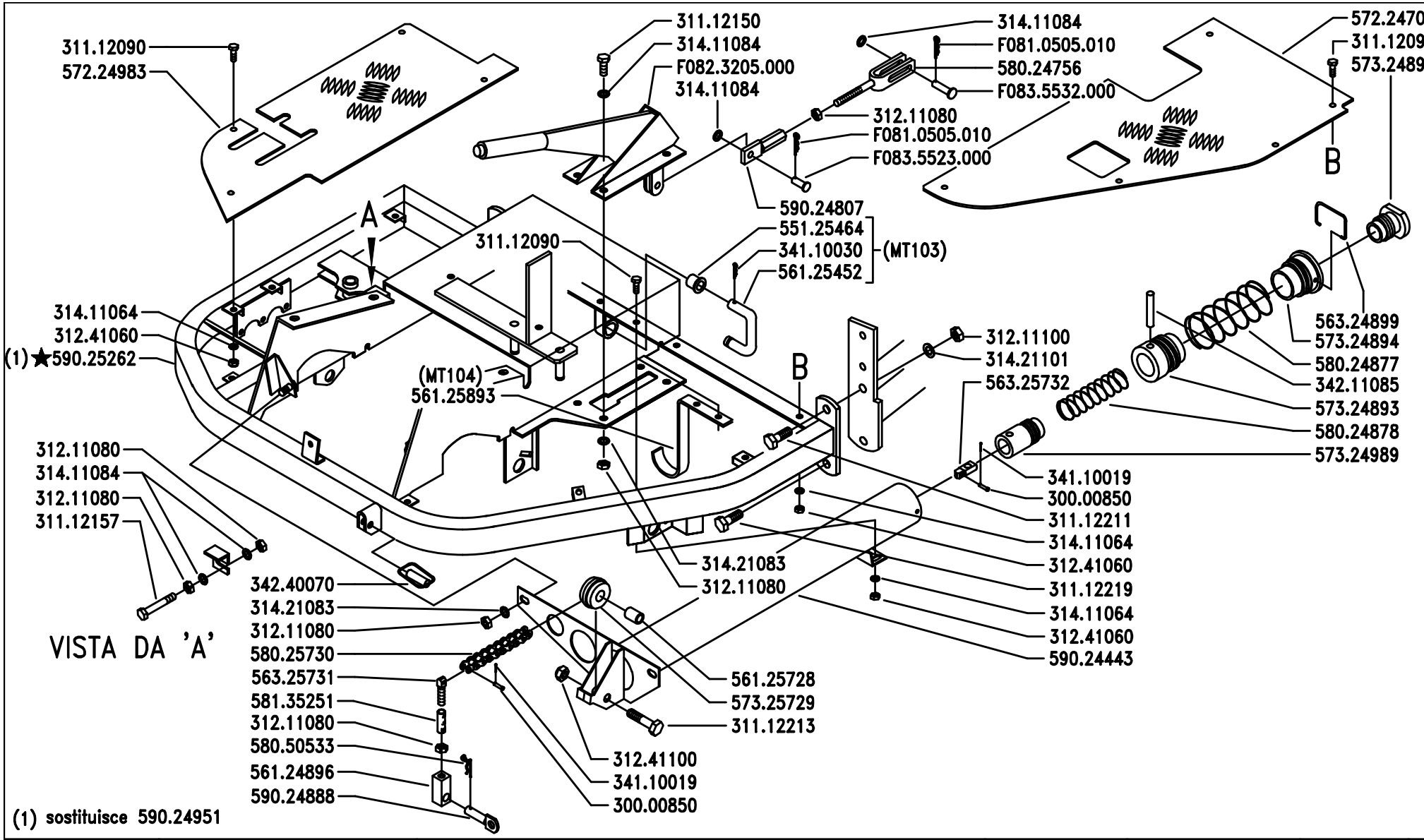

BCS	SERIE MA.TRA	TELAIO ANTERIORE (MT103 – MT104) FRONT FRAME (MT103 – MT104) CHÂSSIS ANTÉRIEUR (MT103 – MT104) CHASIS DELANTERO (MT103 – MT104) VORDERWAGEN (MT103 – MT104)	DALLA MACCHINA DE LA MAQUINA DE LA MACHINE FROM THE MACHINE AB DER MASCHINE ★ N.	AGGIORNAMENTO APLAZAMIENTO MISE A JOUR REVISION ANPASSUNG	I02 3/199

Pos.	Code	Q.ty	Description	Notes
57324989	57324989	0	RING NUT	
57325729	57325729	0	PULLEY	
58024756	58024756	0	ROD	
58024877	58024877	0	SPRING	
58024878	58024878	0	SPRING	
58025730	58025730	0	CHAIN 47MGL	
58050533	58050533	0	PIN	
59024443	59024443	0	CONTAINER	
59024807	59024807	0	REGULATOR	
59024888	59024888	0	PIN	
59025262	59025262	0	FRONT FRAME	
F0810505	F0810505010	0	SPLIT PIN A2,0X201336	
F0823205	F0823205000	0	HANDBRAKE LEVER	
F0835523	F0835523000	0	PIN	
F0835532	F0835532000	0	PIN	

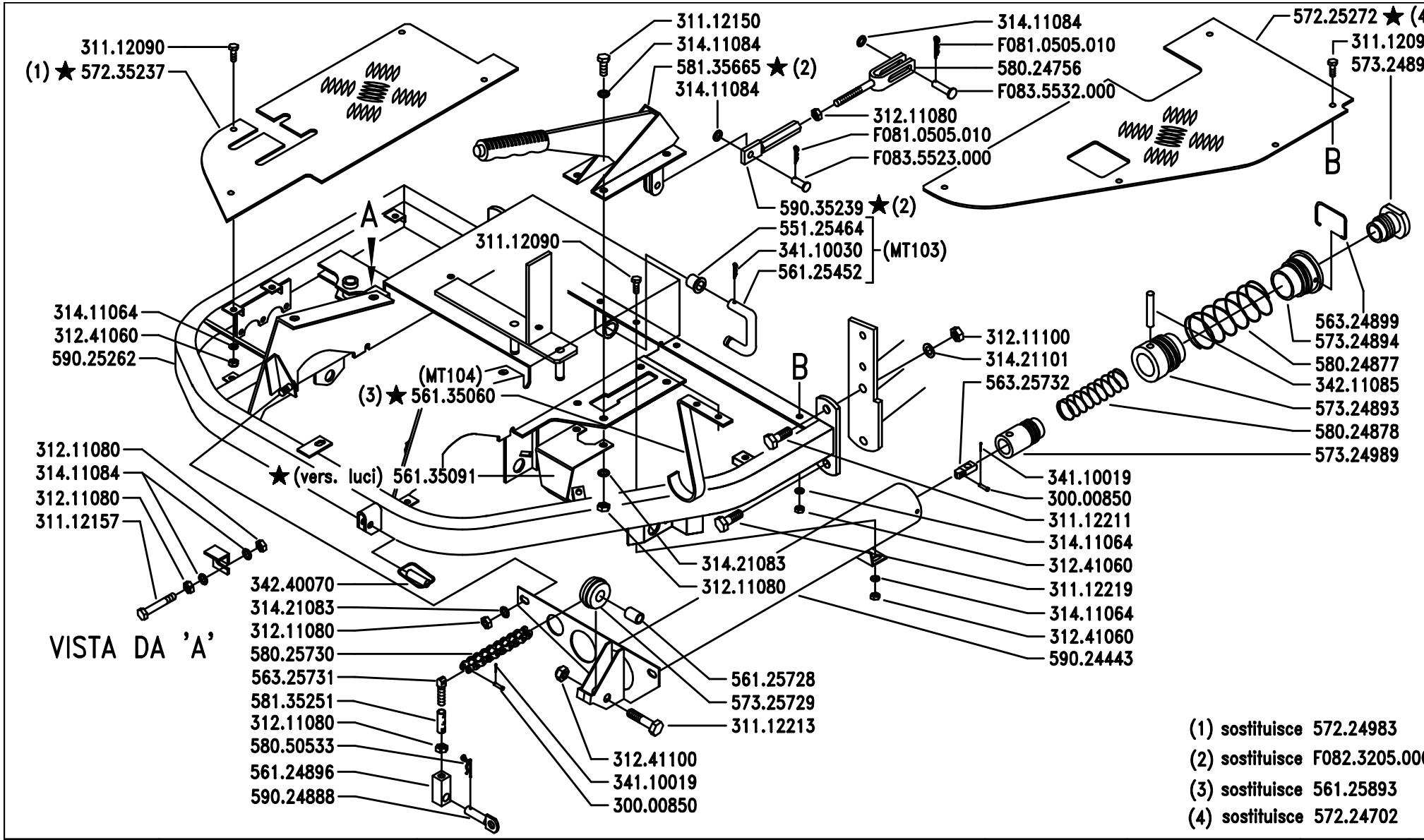

(1) sostituisce 572.24983
(2) sostituisce F082.3205.00
(3) sostituisce 561.25893
(4) sostituisce 572.24702

BCS

SERIE
MA.TRA

TELAIO ANTERIORE (MT103 – MT104 – MT205)

FRONT FRAME
(MT103 – MT104 – MT205)

CHÂSSIS ANTÉRIEUR
(MT103 – MT104 – MT205)

CHASIS DELANTERO
(MT103 – MT104 – MT205)

VORDERWAGEN
(MT103 – MT104 – MT205)

DALLA MACCHINA
DE LA MAQUINA
DE LA MACHINE
FROM THE MACHINE
AB DER MASCHINE

★ N.

(2) 1426
(1) 1195

I02

10/200

Pos.	Code	Q.ty	Description	Notes
30000850	30000850	0	PIN 3h14	
31112090	31112090	0	SCREW TE M6X16 UNI 5739 8G	
31112150	31112150	0	SCREW TE M8X20 UNI 5739 8G	
31112157	31112157	0	SCREW TE M8X50 UNI 5739 8G	
31112211	31112211	0	SCREW TE M10X30 UNI 5739	
31112213	31112213	0	SCREW TE M10X40 UNI 5739	
31112219	31112219	0	SCREW TE M10X25 UNI 5739	
31211080	31211080	0	NUT M8	
31211100	31211100	0	NUT M10	
31241060	31241060	0	HEXAGON SELFLOCK NUT M6	
31241100	31241100	0	SELFLOCK HEXAGON NUT M10	
31411064	31411064	0	WASHER 6,4x12,5	
31411084	31411084	0	WASHER 8,4x17	
31421083	31421083	0	WASHER	
31421101	31421101	0	WASHER	
34110019	34110019	0	SPLIT PIN	
34110030	34110030	0	SPLIT PIN A3X20 UNI 1336	
34211085	34211085	0	ROLL PIN	
34240070	34240070	0	PIN D=7	
55125464	55125464	0	BUSHING	
56124896	56124896	0	SMALL BLOCK	
56125452	56125452	0	U BOLT	
56125728	56125728	0	SLEEVE	
56135060	56135060	0	HOLDER	
56135091	56135091	0	SUPPORT	
56324899	56324899	0	STOP	
56325731	56325731	0	REGISTER	
56325732	56325732	0	CONNECTION	
57225272	57225272	0	LEFT FOOTBOARD	
57235237	57235237	0	RIGHT FOOTBOARD	
57324893	57324893	0	RING NUT	
57324894	57324894	0	RING NUT	
57324895	57324895	0	RING NUT	
57324989	57324989	0	RING NUT	

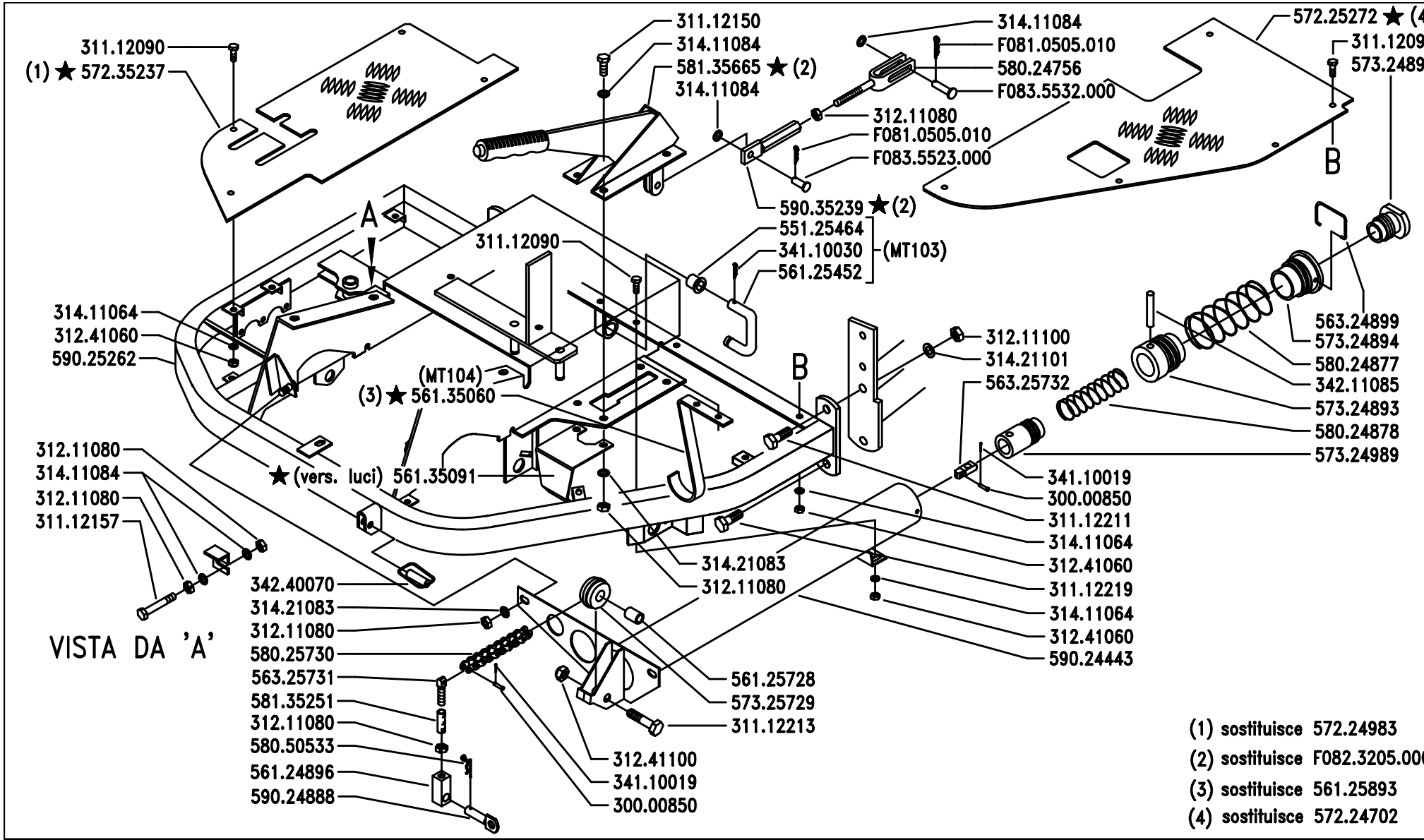

(1) sostituisce 572.24983
(2) sostituisce F082.3205.00
(3) sostituisce 561.25893
(4) sostituisce 572.24702

BCS

SERIE

MA.TRA

TELAIO ANTERIORE (MT103 – MT104 – MT205)

FRONT FRAME
(MT103 – MT104 – MT205)

CHÂSSIS ANTÉRIEUR
(MT103 – MT104 – MT205)

CHASIS DELANTERO
(MT103 – MT104 – MT205)

VORDERWAGEN
(MT103 – MT104 – MT205)

DALLA MACCHINA
DE LA MAQUINA
DE LA MACHINE
FROM THE MACHINE
AB DER MASCHINE

★ N.

(2) 1426
(1) 1195

I02

10/200

Pos.	Code	Q.ty	Description	Notes
57325729	57325729	0	PULLEY	
58024756	58024756	0	ROD	
58024877	58024877	0	SPRING	
58024878	58024878	0	SPRING	
58025730	58025730	0	CHAIN 47MGL	
58050533	58050533	0	PIN	
58135251	58135251	0	SLEEVE	
58135665	58135665	0	BRAKE LEVER	
59024443	59024443	0	CONTAINER	
59024888	59024888	0	PIN	
59025262	59025262	0	FRONT FRAME	
59035239	59035239	0	REGULATOR	
F0810505	F0810505010	0	SPLIT PIN A2,0X201336	
F0835523	F0835523000	0	PIN	
F0835532	F0835532000	0	PIN	

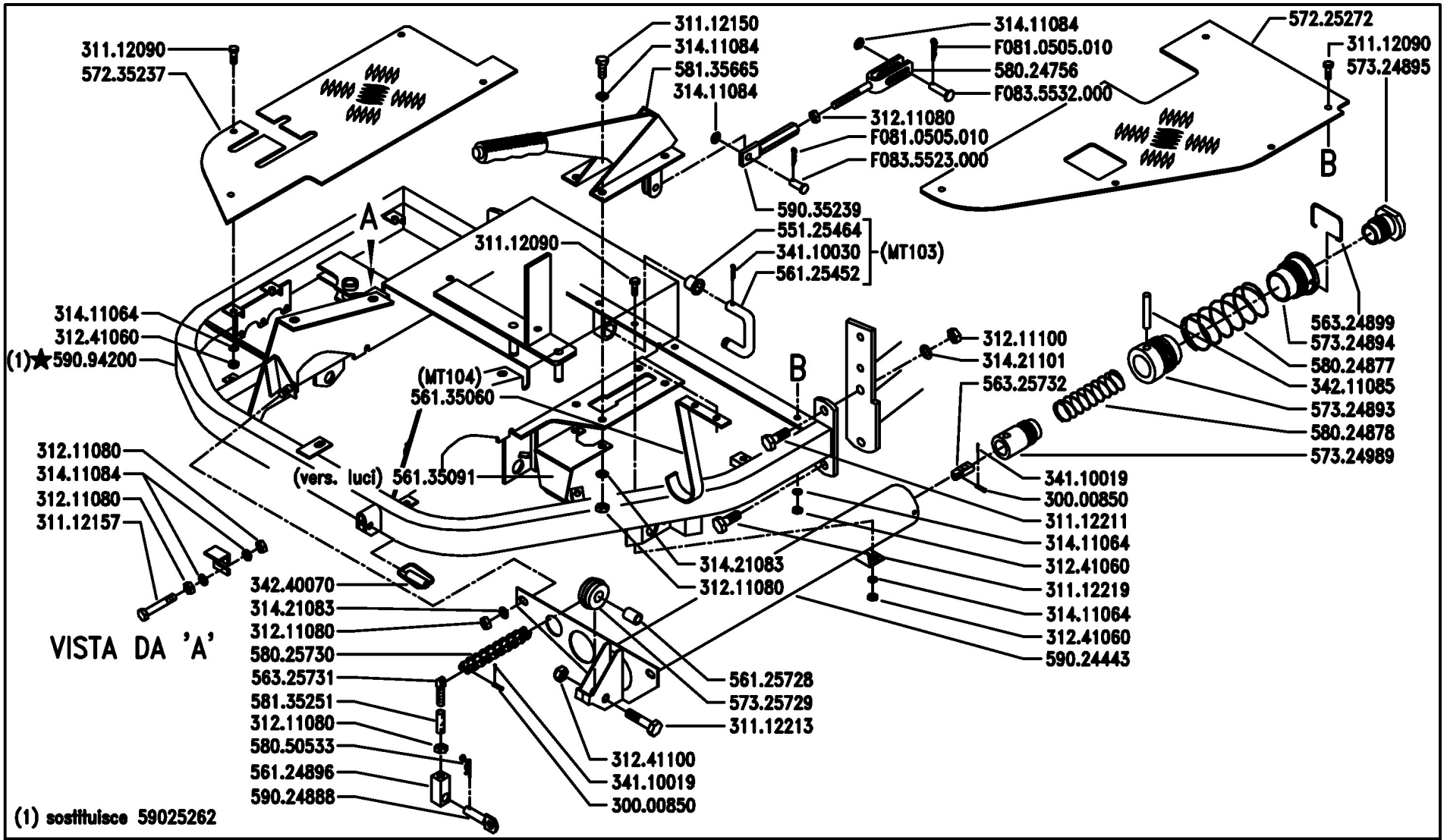

BCS	SERIE MA.TRA	TELAIO ANTERIORE (MT103 - MT104 - MT205) FRONT FRAME (MT103 - MT104 - MT205) CHASIS DELANTERO (MT103 - MT104 - MT205) CHÂSSIS ANTÉRIEUR (MT103 - MT104 - MT205) VORDERWAGEN (MT103 - MT104 - MT205)	DALLA MACCHINA DE LA MAQUINA DE LA MACHINE FROM THE MACHINE AB DER MASCHINE ★ N.	AGGIORNAMENTO APLAZAMIENTO MISE A JOUR REVISION ANPASSUNG	I02	Rev. 4
					03/2006	

DITE - BCS 32102TDAR

Pos.	Code	Q.ty	Description	Notes
30000850	30000850	1	PIN 3h14	
31112090	31112090	1	SCREW TE M6X16 UNI 5739 8G	
31112150	31112150	1	SCREW TE M8X20 UNI 5739 8G	
31112157	31112157	1	SCREW TE M8X50 UNI 5739 8G	
31112211	31112211	1	SCREW TE M10X30 UNI 5739	
31112213	31112213	1	SCREW TE M10X40 UNI 5739	
31112219	31112219	1	SCREW TE M10X25 UNI 5739	
31211080	31211080	1	NUT M8	
31211100	31211100	1	NUT M10	
31241060	31241060	1	HEXAGON SELFLOCK NUT M6	
31241100	31241100	1	SELFLOCK HEXAGON NUT M10	
31411064	31411064	1	WASHER 6,4x12,5	
31411084	31411084	1	WASHER 8,4x17	
31421083	31421083	1	WASHER	
31421101	31421101	1	WASHER	
34110019	34110019	1	SPLIT PIN	
34110030	34110030	1	SPLIT PIN A3X20 UNI 1336	
34211085	34211085	1	ROLL PIN	
34240070	34240070	1	PIN D=7	
55125464	55125464	1	BUSHING	
56124896	56124896	1	SMALL BLOCK	
56125452	56125452	1	U BOLT	
56125728	56125728	1	SLEEVE	
56135060	56135060	1	HOLDER	
56135091	56135091	1	SUPPORT	
56324899	56324899	1	STOP	
56325731	56325731	1	REGISTER	
56325732	56325732	1	CONNECTION	
57225272	57225272	1	LEFT FOOTBOARD	
57235237	57235237	1	RIGHT FOOTBOARD	
57324893	57324893	1	RING NUT	
57324894	57324894	1	RING NUT	
57324895	57324895	1	RING NUT	
57324989	57324989	1	RING NUT	

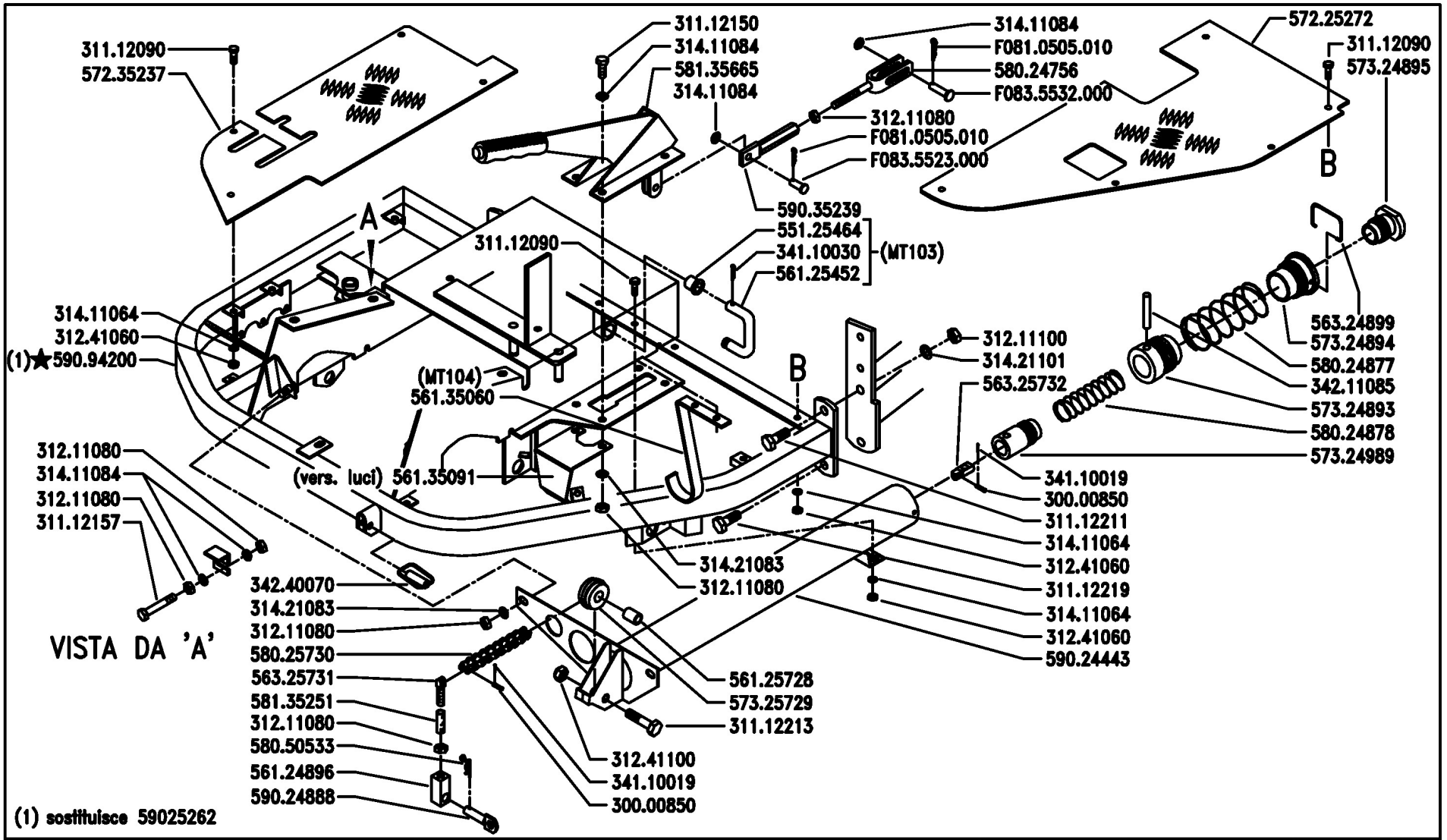

BCS	SERIE MA.TRA	TELAIO ANTERIORE (MT103 - MT104 - MT205) FRONT FRAME (MT103 - MT104 - MT205) CHASIS DELANTERO (MT103 - MT104 - MT205) CHÂSSIS ANTÉRIEUR (MT103 - MT104 - MT205) VORDERWAGEN (MT103 - MT104 - MT205)	DALLA MACCHINA DE LA MAQUINA DE LA MACHINE FROM THE MACHINE AB DER MASCHINE ★ N.	AGGIORNAMENTO APLAZAMIENTO MISE A JOUR REVISION ANPASSUNG	I02 03/2006	Rev. 4

DITE - BCS 32102TDAR

Pos.	Code	Q.ty	Description	Notes
57325729	57325729	1	PULLEY	
58024756	58024756	1	ROD	
58024877	58024877	1	SPRING	
58024878	58024878	1	SPRING	
58025730	58025730	1	CHAIN 47MGL	
58050533	58050533	1	PIN	
58135251	58135251	1	SLEEVE	
58135665	58135665	1	BRAKE LEVER	
59024443	59024443	1	CONTAINER	
59024888	59024888	1	PIN	
59035239	59035239	1	REGULATOR	
59094200	59094200	1	FRONT FRAME	
F0810505	F0810505010	1	SPLIT PIN A2,0X201336	
F0835523	F0835523000	1	PIN	
F0835532	F0835532000	1	PIN	

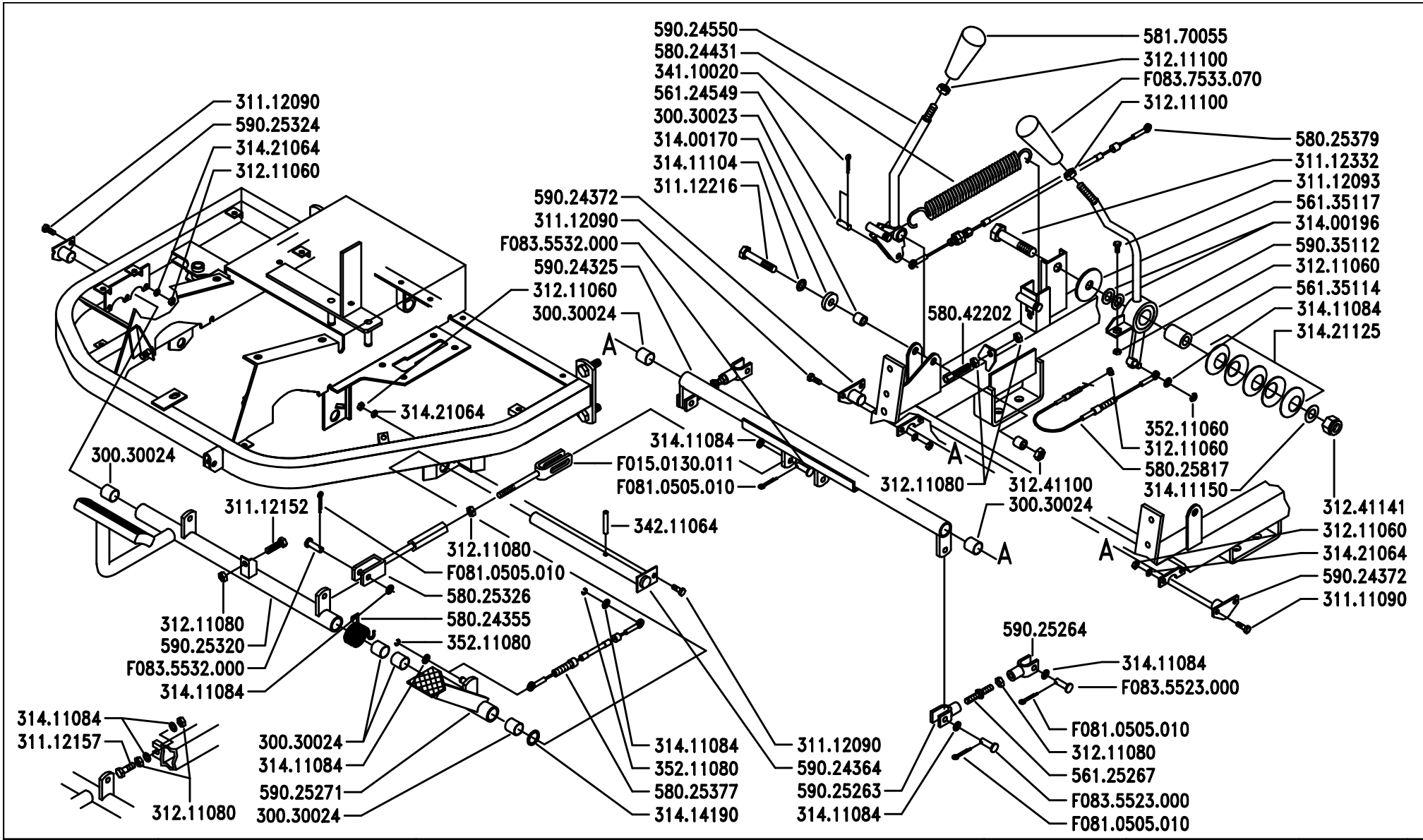

BCS	SERIE MA.TRA	COMANDI (MT103 – MT104) SYSTEM CONTROLS (MT103 – MT104) COMMANDES (MT103 – MT104) MANDOS (MT103 – MT104) STEUERN (MT103 – MT104)	DALLA MACCHINA DE LA MAQUINA DE LA MACHINE FROM THE MACHINE AB DER MASCHINE N.	Sostituisce I04/0 Sostituye I04/0 Remplace I04/0 Replaces I04/0 Ersätzt I04/0	I04 2/199

Pos.	Code	Q.ty	Description	Notes
30030023	30030023	0	BUSHING 10X15X15	
30030024	30030024	0	BUSHING 18X20X15	
31111090	31111090	0	SCREW TE M5X10 UNI 5739 8G	
31112090	31112090	0	SCREW TE M6X16 UNI 5739 8G	
31112093	31112093	0	SCREW TE M6X20	
31112152	31112152	0	SCREW TE M8X30 UNI 5739 8G	
31112157	31112157	0	SCREW TE M8X50 UNI 5739 8G	
31112216	31112216	0	SCREW TE M10X65 UNI 5737	
31112332	31112332	0	SCREW TE M14X70 UNI 5737	
31211060	31211060	0	HEXAGONAL NUT M8	
31211080	31211080	0	NUT M8	
31211100	31211100	0	NUT M10	
31241100	31241100	0	SELFLOCK HEXAGON NUT M10	
31241141	31241141	0	SELFLOCK NUT M14 6S	
31400170	31400170	0	WASHER 10,5x28/6	
31400196	31400196	0	SHIM PS 14x20/0,2	
31411084	31411084	0	WASHER 8,4x17	
31411104	31411104	0	WASHER 10,5x18	
31411150	31411150	0	WASHER 15x28	
31414190	31414190	0	WASHER 19	
31421064	31421064	0	WASHER	
31421125	31421125	0	CUP SPRING 50X25,4X1,5 DIN 2093	
34110020	34110020	0	SPLIT PIN A2X12 UNI 1336	
34211064	34211064	0	ROLL PIN	
35211060	35211060	0	SEEGER RING E 6 UNI 7434	
35211080	35211080	0	SEEGER RING E 8 UNI 7434	
56124549	56124549	0	PIN	
56125267	56125267	0	STUD BOLT	
56135114	56135114	0	PIPE	
56135117	56135117	0	SPACER	
58024355	58024355	0	SPRING	
58024431	58024431	0	SPRING	
58025326	58025326	0	ROD	
58025377	58025377	0	COMPLETE TRANSMISSION	

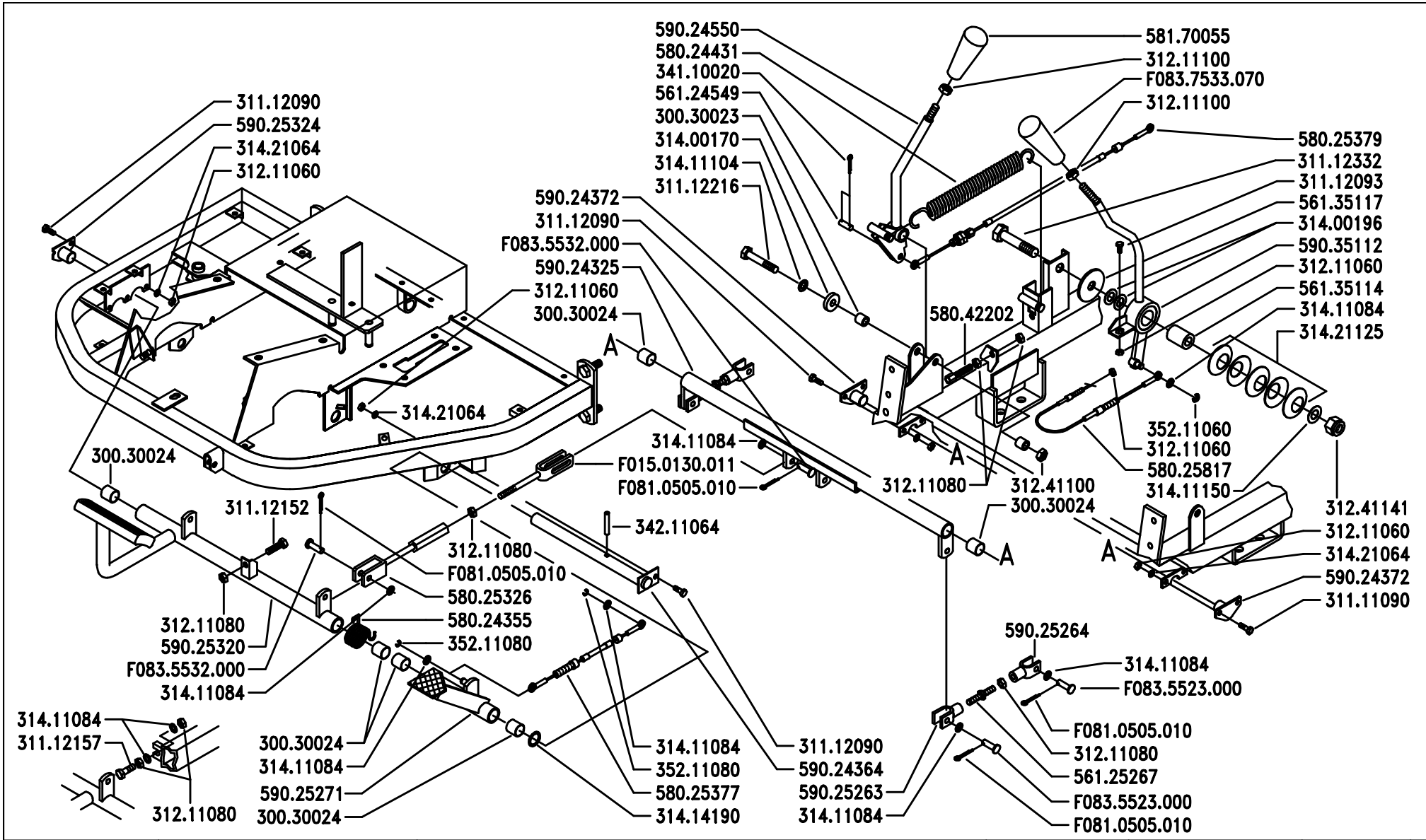

BCS	SERIE MA.TRA	COMANDI (MT103 – MT104) SYSTEM CONTROLS (MT103 – MT104) COMMANDES (MT103 – MT104) MANDOS (MT103 – MT104) STEUERN (MT103 – MT104)	DALLA MACCHINA DE LA MAQUINA DE LA MACHINE FROM THE MACHINE AB DER MASCHINE N.	Sostituisce I04/0 Sostituye I04/0 Remplace I04/0 Replaces I04/0 Ersätzt I04/0	I04 2/199

Pos.	Code	Q.ty	Description	Notes
58025379	58025379	0	TRANSMISSION	
58025817	58025817	0	ACCELERATOR CABLE (L=1930)	
58042202	58042202	0	ADJUSTING SCREW M8	
58170055	58170055	0	HANDLE	
59024325	59024325	0	PIPE	
59024364	59024364	0	PEDAL PIN	
59024372	59024372	0	CONNECTION	
59024550	59024550	0	PTO LEVER	
59025263	59025263	0	REGISTER	
59025264	59025264	0	REGISTER	
59025271	59025271	0	PEDAL	
59025320	59025320	0	BRAKE PEDAL	
59025324	59025324	0	CONNECTION	
59035112	59035112	0	COMMAND LEVER	
F0150130	F0150130011	0	ROD	
F0810505	F0810505010	0	SPLIT PIN A2,0X201336	
F0835523	F0835523000	0	PIN	
F0835532	F0835532000	0	PIN	
F0837533	F0837533070	0	GRIP	

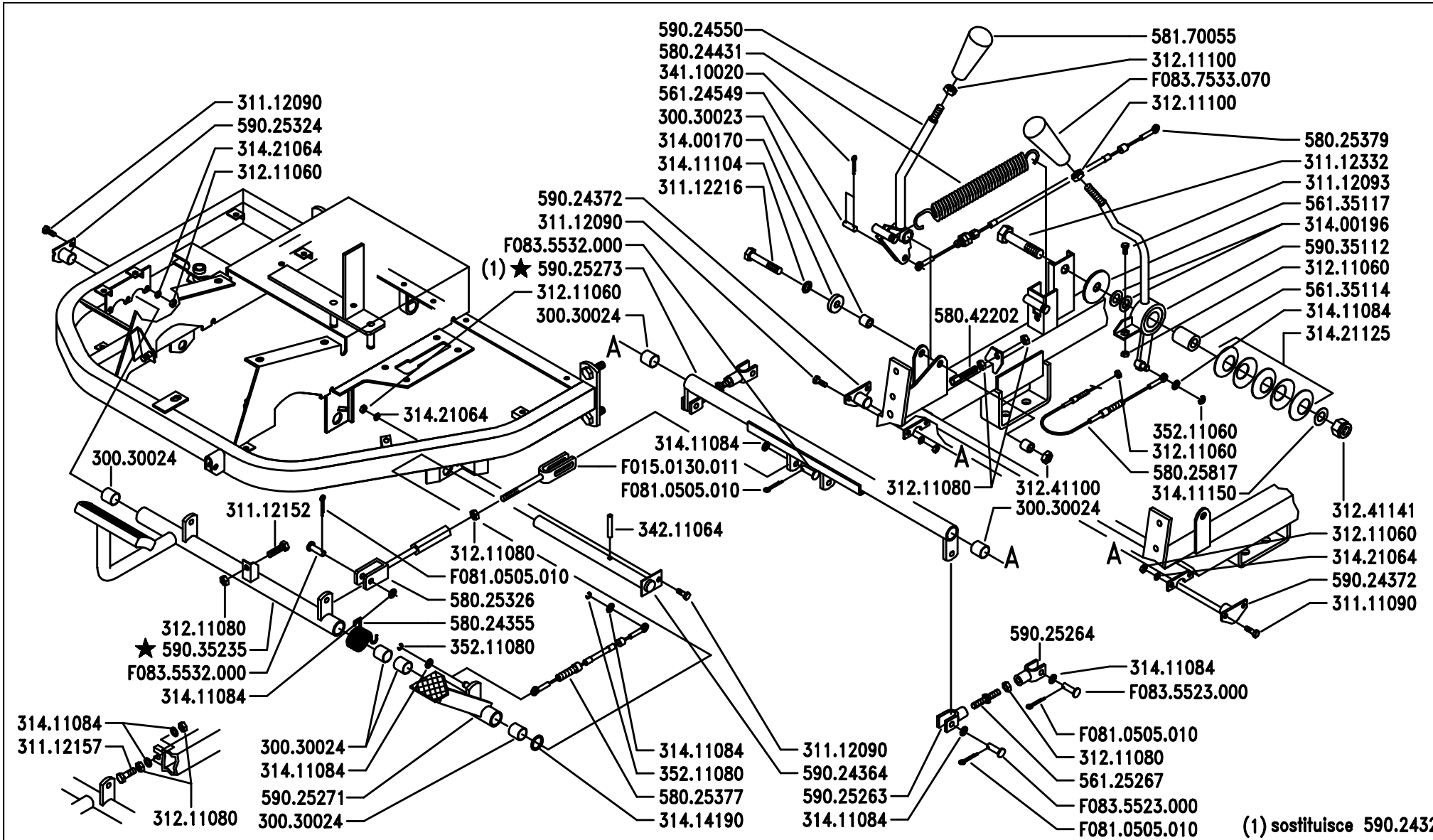

(1) sostituisce 590.2432

BCS

SERIE

MA.TRA

COMANDI (MT103 – MT104)

SYSTEM CONTROLS (MT103 – MT104)

COMMANDES (MT103 – MT104)

MANDOS (MT103 – MT104)

STEUERN (MT103 – MT104)

DALLA MACCHINA
DE LA MAQUINA
DE LA MACHINE
FROM THE MACHINE
AB DER MASCHINE

★ N. 1151

I04

5/199

Pos.	Code	Q.ty	Description	Notes
30030023	30030023	0	BUSHING 10X15X15	
30030024	30030024	0	BUSHING 18X20X15	
31111090	31111090	0	SCREW TE M5X10 UNI 5739 8G	
31112090	31112090	0	SCREW TE M6X16 UNI 5739 8G	
31112093	31112093	0	SCREW TE M6X20	
31112152	31112152	0	SCREW TE M8X30 UNI 5739 8G	
31112157	31112157	0	SCREW TE M8X50 UNI 5739 8G	
31112216	31112216	0	SCREW TE M10X65 UNI 5737	
31112332	31112332	0	SCREW TE M14X70 UNI 5737	
31211060	31211060	0	HEXAGONAL NUT M8	
31211080	31211080	0	NUT M8	
31211100	31211100	0	NUT M10	
31241100	31241100	0	SELFLOCK HEXAGON NUT M10	
31241141	31241141	0	SELFLOCK NUT M14 6S	
31400170	31400170	0	WASHER 10,5x28/6	
31400196	31400196	0	SHIM PS 14x20/0,2	
31411084	31411084	0	WASHER 8,4x17	
31411104	31411104	0	WASHER 10,5x18	
31411150	31411150	0	WASHER 15x28	
31414190	31414190	0	WASHER 19	
31421064	31421064	0	WASHER	
31421125	31421125	0	CUP SPRING 50X25,4X1,5 DIN 2093	
34110020	34110020	0	SPLIT PIN A2X12 UNI 1336	
34211064	34211064	0	ROLL PIN	
35211060	35211060	0	SEEGER RING E 6 UNI 7434	
35211080	35211080	0	SEEGER RING E 8 UNI 7434	
56124549	56124549	0	PIN	
56125267	56125267	0	STUD BOLT	
56135114	56135114	0	PIPE	
56135117	56135117	0	SPACER	
58024355	58024355	0	SPRING	
58024431	58024431	0	SPRING	
58025326	58025326	0	ROD	
58025377	58025377	0	COMPLETE TRANSMISSION	

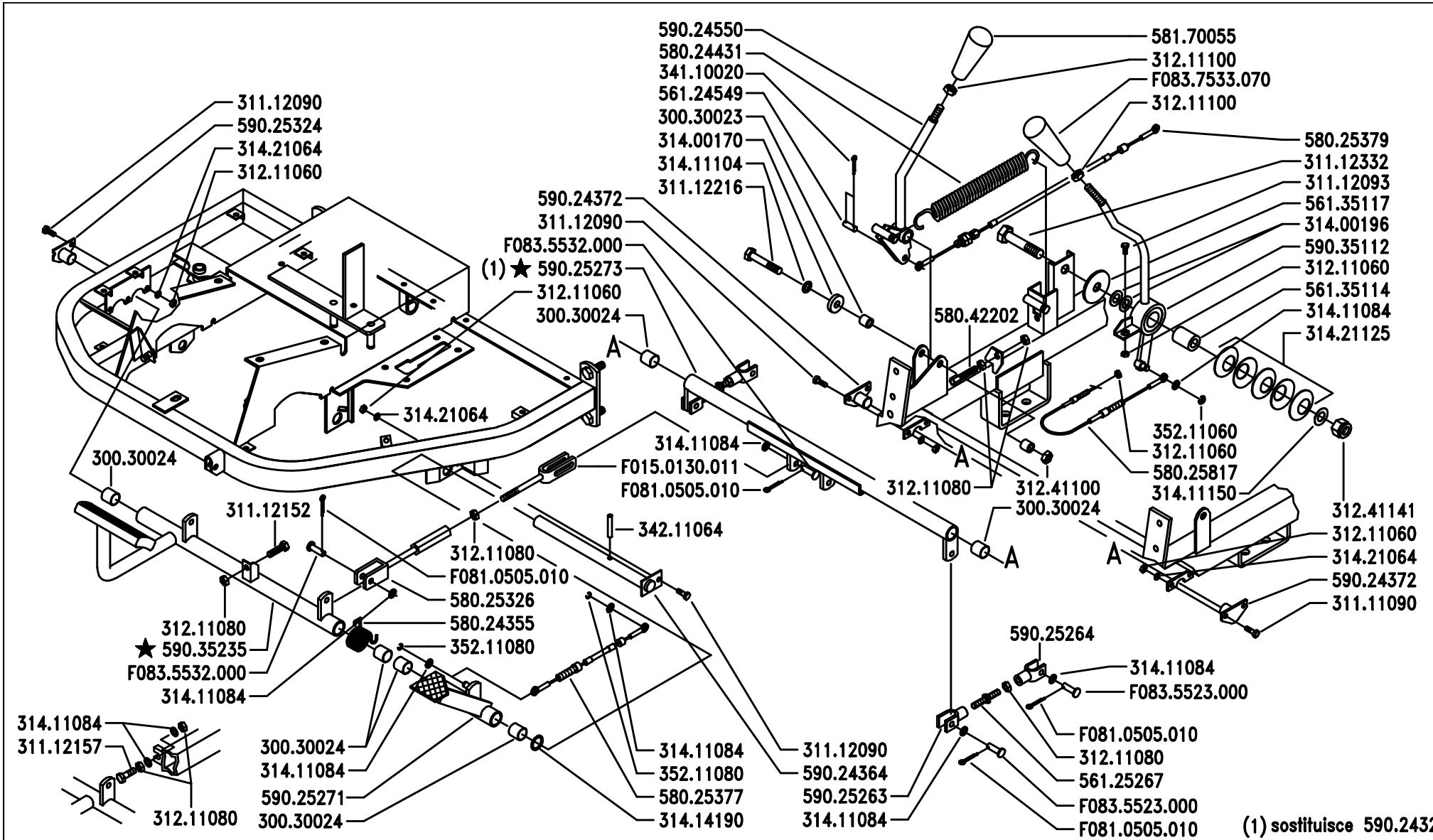

BCS

SERIE

MA.TRA

COMANDI (MT103 – MT104)

SYSTEM CONTROLS (MT103 – MT104)

COMMANDES (MT103 – MT104)

MANDOS (MT103 – MT104)

STEUERN (MT103 – MT104)

DALLA MACCHINA
DE LA MAQUINA
DE LA MACHINE
FROM THE MACHINE
AB DER MASCHINE

★ N. 1151

I04

5/199

Pos.	Code	Q.ty	Description	Notes
58025379	58025379	0	TRANSMISSION	
58025817	58025817	0	ACCELERATOR CABLE (L=1930)	
58042202	58042202	0	ADJUSTING SCREW M8	
58170055	58170055	0	HANDLE	
59024364	59024364	0	PEDAL PIN	
59024372	59024372	0	CONNECTION	
59024550	59024550	0	PTO LEVER	
59025263	59025263	0	REGISTER	
59025264	59025264	0	REGISTER	
59025271	59025271	0	PEDAL	
59025273	59025273	0	PIPE	
59025324	59025324	0	CONNECTION	
59035112	59035112	0	COMMAND LEVER	
59035235	59035235	0	BRAKE PEDAL	
F0150130	F0150130011	0	ROD	
F0810505	F0810505010	0	SPLIT PIN A2,0X201336	
F0835523	F0835523000	0	PIN	
F0835532	F0835532000	0	PIN	
F0837533	F0837533070	0	GRIP	

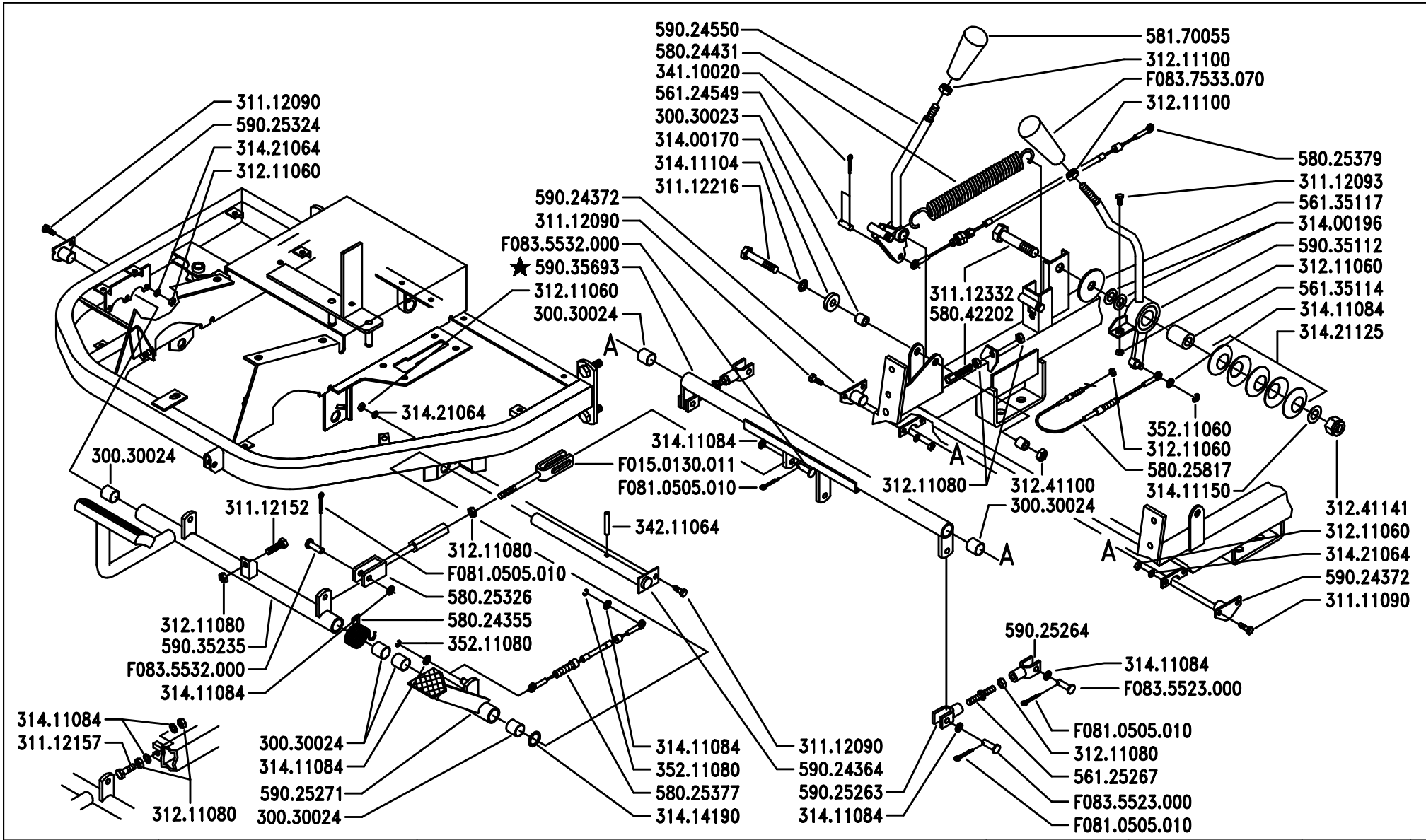

BCS

SERIE

MA.TRA

COMANDI (MT103 – MT104 – MT205)

SYSTEM CONTROLS (MT103 – MT104 – MT205)

COMMANDES (MT103 – MT104 – MT205)

MANDOS (MT103 – MT104 – MT205)

STEUERN (MT103 – MT104 – MT205)

DALLA MACCHINA
DE LA MAQUINA
DE LA MACHINE
FROM THE MACHINE
AB DER MASCHINE

★ N. 1528

I04

4/200

Pos.	Code	Q.ty	Description	Notes
30030023	30030023	0	BUSHING 10X15X15	
30030024	30030024	0	BUSHING 18X20X15	
31111090	31111090	0	SCREW TE M5X10 UNI 5739 8G	
31112090	31112090	0	SCREW TE M6X16 UNI 5739 8G	
31112093	31112093	0	SCREW TE M6X20	
31112152	31112152	0	SCREW TE M8X30 UNI 5739 8G	
31112157	31112157	0	SCREW TE M8X50 UNI 5739 8G	
31112216	31112216	0	SCREW TE M10X65 UNI 5737	
31112332	31112332	0	SCREW TE M14X70 UNI 5737	
31211060	31211060	0	HEXAGONAL NUT M8	
31211080	31211080	0	NUT M8	
31211100	31211100	0	NUT M10	
31241100	31241100	0	SELFLOCK HEXAGON NUT M10	
31241141	31241141	0	SELFLOCK NUT M14 6S	
31400170	31400170	0	WASHER 10,5x28/6	
31400196	31400196	0	SHIM PS 14x20/0,2	
31411084	31411084	0	WASHER 8,4x17	
31411104	31411104	0	WASHER 10,5x18	
31411150	31411150	0	WASHER 15x28	
31414190	31414190	0	WASHER 19	
31421064	31421064	0	WASHER	
31421125	31421125	0	CUP SPRING 50X25,4X1,5 DIN 2093	
34110020	34110020	0	SPLIT PIN A2X12 UNI 1336	
34211064	34211064	0	ROLL PIN	
35211060	35211060	0	SEEGER RING E 6 UNI 7434	
35211080	35211080	0	SEEGER RING E 8 UNI 7434	
56124549	56124549	0	PIN	
56125267	56125267	0	STUD BOLT	
56135114	56135114	0	PIPE	
56135117	56135117	0	SPACER	
58024355	58024355	0	SPRING	
58024431	58024431	0	SPRING	
58025326	58025326	0	ROD	
58025377	58025377	0	COMPLETE TRANSMISSION	

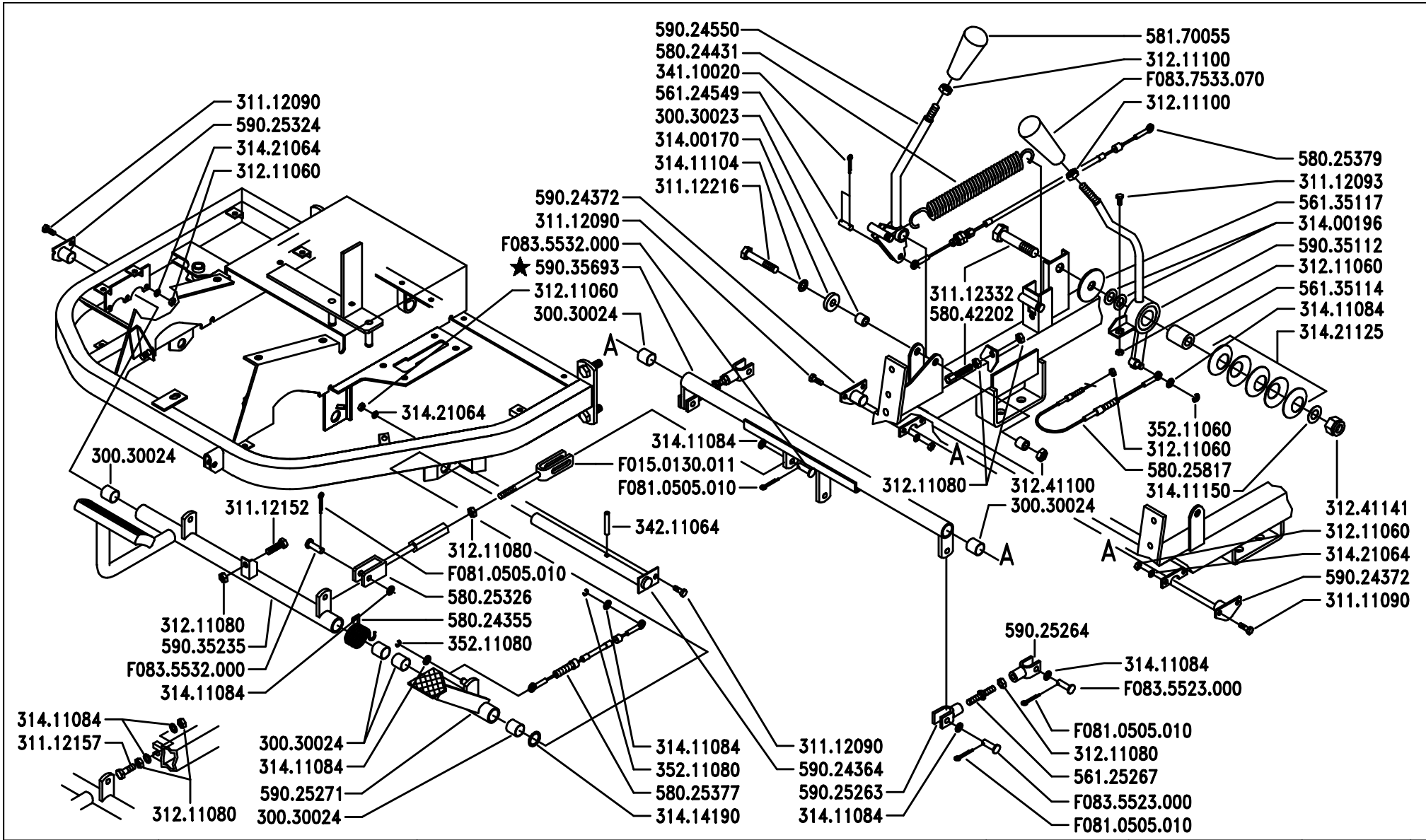

BCS

SERIE

MA.TRA

COMANDI (MT103 – MT104 – MT205)

SYSTEM CONTROLS (MT103 – MT104 – MT205)

COMMANDES (MT103 – MT104 – MT205)

MANDOS (MT103 – MT104 – MT205)

STEUERN (MT103 – MT104 – MT205)

DALLA MACCHINA
DE LA MAQUINA
DE LA MACHINE
FROM THE MACHINE
AB DER MASCHINE

★ N. 1528

I04

4/200

Pos.	Code	Q.ty	Description	Notes
58025379	58025379	0	TRANSMISSION	
58025817	58025817	0	ACCELERATOR CABLE (L=1930)	
58042202	58042202	0	ADJUSTING SCREW M8	
58170055	58170055	0	HANDLE	
59024364	59024364	0	PEDAL PIN	
59024372	59024372	0	CONNECTION	
59024550	59024550	0	PTO LEVER	
59025263	59025263	0	REGISTER	
59025264	59025264	0	REGISTER	
59025271	59025271	0	PEDAL	
59025324	59025324	0	CONNECTION	
59035112	59035112	0	COMMAND LEVER	
59035235	59035235	0	BRAKE PEDAL	
59035693	59035693	0	PIPE	
F0150130	F0150130011	0	ROD	
F0810505	F0810505010	0	SPLIT PIN A2,0X201336	
F0835523	F0835523000	0	PIN	
F0835532	F0835532000	0	PIN	
F0837533	F0837533070	0	GRIP	

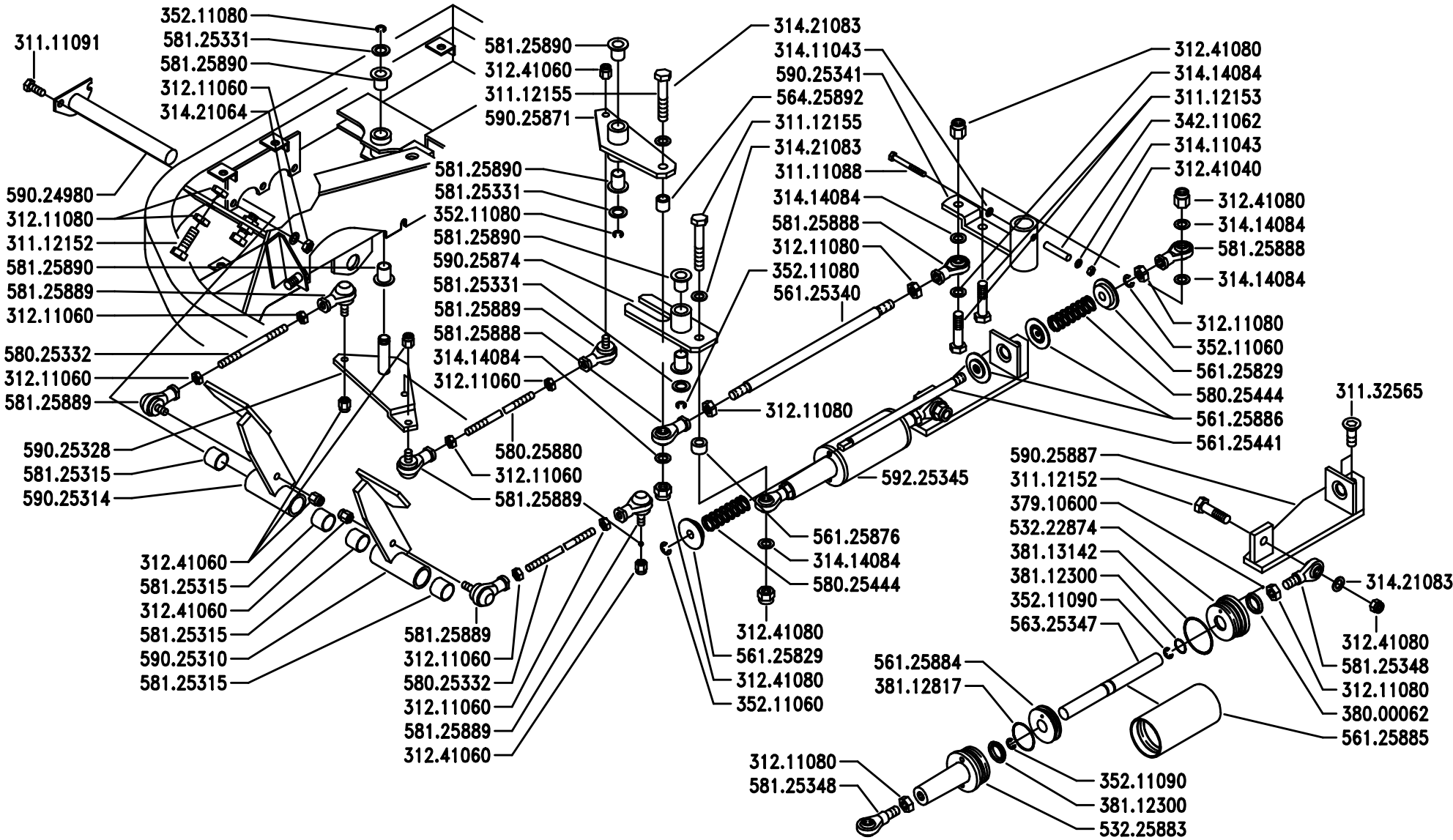

BCS

SERIE

MA.TRA

COMANDI (MT103 – MT104)

SYSTEM CONTROLS (MT103 – MT104)

COMMANDES (MT103 – MT104)

MANDOS (MT103 – MT104)

STEUERN (MT103 – MT104)

DALLA MACCHINA
DE LA MAQUINA
DE LA MACHINE
FROM THE MACHINE
AB DER MASCHINE

N.

Sostituisce	I05/0
Sostituye	I05/0
Remplace	I05/0
Replaces	I05/0
Ersätzt	I05/0

I05

2/199

Pos.	Code	Q.ty	Description	Notes
31111088	31111088	0	SCREW TE M4X40 UNI 5737 8G	
31111091	31111091	0	SCREW E M6X14 UNI 5739 8G	
31112152	31112152	0	SCREW TE M8X30 UNI 5739 8G	
31112153	31112153	0	SCREW TE M8X35 UNI 5739 8G	
31112155	31112155	0	SCREW TE M8X45 UNI 5739 8G	
31132565	31132565	0	SCREW TSVEI M8x16 UNI 5933	
31211060	31211060	0	HEXAGONAL NUT M8	
31211080	31211080	0	NUT M8	
31241040	31241040	0	SELFLOCK NUT M4	
31241060	31241060	0	HEXAGON SELFLOCK NUT M6	
31241080	31241080	0	HEXAGON SELFLOCK NUT M8	
31411043	31411043	0	WASHER 4,3X9	
31414084	31414084	0	WASHER 8,4	
31421064	31421064	0	WASHER	
31421083	31421083	0	WASHER	
34211062	34211062	0	ROLL PIN	
35211060	35211060	0	SEEGER RING E 6 UNI 7434	
35211080	35211080	0	SEEGER RING E 8 UNI 7434	
35211090	35211090	0	SEEGER RING E 9 UNI 7434	
37910600	37910600	0	SFERA 3/32 GRADO C	
38000062	38000062	0	GASKET RM 1218	
38112300	38112300	0	O-RING 4050 (12.29x3.53)	
38112817	38112817	0	O-RING 4112 (28,17X3,53)	
38113142	38113142	0	O-RING OR 3125 (31,42X2,62)	
53222874	53222874	0	CYLINDER COVER	
53225883	53225883	0	CONNECTION	
56125340	56125340	0	PULL ROD	
56125441	56125441	0	ROD	
56125829	56125829	0	STOP	
56125876	56125876	0	BUSHING	
56125884	56125884	0	CYLINDER PISTON	
56125885	56125885	0	CYLINDER	
56125886	56125886	0	STOP	
56325347	56325347	0	ROD	

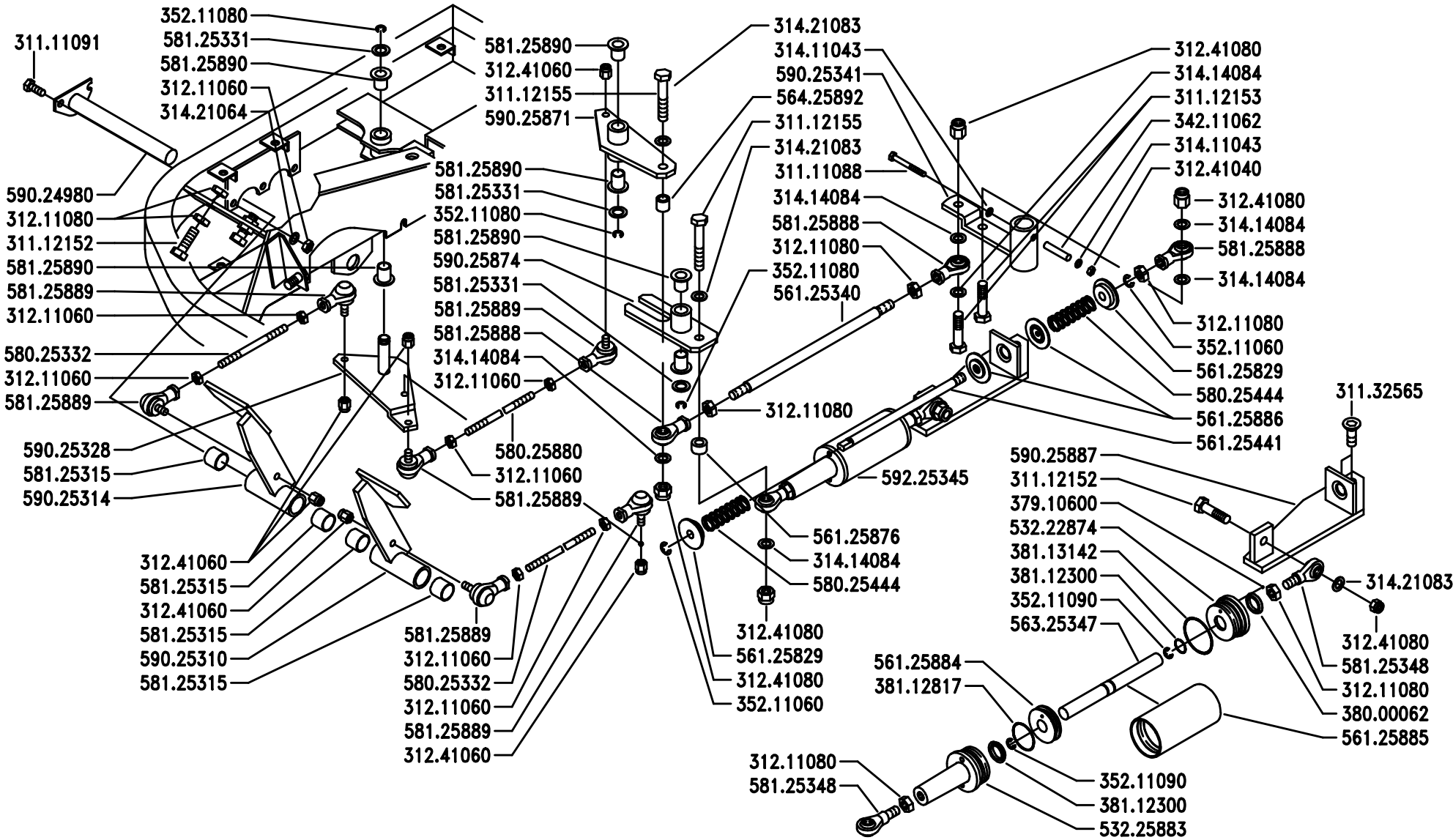

BCS	SERIE MA.TRA	COMANDI (MT103 – MT104) SYSTEM CONTROLS (MT103 – MT104) COMMANDES (MT103 – MT104) MANDOS (MT103 – MT104) STEUERN (MT103 – MT104)	DALLA MACCHINA DE LA MAQUINA DE LA MACHINE FROM THE MACHINE AB DER MASCHINE N.	Sostituisce I05/0 Sostituye I05/0 Remplace I05/0 Replaces I05/0 Ersätzt I05/0	I05 2/199

Pos.	Code	Q.ty	Description	Notes
56425892	56425892	0	BUSHING	
58025332	58025332	0	STUD BOLT	
58025444	58025444	0	SPRING	
58025880	58025880	0	STUD BOLT	
58125315	58125315	0	BUSHING	
58125331	58125331	0	SHIM	
58125348	58125348	0	TERMINAL	
58125888	58125888	0	BALL JOINT	
58125889	58125889	0	BALL JOINT	
58125890	58125890	0	BUSHING	
59024980	59024980	0	AXLE	
59025310	59025310	0	PEDAL	
59025314	59025314	0	PEDAL	
59025328	59025328	0	ROCKER	
59025341	59025341	0	COMMAND LEVER	
59025871	59025871	0	ROCKER	
59025874	59025874	0	ROCKER	
59025887	59025887	0	RETAINER	
59225345	59225345	0	CYLINDER	

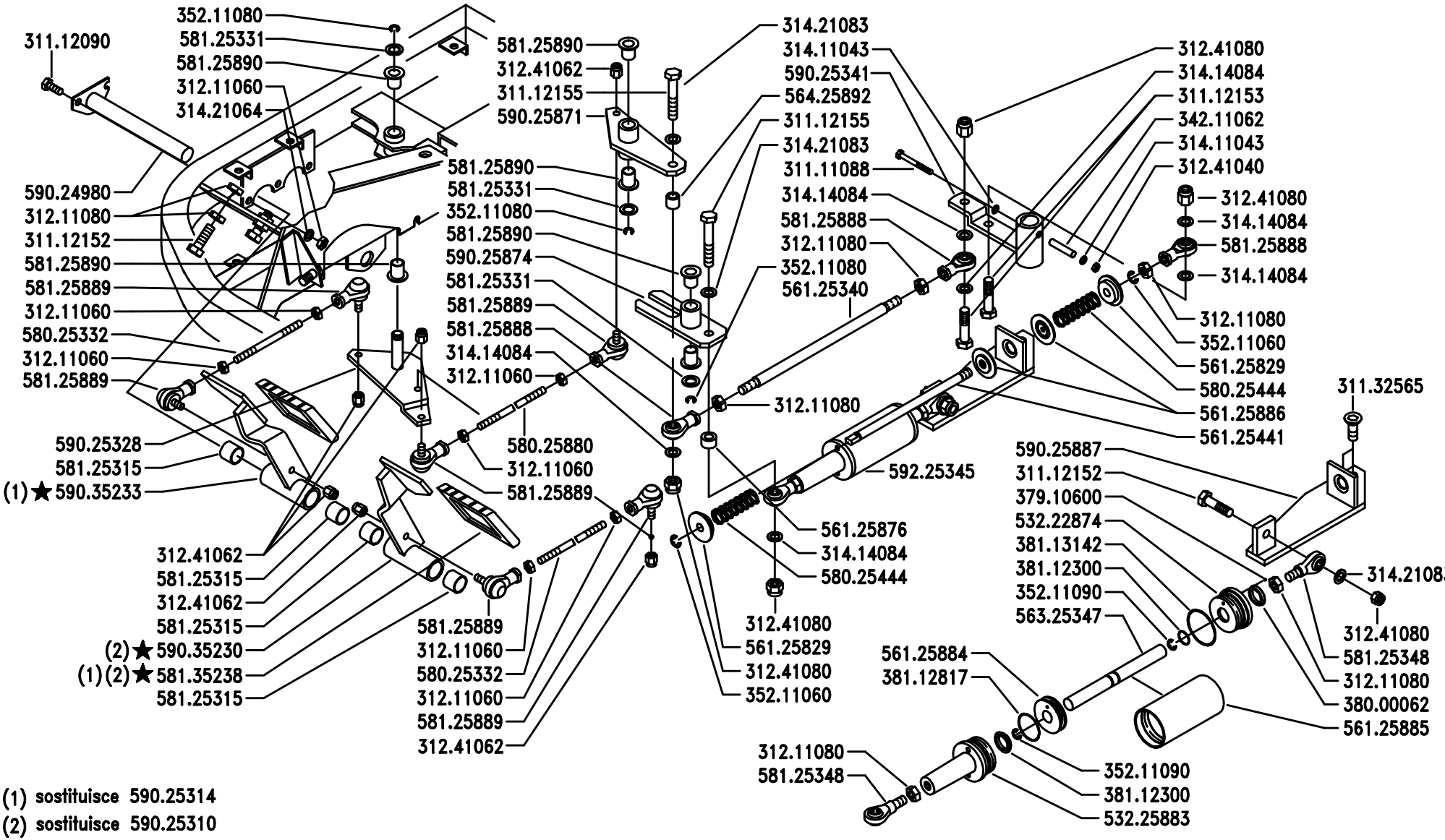

(1) sostituisce 590.25314
(2) sostituisce 590.25310

BCS

SERIE
MA.TRA

COMANDI (MT103 – MT104 – MT205)

SYSTEM CONTROLS (MT103 – MT104 – MT205)
COMMANDES (MT103 – MT104 – MT205)
MANDOS (MT103 – MT104 – MT205)
STEUERN (MT103 – MT104 – MT205)

DALLA MACCHINA
DE LA MAQUINA
DE LA MACHINE
FROM THE MACHINE
AB DER MASCHINE
★ N. 1195

I05

9/1999

Pos.	Code	Q.ty	Description	Notes
31111088	31111088	0	SCREW TE M4X40 UNI 5737 8G	
31112090	31112090	0	SCREW TE M6X16 UNI 5739 8G	
31112152	31112152	0	SCREW TE M8X30 UNI 5739 8G	
31112153	31112153	0	SCREW TE M8X35 UNI 5739 8G	
31112155	31112155	0	SCREW TE M8X45 UNI 5739 8G	
31132565	31132565	0	SCREW TSVEI M8x16 UNI 5933	
31211060	31211060	0	HEXAGONAL NUT M8	
31211080	31211080	0	NUT M8	
31241040	31241040	0	SELFLOCK NUT M4	
31241062	31241062	0	SELFLOCK NUT M6	
31241080	31241080	0	HEXAGON SELFLOCK NUT M8	
31411043	31411043	0	WASHER 4,3X9	
31414084	31414084	0	WASHER 8,4	
31421064	31421064	0	WASHER	
31421083	31421083	0	WASHER	
34211062	34211062	0	ROLL PIN	
35211060	35211060	0	SEEGER RING E 6 UNI 7434	
35211080	35211080	0	SEEGER RING E 8 UNI 7434	
35211090	35211090	0	SEEGER RING E 9 UNI 7434	
37910600	37910600	0	SFERA 3/32 GRADO C	
38000062	38000062	0	GASKET RM 1218	
38112300	38112300	0	O-RING 4050 (12.29x3.53)	
38112817	38112817	0	O-RING 4112 (28,17X3,53)	
38113142	38113142	0	O-RING OR 3125 (31,42X2,62)	
53222874	53222874	0	CYLINDER COVER	
53225883	53225883	0	CONNECTION	
56125340	56125340	0	PULL ROD	
56125441	56125441	0	ROD	
56125829	56125829	0	STOP	
56125876	56125876	0	BUSHING	
56125884	56125884	0	CYLINDER PISTON	
56125885	56125885	0	CYLINDER	
56125886	56125886	0	STOP	
56325347	56325347	0	ROD	

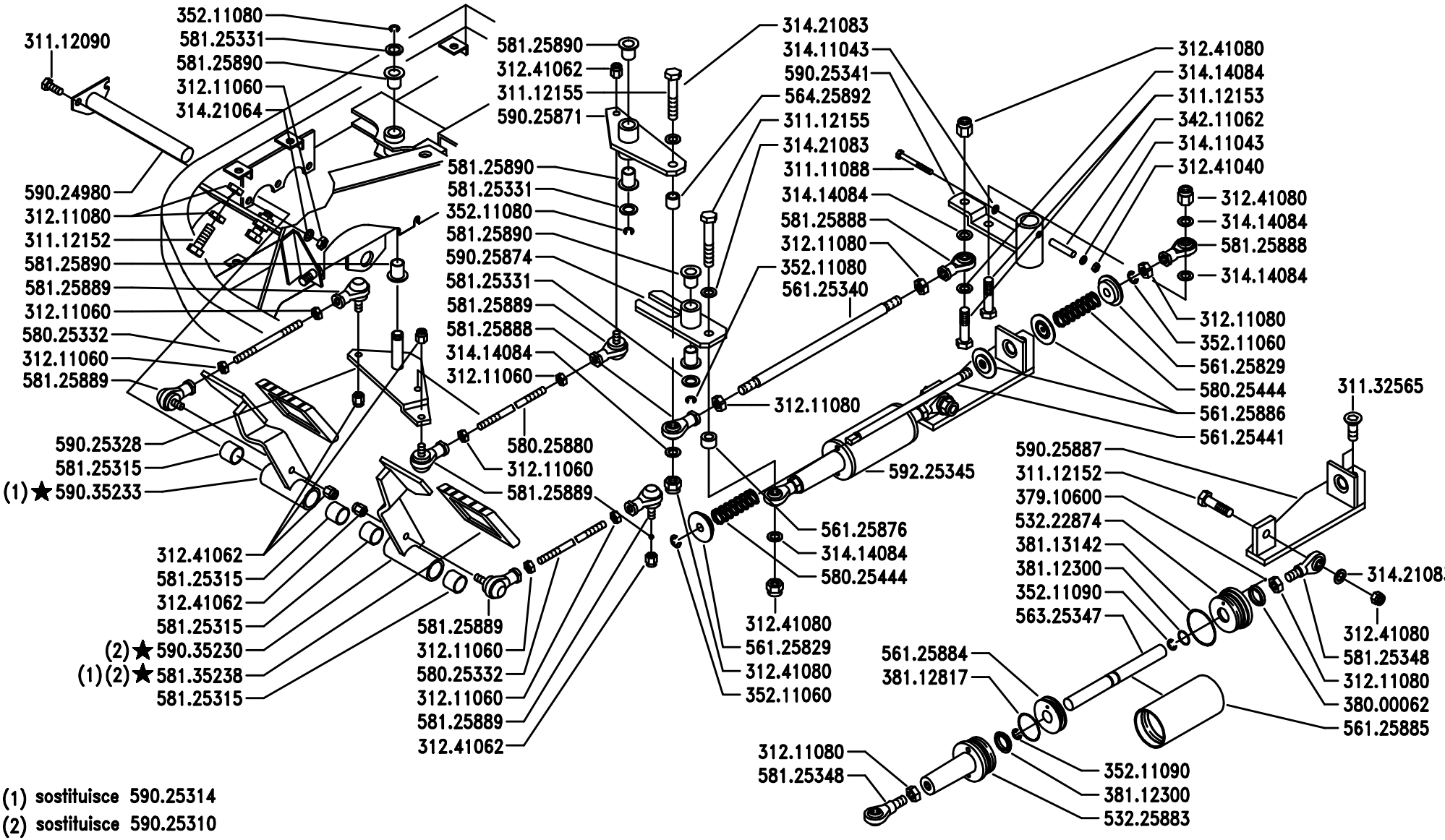

(1) sostituisce 590.25314
(2) sostituisce 590.25310

BCS

SERIE
MA.TRA

COMANDI (MT103 – MT104 – MT205)

SYSTEM CONTROLS (MT103 – MT104 – MT205)
COMMANDES (MT103 – MT104 – MT205)
MANDOS (MT103 – MT104 – MT205)
STEUERN (MT103 – MT104 – MT205)

DALLA MACCHINA
DE LA MAQUINA
DE LA MACHINE
FROM THE MACHINE
AB DER MASCHINE
★ N. 1195

I05

9/1999

Pos.	Code	Q.ty	Description	Notes
56425892	56425892	0	BUSHING	
58025332	58025332	0	STUD BOLT	
58025444	58025444	0	SPRING	
58025880	58025880	0	STUD BOLT	
58125315	58125315	0	BUSHING	
58125331	58125331	0	SHIM	
58125348	58125348	0	TERMINAL	
58125888	58125888	0	BALL JOINT	
58125889	58125889	0	BALL JOINT	
58125890	58125890	0	BUSHING	
58135238	58135238	0	PEDAL COVER	
59024980	59024980	0	AXLE	
59025328	59025328	0	ROCKER	
59025341	59025341	0	COMMAND LEVER	
59025871	59025871	0	ROCKER	
59025874	59025874	0	ROCKER	
59025887	59025887	0	RETAINER	
59035230	59035230	0	PEDAL	
59035233	59035233	0	PEDAL	
59225345	59225345	0	CYLINDER	

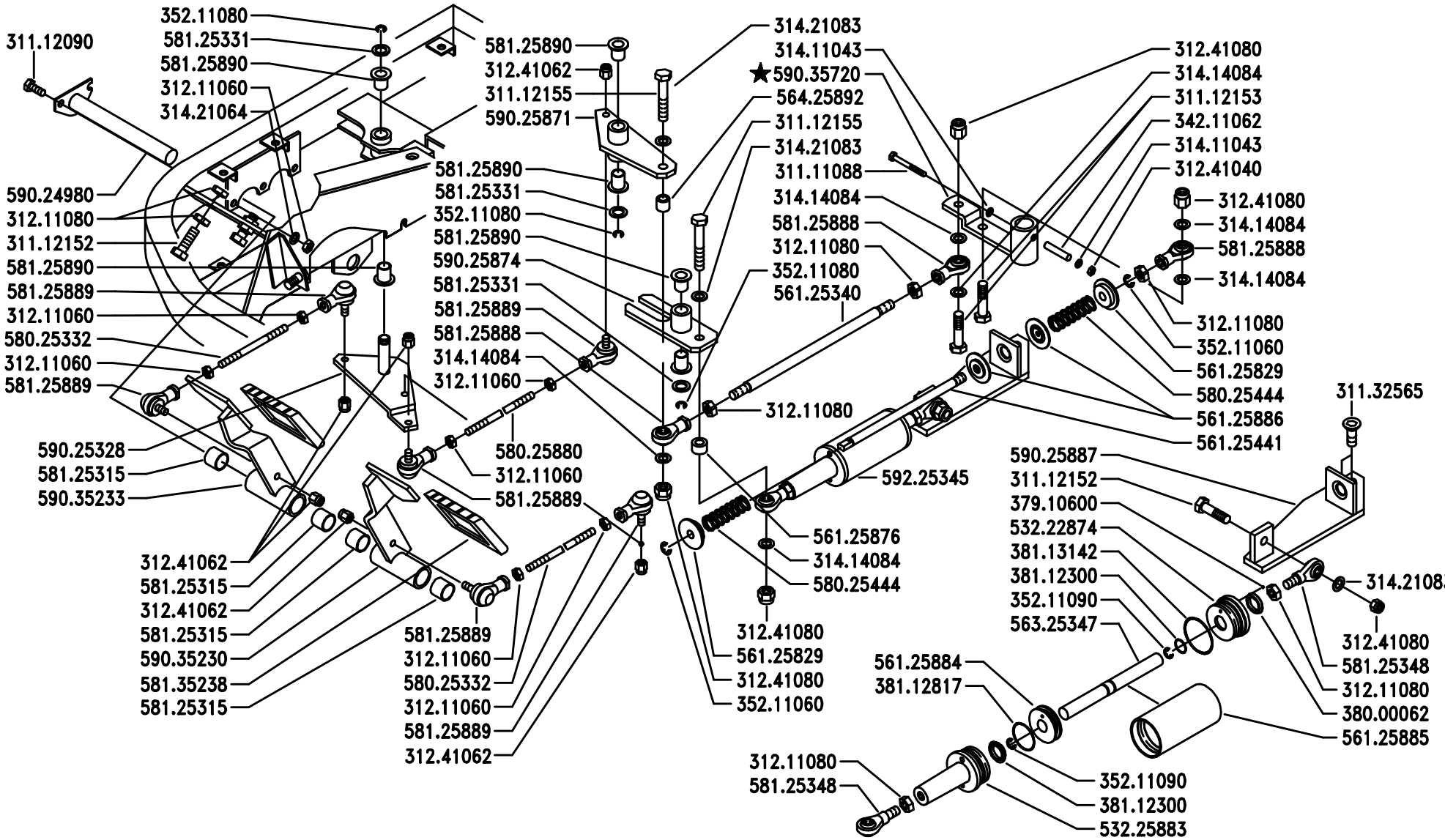

BCS	SERIE MA.TRA	COMANDI (MT103 – MT104 – MT205) SYSTEM CONTROLS (MT103 – MT104 – MT205) COMMANDES (MT103 – MT104 – MT205) MANDOS (MT103 – MT104 – MT205) STEUERN (MT103 – MT104 – MT205)	DALLA MACCHINA DE LA MAQUINA DE LA MACHINE FROM THE MACHINE AB DER MASCHINE ★ N.		I05 3/2003

706475

Pos.	Code	Q.ty	Description	Notes
31111088	31111088	0	SCREW TE M4X40 UNI 5737 8G	
31112090	31112090	0	SCREW TE M6X16 UNI 5739 8G	
31112152	31112152	0	SCREW TE M8X30 UNI 5739 8G	
31112153	31112153	0	SCREW TE M8X35 UNI 5739 8G	
31112155	31112155	0	SCREW TE M8X45 UNI 5739 8G	
31132565	31132565	0	SCREW TSVEI M8x16 UNI 5933	
31211060	31211060	0	HEXAGONAL NUT M8	
31211080	31211080	0	NUT M8	
31241040	31241040	0	SELFLOCK NUT M4	
31241062	31241062	0	SELFLOCK NUT M6	
31241080	31241080	0	HEXAGON SELFLOCK NUT M8	
31411043	31411043	0	WASHER 4,3X9	
31414084	31414084	0	WASHER 8,4	
31421064	31421064	0	WASHER	
31421083	31421083	0	WASHER	
34211062	34211062	0	ROLL PIN	
35211060	35211060	0	SEEGER RING E 6 UNI 7434	
35211080	35211080	0	SEEGER RING E 8 UNI 7434	
35211090	35211090	0	SEEGER RING E 9 UNI 7434	
37910600	37910600	0	SFERA 3/32 GRADO C	
38000062	38000062	0	GASKET RM 1218	
38112300	38112300	0	O-RING 4050 (12.29x3.53)	
38112817	38112817	0	O-RING 4112 (28,17X3,53)	
38113142	38113142	0	O-RING OR 3125 (31,42X2,62)	
53222874	53222874	0	CYLINDER COVER	
53225883	53225883	0	CONNECTION	
56125340	56125340	0	PULL ROD	
56125441	56125441	0	ROD	
56125829	56125829	0	STOP	
56125876	56125876	0	BUSHING	
56125884	56125884	0	CYLINDER PISTON	
56125885	56125885	0	CYLINDER	
56125886	56125886	0	STOP	
56325347	56325347	0	ROD	

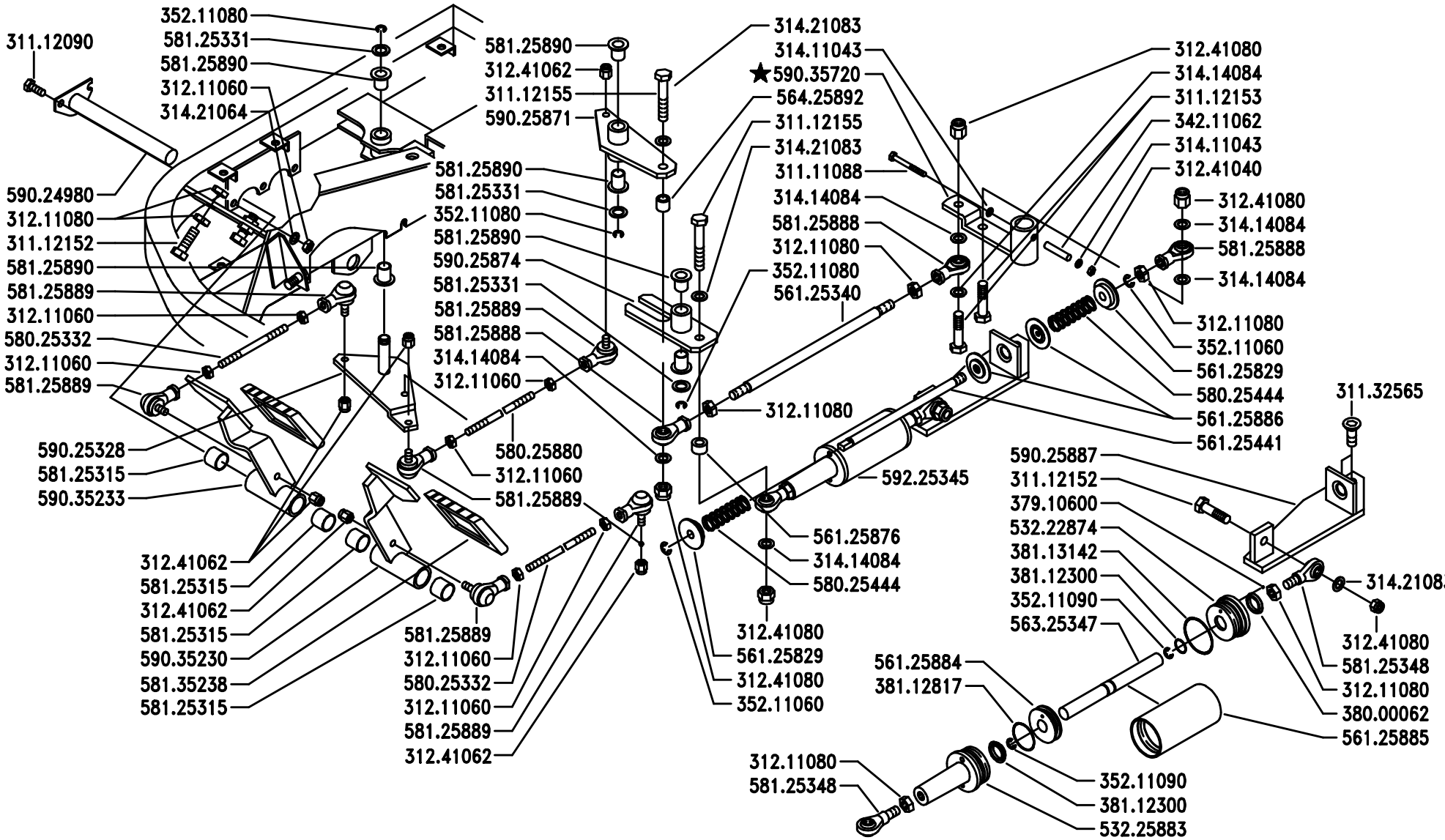

BCS

SERIE

MA.TRA

COMANDI (MT103 – MT104 – MT205)

SYSTEM CONTROLS (MT103 – MT104 – MT205)

COMMANDES (MT103 – MT104 – MT205)

MANDOS (MT103 – MT104 – MT205)

STEUERN (MT103 – MT104 – MT205)

DALLA MACCHINA
DE LA MAQUINA
DE LA MACHINE
FROM THE MACHINE
AB DER MASCHINE

★ N. 706475

I05

3/2003

Pos.	Code	Q.ty	Description	Notes
56425892	56425892	0	BUSHING	
58025332	58025332	0	STUD BOLT	
58025444	58025444	0	SPRING	
58025880	58025880	0	STUD BOLT	
58125315	58125315	0	BUSHING	
58125331	58125331	0	SHIM	
58125348	58125348	0	TERMINAL	
58125888	58125888	0	BALL JOINT	
58125889	58125889	0	BALL JOINT	
58125890	58125890	0	BUSHING	
58135238	58135238	0	PEDAL COVER	
59024980	59024980	0	AXLE	
59025328	59025328	0	ROCKER	
59025871	59025871	0	ROCKER	
59025874	59025874	0	ROCKER	
59025887	59025887	0	RETAINER	
59035230	59035230	0	PEDAL	
59035233	59035233	0	PEDAL	
59035720	59035720	1	COMMAND LEVER	
59225345	59225345	0	CYLINDER	

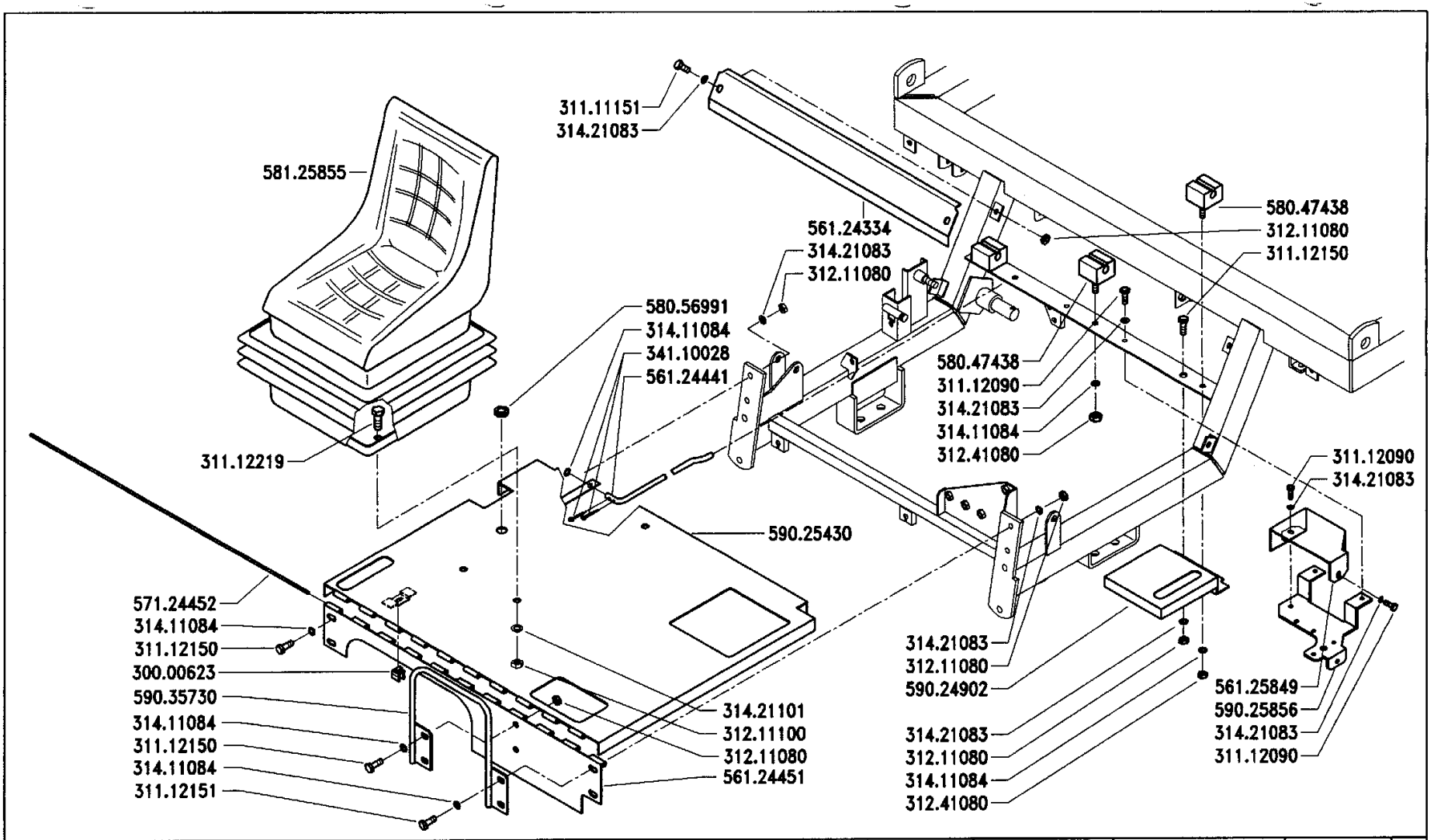

BCS

SERIE

MA.TRA

PIANALE SEDILE (MT104)

SEATING FLATBED (MT104)

PLATEFORME DU SIÈGE (MT104)

PLATAFORMA DEL ASIENTO (MT104)

SITZBODEN (MT104)

DALLA MACCHINA
DE LA MAQUINA
DE LA MACHINE
FROM THE MACHINE
AB DER MASCHINE

N.

J04 | Mod. 0

2/1999

MTE - BCS

Pos.	Code	Q.ty	Description	Notes
30000623	30000623	0	ROD	
31111151	31111151	0	SCREW TE M8X16 UNI 5739 8G	
31112090	31112090	0	SCREW TE M6X16 UNI 5739 8G	
31112150	31112150	0	SCREW TE M8X20 UNI 5739 8G	
31112151	31112151	0	SCREW TE M8X25 UNI 5739 8G	
31112219	31112219	0	SCREW TE M10X25 UNI 5739	
31211080	31211080	0	NUT M8	
31211100	31211100	0	NUT M10	
31241080	31241080	0	HEXAGON SELFLOCK NUT M8	
31411084	31411084	0	WASHER 8,4x17	
31421083	31421083	0	WASHER	
31421101	31421101	0	WASHER	
34110028	34110028	0	SPLIT PIN A3X15 UNI 1336	
56124334	56124334	0	GUARD	
56124441	56124441	0	ROD	
56124451	56124451	0	SEAT PLATFORM	
56125849	56125849	0	GUARD	
57124452	57124452	0	HINGE PIN	
58047438	58047438	0	STOPPER	
58056991	58056991	0	CABLE GLAND 90/200/30	
58125855	58125855	0	SEAT	
59024902	59024902	0	GEAR SELECTOR	
59025430	59025430	0	PLATFORM	
59025856	59025856	0	SUPPORT	
59035730	59035730	0	GUARD	

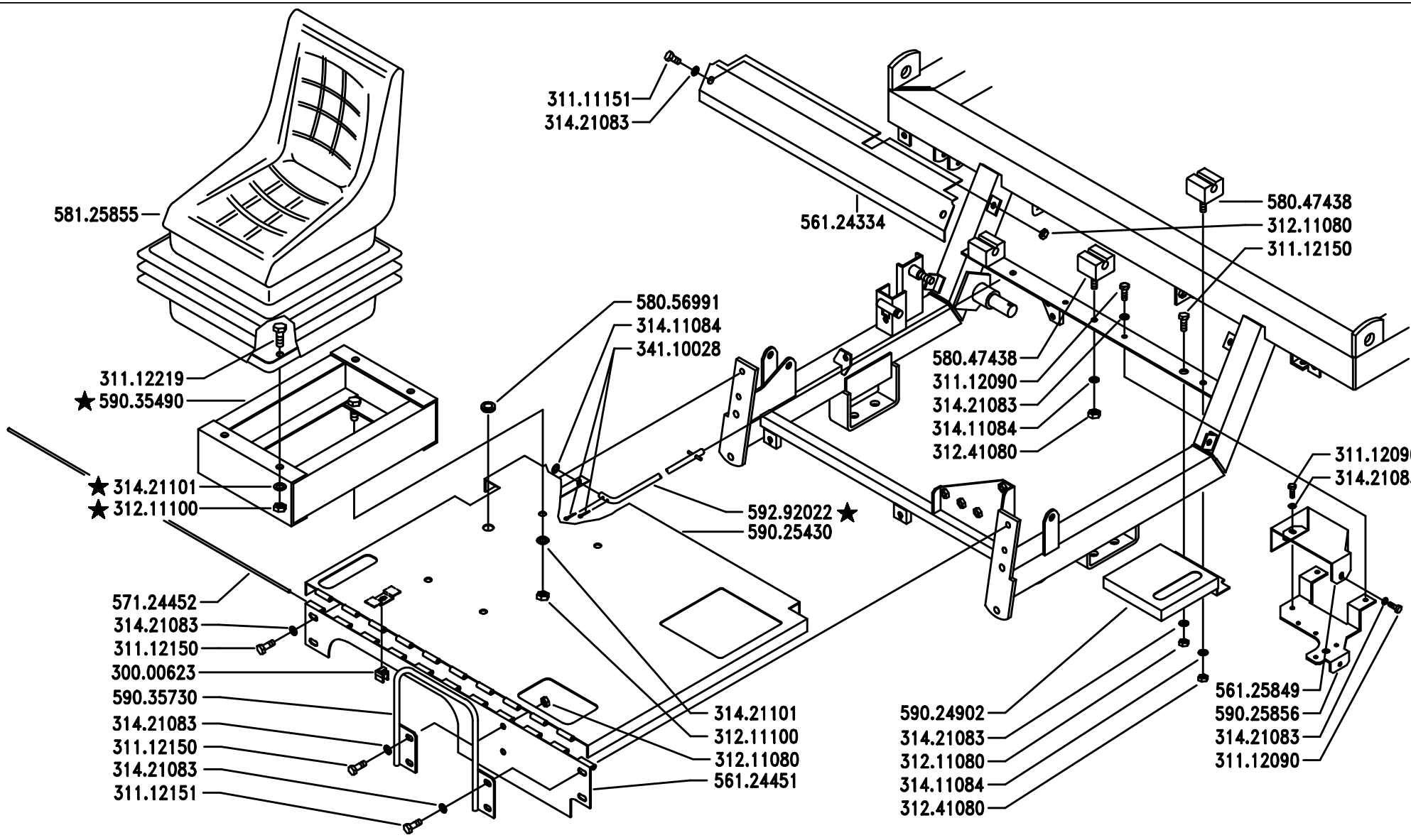

BCS

SERIE

MA.TRA

PIANALE SEDILE (MT104)

SEATING FLATBED (MT104)

PLATEFORME DU SIÈGE (MT104)

PLATAFORMA DEL ASIENTO (MT104)

SITZBODEN (MT104)

DALLA MACCHINA
DE LA MAQUINA
DE LA MACHINE
FROM THE MACHINE
AB DER MASCHINE

★ N.

AGGIORNAMENTO
APLAZAMIENTO
MISE A JOUR
REVISION
ANPASSUNG

J04

5/200

Pos.	Code	Q.ty	Description	Notes
30000623	30000623	0	ROD	
31111151	31111151	0	SCREW TE M8X16 UNI 5739 8G	
31112090	31112090	0	SCREW TE M6X16 UNI 5739 8G	
31112150	31112150	0	SCREW TE M8X20 UNI 5739 8G	
31112151	31112151	0	SCREW TE M8X25 UNI 5739 8G	
31112219	31112219	0	SCREW TE M10X25 UNI 5739	
31211080	31211080	0	NUT M8	
31211100	31211100	0	NUT M10	
31241080	31241080	0	HEXAGON SELFLOCK NUT M8	
31411084	31411084	0	WASHER 8,4x17	
31421083	31421083	0	WASHER	
31421101	31421101	0	WASHER	
34110028	34110028	0	SPLIT PIN A3X15 UNI 1336	
56124334	56124334	0	GUARD	
56124441	56124441	0	ROD	
56124451	56124451	0	SEAT PLATFORM	
56125849	56125849	0	GUARD	
57124452	57124452	0	HINGE PIN	
58047438	58047438	0	STOPPER	
58056991	58056991	0	CABLE GLAND 90/200/30	
58125855	58125855	0	SEAT	
59024902	59024902	0	GEAR SELECTOR	
59025430	59025430	0	PLATFORM	
59025856	59025856	0	SUPPORT	
59035490	59035490	0	SUPPORT	
59035730	59035730	0	GUARD	
59292022	59292022	0	ROD	

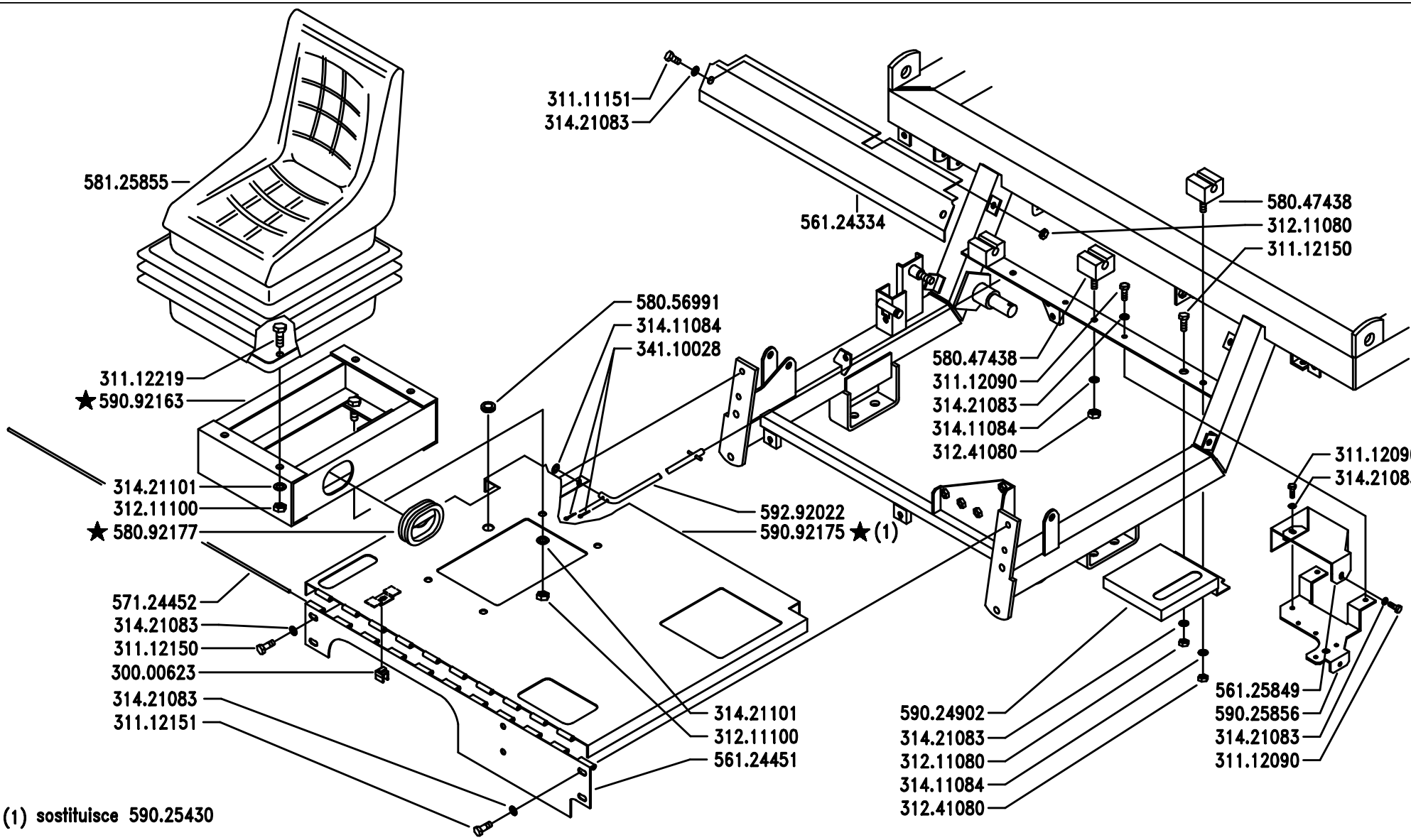

(1) sostituisce 590.25430

BCS

SERIE

MA.TRA

PIANALE SEDILE (MT104)

SEATING FLATBED (MT104)

PLATEFORME DU SIÈGE (MT104)

PLATAFORMA DEL ASIENTO (MT104)

SITZBODEN (MT104)

DALLA MACCHINA
DE LA MAQUINA
DE LA MACHINE
FROM THE MACHINE
AB DER MASCHINE

★ N. 1759

J04

10/200

Pos.	Code	Q.ty	Description	Notes
30000623	30000623	0	ROD	
31111151	31111151	0	SCREW TE M8X16 UNI 5739 8G	
31112090	31112090	0	SCREW TE M6X16 UNI 5739 8G	
31112150	31112150	0	SCREW TE M8X20 UNI 5739 8G	
31112151	31112151	0	SCREW TE M8X25 UNI 5739 8G	
31112219	31112219	0	SCREW TE M10X25 UNI 5739	
31211080	31211080	0	NUT M8	
31211100	31211100	0	NUT M10	
31241080	31241080	0	HEXAGON SELFLOCK NUT M8	
31411084	31411084	0	WASHER 8,4x17	
31421083	31421083	0	WASHER	
31421101	31421101	0	WASHER	
34110028	34110028	0	SPLIT PIN A3X15 UNI 1336	
56124334	56124334	0	GUARD	
56124441	56124441	0	ROD	
56124451	56124451	0	SEAT PLATFORM	
56125849	56125849	0	GUARD	
57124452	57124452	0	HINGE PIN	
58047438	58047438	0	STOPPER	
58056991	58056991	0	CABLE GLAND 90/200/30	
58092177	58092177	0	CABLE GLAND DG48 48X60X68X2,5	
58125855	58125855	0	SEAT	
59024902	59024902	0	GEAR SELECTOR	
59025856	59025856	0	SUPPORT	
59035730	59035730	0	GUARD	
59092163	59092163	0	SUPPORT	
59092175	59092175	0	SEAT PLATFORM	
59292022	59292022	0	ROD	

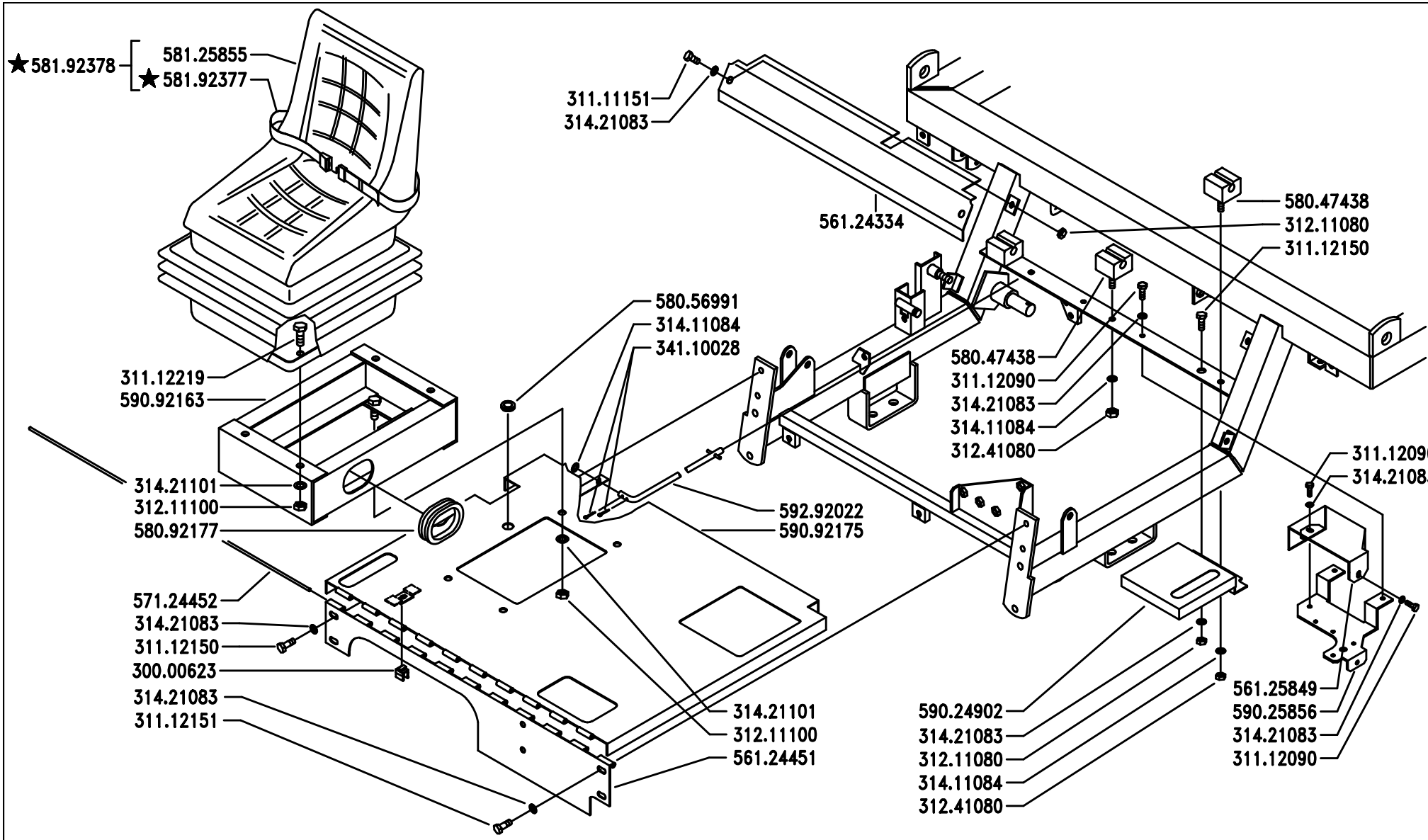

SERIE

MA.TRA

PIANALE SEDILE (MT104)

SEATING FLATBED (MT104)

PLATEFORME DU SIÈGE (MT104)

PLATAFORMA DEL ASIENTO (MT104)

SITZBODEN (MT104)

DALLA MACCHINA
DE LA MAQUINA
DE LA MACHINE
FROM THE MACHINE
AB DER MASCHINE

★ N.

AGGIORNAMENTO
APLAZAMIENTO
MISE A JOUR
REVISION
ANPASSUNG

J04

2/200

Pos.	Code	Q.ty	Description	Notes
30000623	30000623	0	ROD	
31111151	31111151	0	SCREW TE M8X16 UNI 5739 8G	
31112090	31112090	0	SCREW TE M6X16 UNI 5739 8G	
31112150	31112150	0	SCREW TE M8X20 UNI 5739 8G	
31112151	31112151	0	SCREW TE M8X25 UNI 5739 8G	
31112219	31112219	0	SCREW TE M10X25 UNI 5739	
31211080	31211080	0	NUT M8	
31211100	31211100	0	NUT M10	
31241080	31241080	0	HEXAGON SELFLOCK NUT M8	
31411084	31411084	0	WASHER 8,4x17	
31421083	31421083	0	WASHER	
31421101	31421101	0	WASHER	
34110028	34110028	0	SPLIT PIN A3X15 UNI 1336	
56124334	56124334	0	GUARD	
56124441	56124441	0	ROD	
56124451	56124451	0	SEAT PLATFORM	
56125849	56125849	0	GUARD	
57124452	57124452	0	HINGE PIN	
58047438	58047438	0	STOPPER	
58056991	58056991	0	CABLE GLAND 90/200/30	
58092177	58092177	0	CABLE GLAND DG48 48X60X68X2,5	
58125855	58125855	0	SEAT	
58192377	58192377	1	SAFETY BELT	
58192378	58192378	1	SEAT	
59024902	59024902	0	GEAR SELECTOR	
59025856	59025856	0	SUPPORT	
59035730	59035730	0	GUARD	
59092163	59092163	0	SUPPORT	
59092175	59092175	0	SEAT PLATFORM	
59292022	59292022	0	ROD	

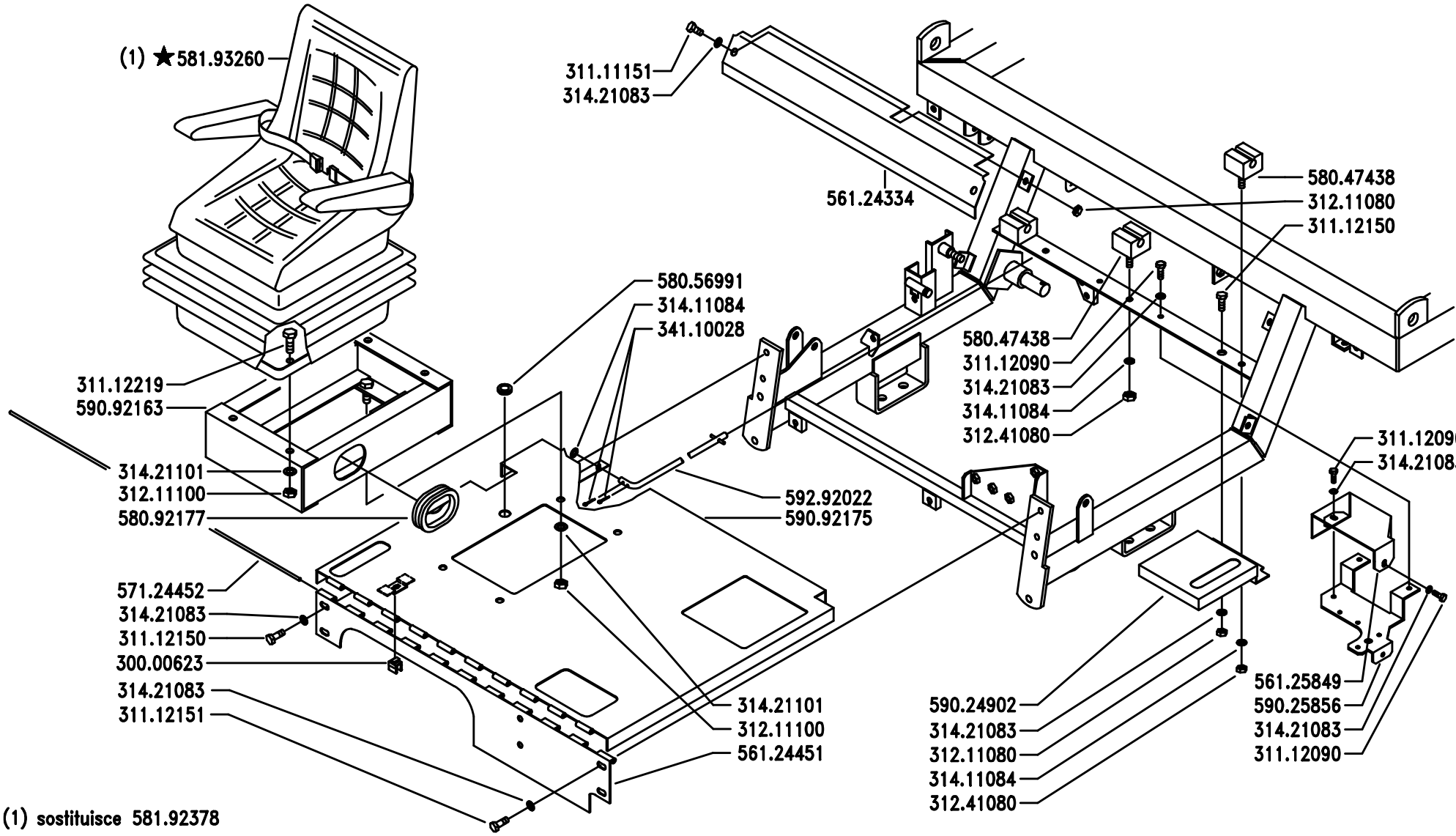

(1) sostituisce 581.92378

SERIE

MA.TRA

PIANALE SEDILE (MT104)

SEATING FLATBED (MT104)

PLATEFORME DU SIÈGE (MT104)

PLATAFORMA DEL ASIENTO (MT104)

SITZBODEN (MT104)

DALLA MACCHINA
DE LA MAQUINA
DE LA MACHINE
FROM THE MACHINE
AB DER MASCHINE

★ N.

AGGIORNAMENTO
APLAZAMIENTO
MISE A JOUR
REVISION
ANPASSUNG

J04

1/2005

Pos.	Code	Q.ty	Description	Notes
30000623	30000623	0	ROD	
31111151	31111151	0	SCREW TE M8X16 UNI 5739 8G	
31112090	31112090	0	SCREW TE M6X16 UNI 5739 8G	
31112150	31112150	0	SCREW TE M8X20 UNI 5739 8G	
31112151	31112151	0	SCREW TE M8X25 UNI 5739 8G	
31112219	31112219	0	SCREW TE M10X25 UNI 5739	
31211080	31211080	0	NUT M8	
31211100	31211100	0	NUT M10	
31241080	31241080	0	HEXAGON SELFLOCK NUT M8	
31411084	31411084	0	WASHER 8,4x17	
31421083	31421083	0	WASHER	
31421101	31421101	0	WASHER	
34110028	34110028	0	SPLIT PIN A3X15 UNI 1336	
56124334	56124334	0	GUARD	
56124441	56124441	0	ROD	
56124451	56124451	0	SEAT PLATFORM	
56125849	56125849	0	GUARD	
57124452	57124452	0	HINGE PIN	
58047438	58047438	0	STOPPER	
58056991	58056991	0	CABLE GLAND 90/200/30	
58092177	58092177	0	CABLE GLAND DG48 48X60X68X2,5	
58193260	58193260	1	SEAT	
59024902	59024902	0	GEAR SELECTOR	
59025856	59025856	0	SUPPORT	
59035730	59035730	0	GUARD	
59092163	59092163	0	SUPPORT	
59092175	59092175	0	SEAT PLATFORM	
59292022	59292022	0	ROD	

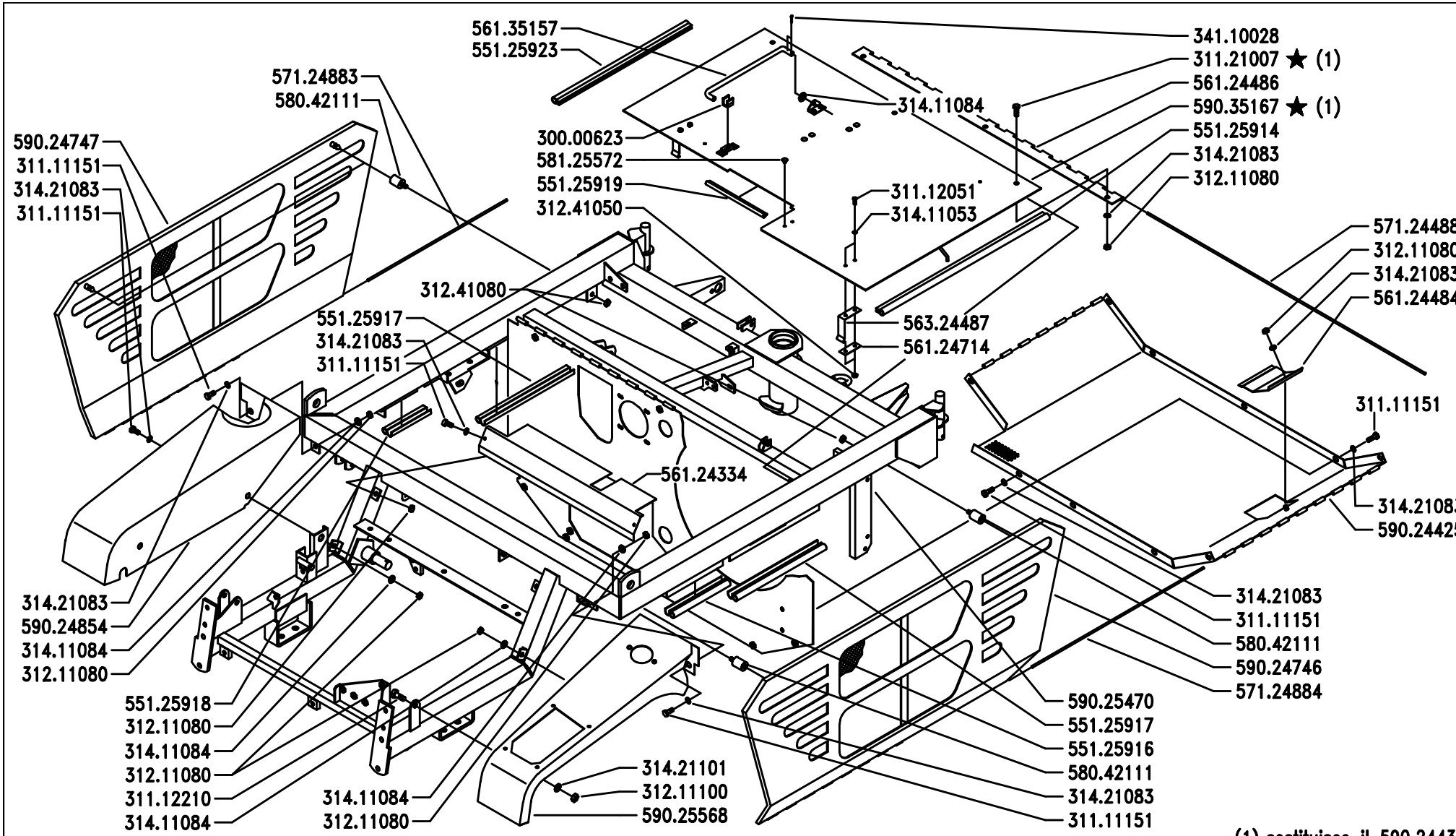

(1) sostituisce il 590.2443

BCS

SERIE

MA.TRA

TELAIO E PROTEZIONI (MT100 – MT104)

FRAME AND PROTECTIONS (MT100 – 104)

CHÂSSIS ET PROTECTIONS (MT100 – 104)

CHASIS Y PROTECCIONES (MT100 – 104)

GESTELL UNS ABSICHERUNGEN (MT100 – 104)

DALLA MACCHINA
DE LA MAQUINA
DE LA MACHINE
FROM THE MACHINE
AB DER MASCHINE

★ N.

AGGIORNAMENTO
APLAZAMIENTO
MISE A JOUR
REVISION
ANPASSUNG

K01

6/1999

Pos.	Code	Q.ty	Description	Notes
30000623	30000623	0	ROD	
31111151	31111151	0	SCREW TE M8X16 UNI 5739 8G	
31112051	31112051	0	SCREW TE M5X14 UNI 5739 8G	
31112210	31112210	0	SCREW TE M10X20 UNI 5739	
31121007	31121007	0	SCREW BCEI M8X20 ISO7380	
31211080	31211080	0	NUT M8	
31211100	31211100	0	NUT M10	
31241050	31241050	0	SELFLOCK NUT M5 6S	
31241080	31241080	0	HEXAGON SELFLOCK NUT M8	
31411053	31411053	0	WASHER 5,3x10	
31411084	31411084	0	WASHER 8,4x17	
31421083	31421083	0	WASHER	
31421101	31421101	0	WASHER	
34110028	34110028	0	SPLIT PIN A3X15 UNI 1336	
55125914	55125914	0	GASKET	
55125916	55125916	0	GASKET	
55125917	55125917	0	GASKET	
55125918	55125918	0	GASKET	
55125919	55125919	0	GASKET mt. 5	
55125923	55125923	0	GASKET	
56124334	56124334	0	GUARD	
56124484	56124484	0	PANEL FLAP	
56124486	56124486	0	CONNECTION	
56124714	56124714	0	SMALL PLATE	
56135157	56135157	0	ROD	
56324487	56324487	0	SPRING	
57124488	57124488	0	HINGE PIN	
57124883	57124883	0	HINGE PIN	
57124884	57124884	0	HINGE PIN	
58042111	58042111	0	STOPPER	
58125572	58125572	0	PLUG	
59024425	59024425	0	SHIELD	
59024746	59024746	0	GUARD	
59024747	59024747	0	GUARD	

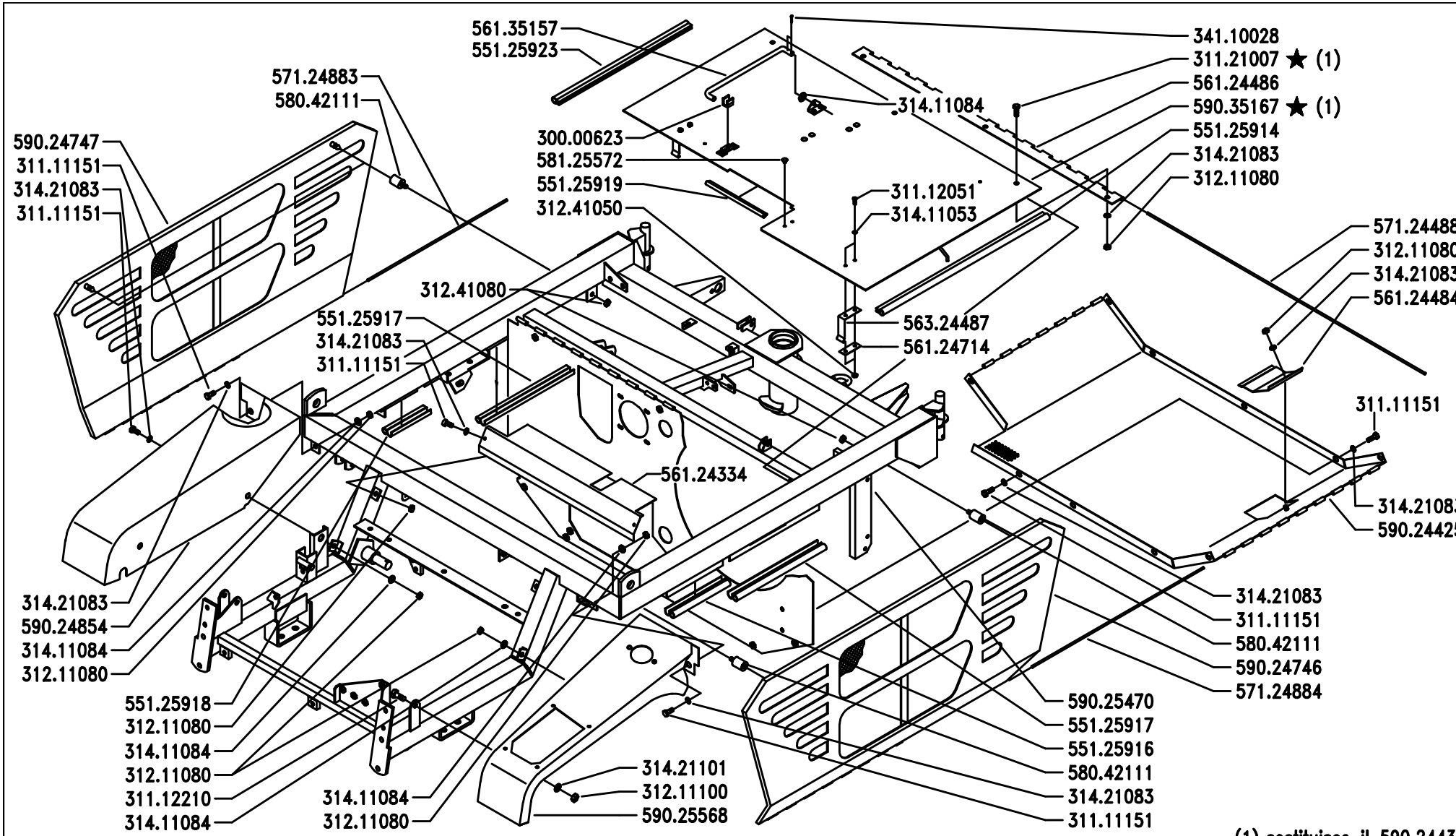

(1) sostituisce il 590.2443

BCS

SERIE

MA.TRA

TELAIO E PROTEZIONI (MT100 – MT104)

FRAME AND PROTECTIONS (MT100 – 104)

CHÂSSIS ET PROTECTIONS (MT100 – 104)

CHASIS Y PROTECCIONES (MT100 – 104)

GESTELL UNS ABSICHERUNGEN (MT100 – 104)

DALLA MACCHINA
DE LA MAQUINA
DE LA MACHINE
FROM THE MACHINE
AB DER MASCHINE

★ N.

AGGIORNAMENTO
APLAZAMIENTO
MISE A JOUR
REVISION
ANPASSUNG

K01

6/1999

Pos.	Code	Q.ty	Description	Notes
59024854	59024854	0	RIGHT REAR FENDER	
59025470	59025470	0	CHASSIS FRAME	
59025568	59025568	0	LEFT REAR FENDER	
59035167	59035167	0	ENGINE HOOD	

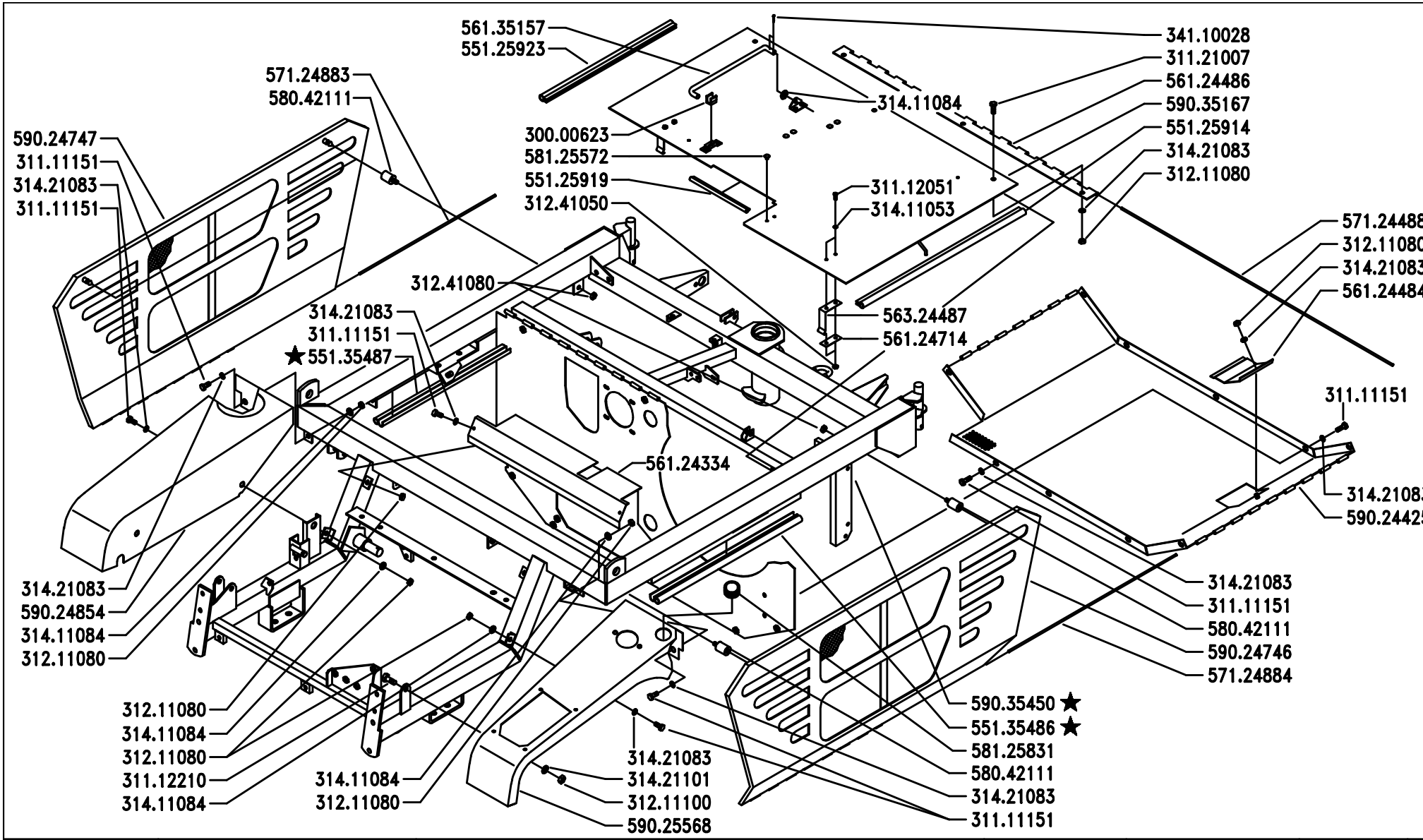

BCS

SERIE

MA.TRA

TELAIO E PROTEZIONI (MT100 – MT104)

FRAME AND PROTECTIONS (MT100 – 104)

CHÂSSIS ET PROTECTIONS (MT100 – 104)

CHASIS Y PROTECCIONES (MT100 – 104)

GESTELL UNS ABSICHERUNGEN (MT100 – 104)

DALLA MACCHINA
DE LA MAQUINA
DE LA MACHINE
FROM THE MACHINE
AB DER MASCHINE

★ N. 1328

K01

7/200

Pos.	Code	Q.ty	Description	Notes
30000623	30000623	0	ROD	
31111151	31111151	0	SCREW TE M8X16 UNI 5739 8G	
31112051	31112051	0	SCREW TE M5X14 UNI 5739 8G	
31112210	31112210	0	SCREW TE M10X20 UNI 5739	
31121007	31121007	0	SCREW BCEI M8X20 ISO7380	
31211080	31211080	0	NUT M8	
31211100	31211100	0	NUT M10	
31241050	31241050	0	SELFLOCK NUT M5 6S	
31241080	31241080	0	HEXAGON SELFLOCK NUT M8	
31411053	31411053	0	WASHER 5,3x10	
31411084	31411084	0	WASHER 8,4x17	
31421083	31421083	0	WASHER	
31421101	31421101	0	WASHER	
34110028	34110028	0	SPLIT PIN A3X15 UNI 1336	
55125914	55125914	0	GASKET	
55125919	55125919	0	GASKET mt. 5	
55125923	55125923	0	GASKET	
55135486	55135486	0	GASKET	
55135487	55135487	0	GASKET	
56124334	56124334	0	GUARD	
56124484	56124484	0	PANEL FLAP	
56124486	56124486	0	CONNECTION	
56124714	56124714	0	SMALL PLATE	
56135157	56135157	0	ROD	
56324487	56324487	0	SPRING	
57124488	57124488	0	HINGE PIN	
57124883	57124883	0	HINGE PIN	
57124884	57124884	0	HINGE PIN	
58042111	58042111	0	STOPPER	
58125572	58125572	0	PLUG	
58125831	58125831	0	CABLE GLAND	
59024425	59024425	0	SHIELD	
59024746	59024746	0	GUARD	
59024747	59024747	0	GUARD	

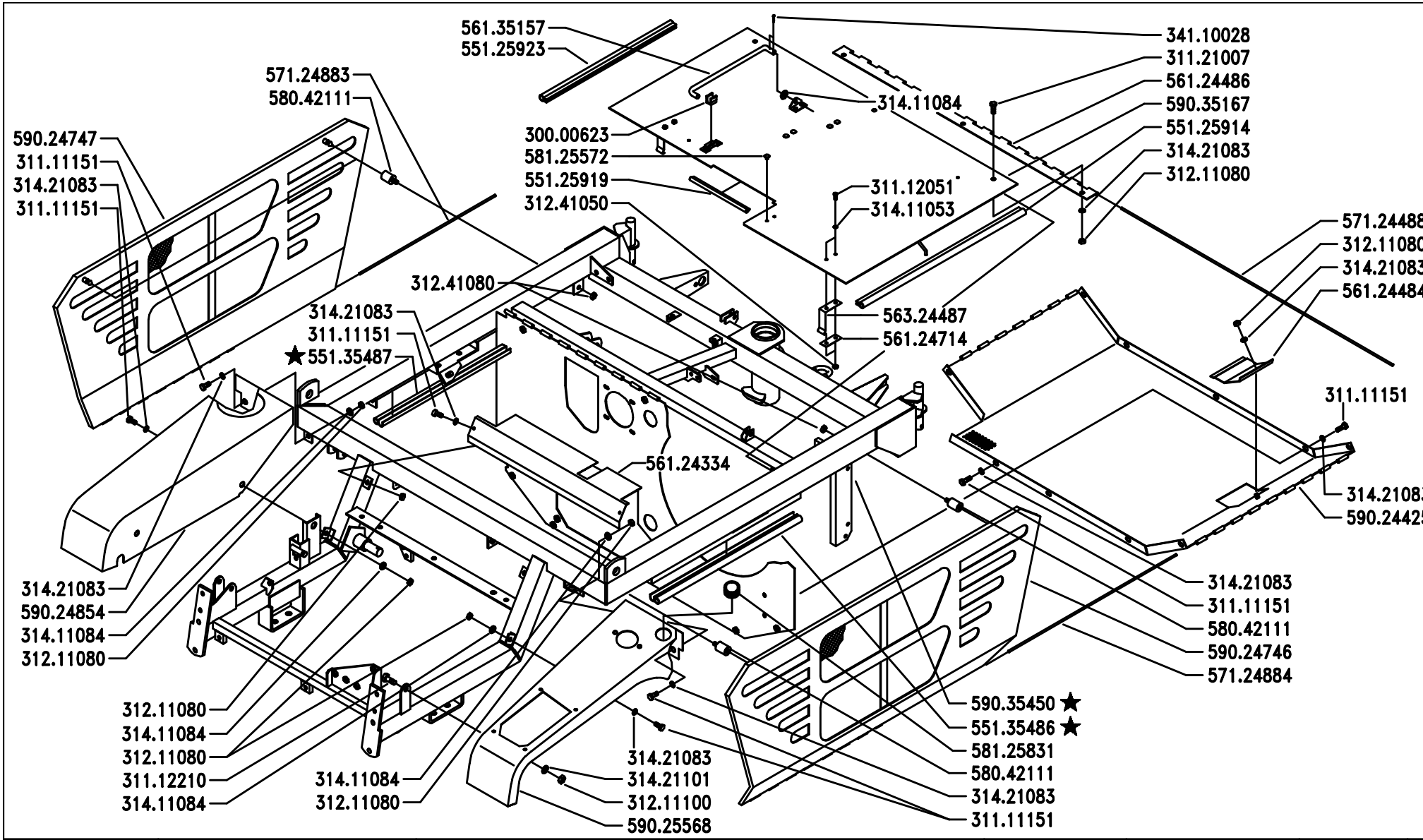

BCS	SERIE MA.TRA	TELAIO E PROTEZIONI (MT100 – MT104) FRAME AND PROTECTIONS (MT100 – 104) CHÂSSIS ET PROTECTIONS (MT100 – 104) CHASIS Y PROTECCIONES (MT100 – 104) GESTELL UNS ABSICHERUNGEN (MT100 – 104)	DALLA MACCHINA DE LA MAQUINA DE LA MACHINE FROM THE MACHINE AB DER MASCHINE ★ N.	1328	K01 7/200

Pos.	Code	Q.ty	Description	Notes
59024854	59024854	0	RIGHT REAR FENDER	
59025568	59025568	0	LEFT REAR FENDER	
59035167	59035167	0	ENGINE HOOD	
59035450	59035450	0	CHASSIS FRAME	

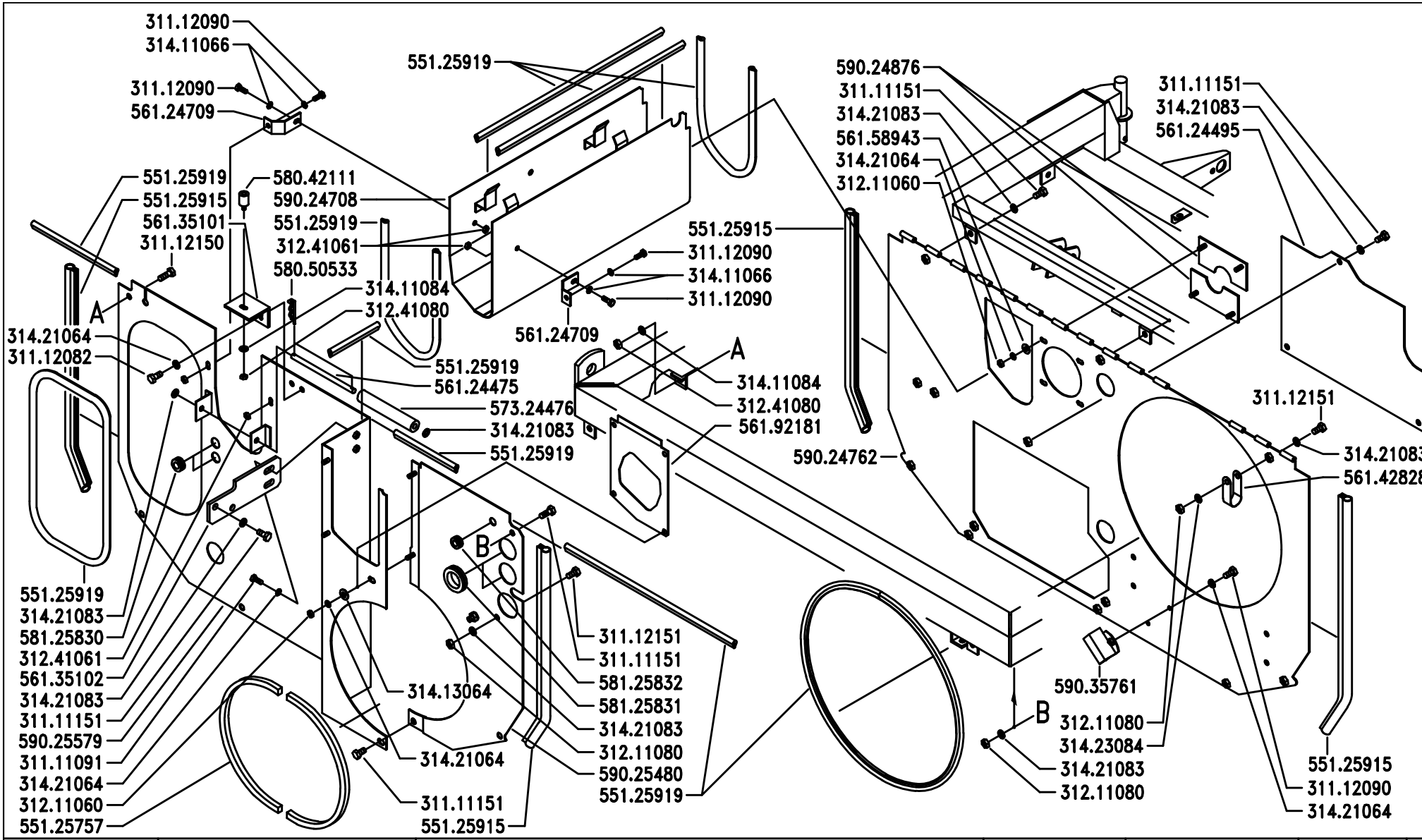

BCS	SERIE MA.TRA	PROTEZIONI (MT104) PROTECTIONS (MT104) PROTECCIONES (MT104) PROTECTIONS (MT104) ABSICHERUNGEN (MT104)	DALLA MACCHINA DE LA MAQUINA DE LA MACHINE FROM THE MACHINE AB DER MASCHINE N.		K07 2/1999

Pos.	Code	Q.ty	Description	Notes
31111091	31111091	0	SCREW E M6X14 UNI 5739 8G	
31111151	31111151	0	SCREW TE M8X16 UNI 5739 8G	
31112082	31112082	0	SCREW TE M6X12 UNI 5739 8G	
31112090	31112090	0	SCREW TE M6X16 UNI 5739 8G	
31112150	31112150	0	SCREW TE M8X20 UNI 5739 8G	
31112151	31112151	0	SCREW TE M8X25 UNI 5739 8G	
31211060	31211060	0	HEXAGONAL NUT M8	
31211080	31211080	0	NUT M8	
31241061	31241061	0	SELFLOCK NUT M6 6S	
31241080	31241080	0	HEXAGON SELFLOCK NUT M8	
31411066	31411066	0	WASHER 6,6x18	
31411084	31411084	0	WASHER 8,4x17	
31413064	31413064	0	WASHER 6,4	
31421064	31421064	0	WASHER	
31421083	31421083	0	WASHER	
31423084	31423084	0	SPRING WASHER 8,4	
55125757	55125757	0	GASKET 15X10	
55125915	55125915	0	GASKET	
55125919	55125919	0	GASKET mt. 5	
56124475	56124475	0	PIN	
56124495	56124495	0	PANEL FLAP	
56124709	56124709	0	SMALL PLATE	
56135101	56135101	0	SUPPORT	
56135102	56135102	0	SUPPORT	
56142828	56142828	0	CLAMP	
56158943	56158943	0	WASHER 7,0x25/2	
56192181	56192181	0	GUARD	
57324476	57324476	0	TUBE	
58042111	58042111	0	STOPPER	
58050533	58050533	0	PIN	
58125830	58125830	0	CABLE GLAND	
58125831	58125831	0	CABLE GLAND	
58125832	58125832	0	BUSHING	
59024708	59024708	0	TUNNEL	

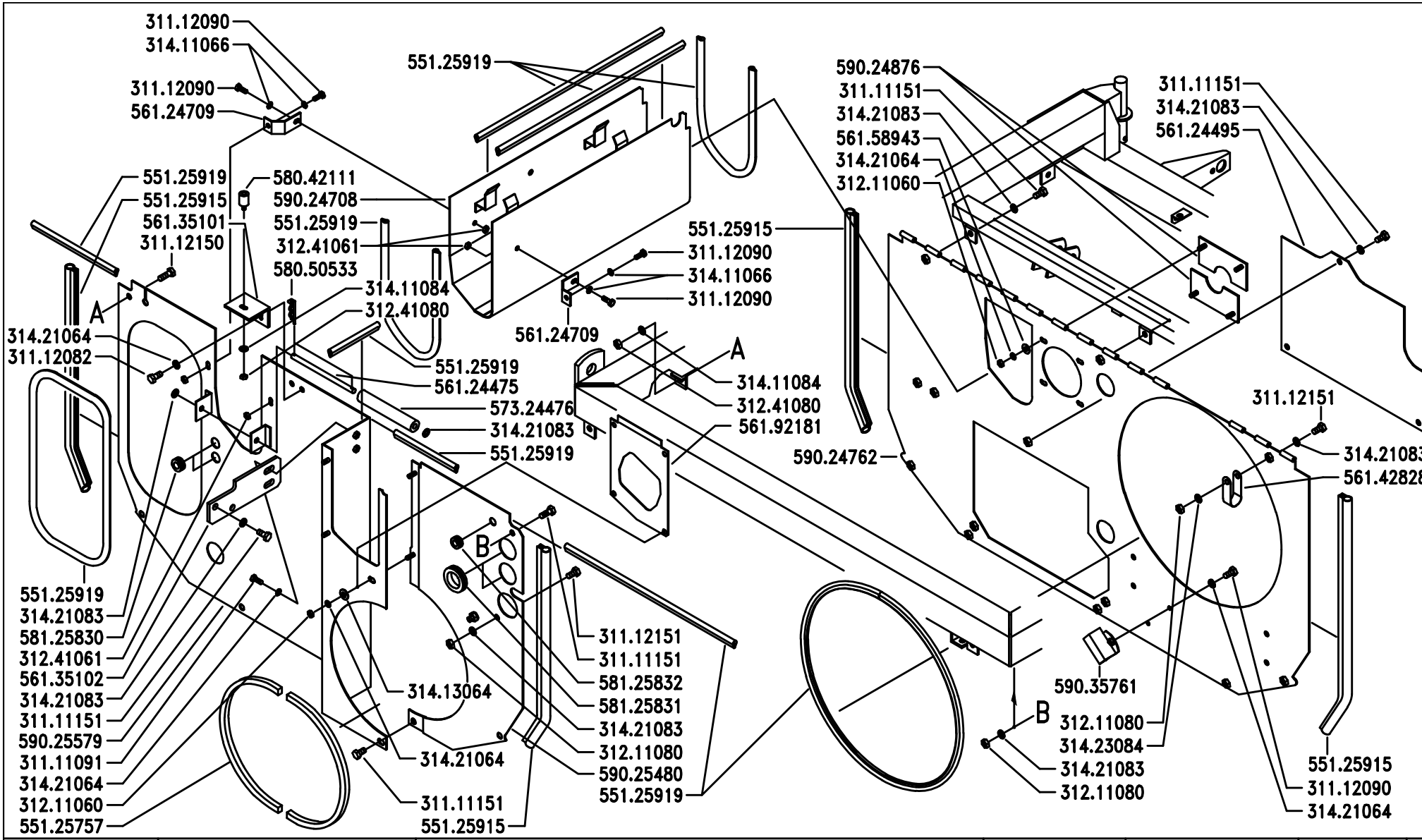

BCS	SERIE MA.TRA	PROTEZIONI (MT104) PROTECTIONS (MT104) PROTECCIONES (MT104) PROTECTIONS (MT104) ABSICHERUNGEN (MT104)	DALLA MACCHINA DE LA MAQUINA DE LA MACHINE FROM THE MACHINE AB DER MASCHINE N.		K07 2/1999

Pos.	Code	Q.ty	Description	Notes
59024762	59024762	0	GUARD	
59024876	59024876	0	PLATE	
59025480	59025480	0	FRONT DEFLECTOR	
59025579	59025579	0	FRONT DEFLECTOR	
59035761	59035761	0	U BOLT	

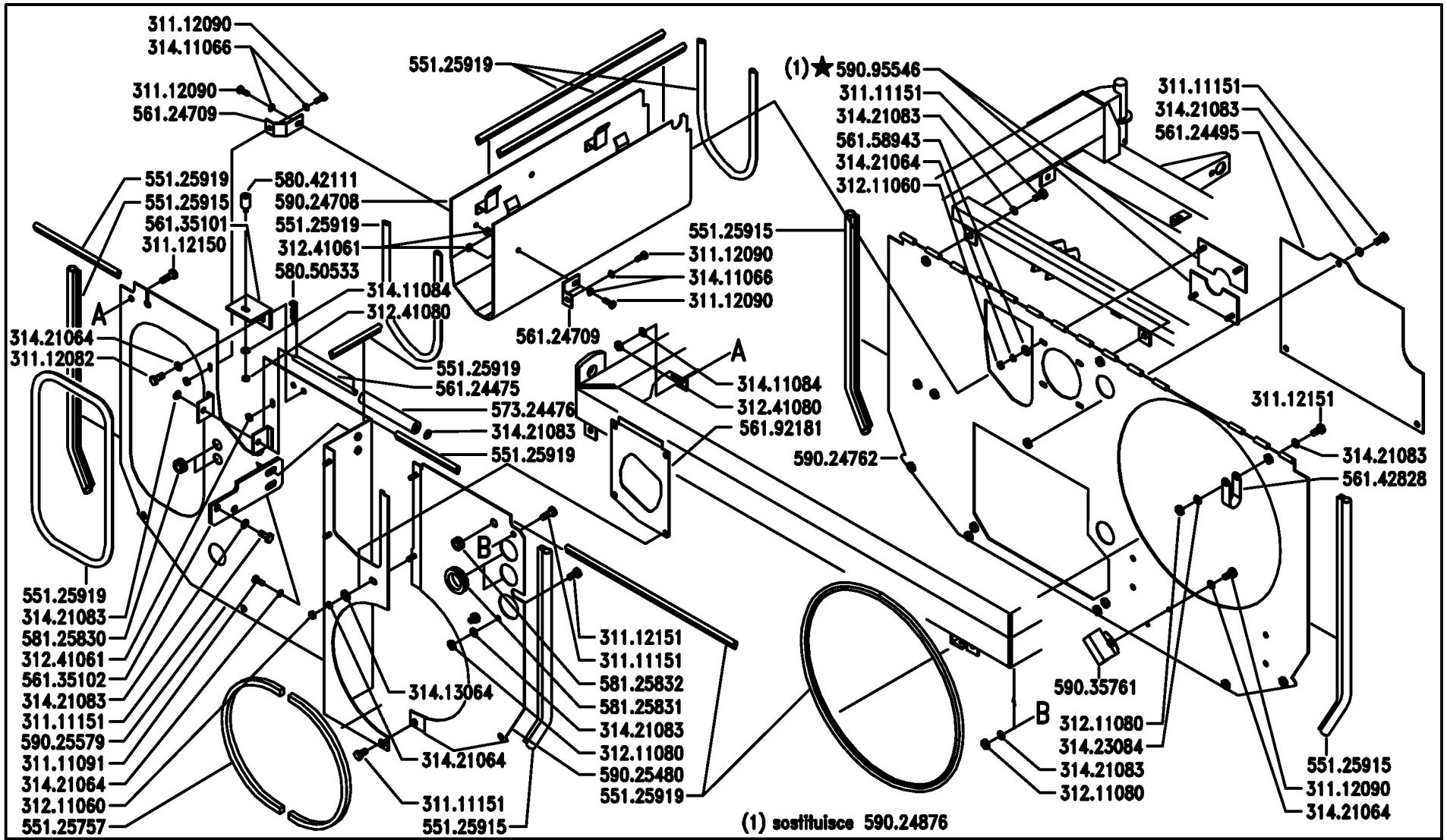

BCS

SERIE

MA.TRA

PROTEZIONI (MT104)

PROTECTIONS (MT104)

PROTECTIONS (MT104)

PROTECCIONES (MT104)

ABSICHERUNGEN (MT104)

DALLA MACCHINA
DE LA MAQUINA
DE LA MACHINE
FROM THE MACHINE
AB DER MASCHINE

★ N.

AGGIORNAMENTO
APLAZAMIENTO
MISE A JOUR
REVISION
ANPASSUNG

K07

Rev. 1

10/2008

DIF - DCS 39007701R

Pos.	Code	Q.ty	Description	Notes
31111091	31111091	1	SCREW E M6X14 UNI 5739 8G	
31111151	31111151	1	SCREW TE M8X16 UNI 5739 8G	
31112082	31112082	1	SCREW TE M6X12 UNI 5739 8G	
31112090	31112090	1	SCREW TE M6X16 UNI 5739 8G	
31112150	31112150	1	SCREW TE M8X20 UNI 5739 8G	
31112151	31112151	1	SCREW TE M8X25 UNI 5739 8G	
31211060	31211060	1	HEXAGONAL NUT M8	
31211080	31211080	1	NUT M8	
31241061	31241061	1	SELFLOCK NUT M6 6S	
31241080	31241080	1	HEXAGON SELFLOCK NUT M8	
31411066	31411066	1	WASHER 6,6x18	
31411084	31411084	1	WASHER 8,4x17	
31413064	31413064	1	WASHER 6,4	
31421064	31421064	1	WASHER	
31421083	31421083	1	WASHER	
31423084	31423084	1	SPRING WASHER 8,4	
55125757	55125757	1	GASKET 15X10	
55125915	55125915	1	GASKET	
55125919	55125919	1	GASKET mt. 5	
56124475	56124475	1	PIN	
56124495	56124495	1	PANEL FLAP	
56124709	56124709	1	SMALL PLATE	
56135101	56135101	1	SUPPORT	
56135102	56135102	1	SUPPORT	
56142828	56142828	1	CLAMP	
56158943	56158943	1	WASHER 7,0x25/2	
56192181	56192181	1	GUARD	
57324476	57324476	1	TUBE	
58042111	58042111	1	STOPPER	
58050533	58050533	1	PIN	
58125830	58125830	1	CABLE GLAND	
58125831	58125831	1	CABLE GLAND	
58125832	58125832	1	BUSHING	
59024708	59024708	1	TUNNEL	

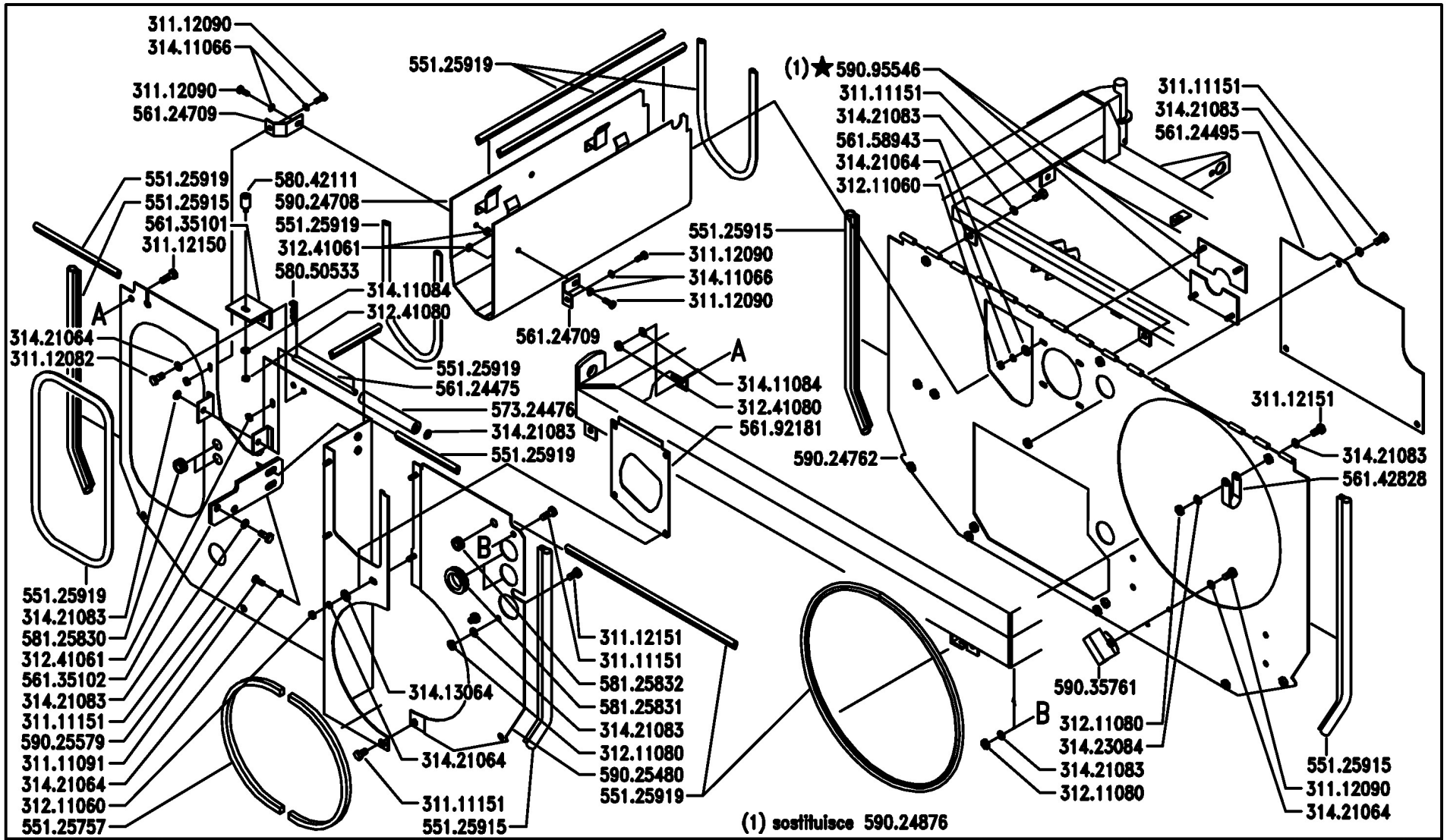

BCS

SERIE

MA.TRA

PROTEZIONI (MT104)

PROTECTIONS (MT104)

PROTECTIONS (MT104)

PROTECCIONES (MT104)

ABSICHERUNGEN (MT104)

DALLA MACCHINA
DE LA MAQUINA
DE LA MACHINE
FROM THE MACHINE
AB DER MASCHINE

★ N.

AGGIORNAMENTO
APLAZAMIENTO
MISE A JOUR
REVISION
ANPASSUNG

K07

Rev. 1

10/2008

DIF - DCS 39007701R

Pos.	Code	Q.ty	Description	Notes
59024762	59024762	1	GUARD	
59025480	59025480	1	FRONT DEFLECTOR	
59025579	59025579	1	FRONT DEFLECTOR	
59035761	59035761	1	U BOLT	
59095546	59095546	1	PLATE	

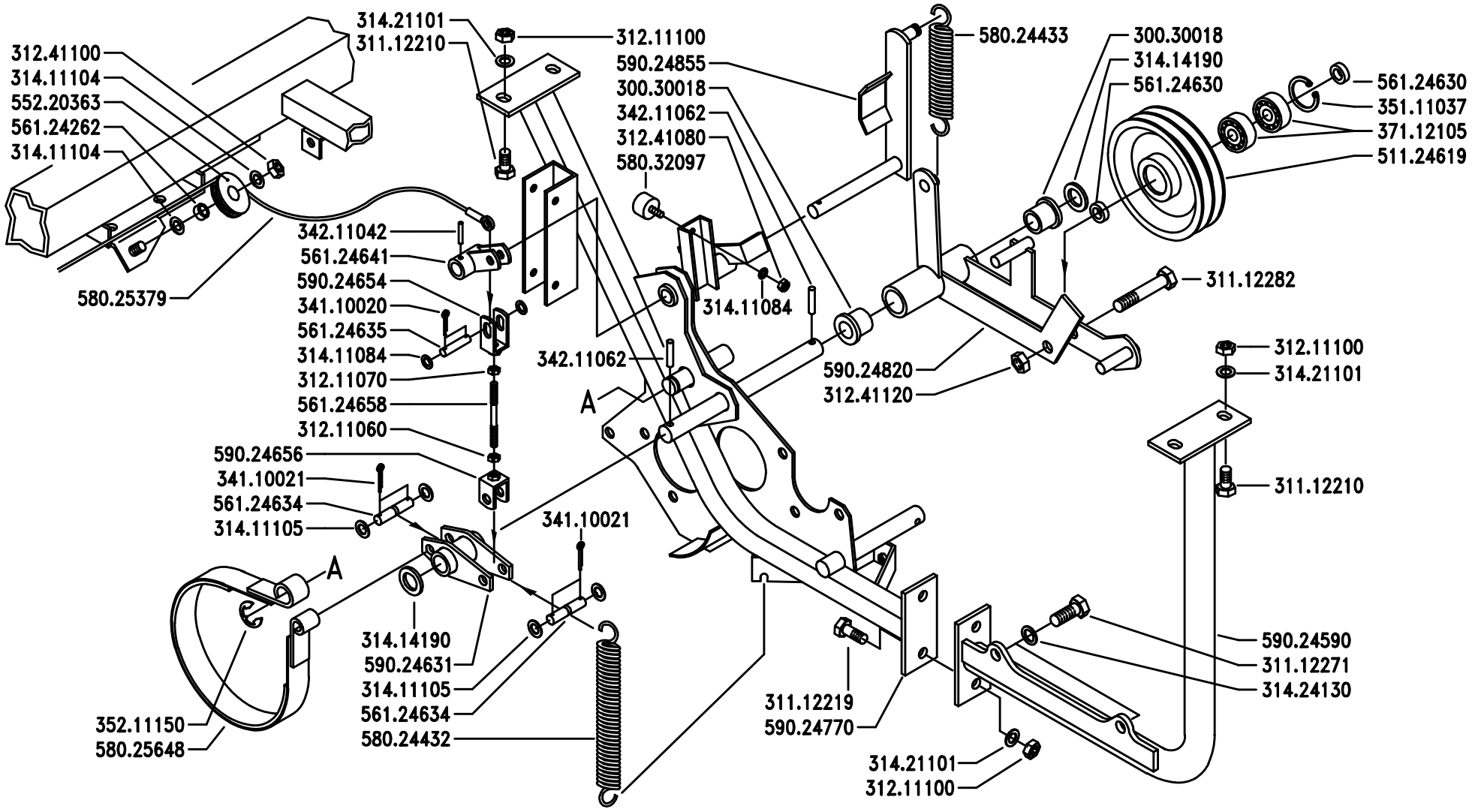

BCS

SERIE

MA.TRA

COMANDO PRESA DI FORZA (MT100 – MT104)

PTO CONTROL (MT100 – MT104)

COMMANDE POUR LA PDF (MT100 – MT104)

MANDO DE LA TOMA DE FUERZA (MT100 – MT104)

STEUERUNG ZAPFWELLE (MT100 – MT104)

DALLA MACCHINA
DE LA MAQUINA
DE LA MACHINE
FROM THE MACHINE
AB DER MASCHINE

N.

Sostituisce	L02/0
Sostituye	L02/0
Remplace	L02/0
Replaces	L02/0
Ersätzt	L02/0

L02

Pos.	Code	Q.ty	Description	Notes
30030018	30030018	0	BUSHING 18x25x25	
31112210	31112210	0	SCREW TE M10X20 UNI 5739	
31112219	31112219	0	SCREW TE M10X25 UNI 5739	
31112271	31112271	0	SCREW TE M12X25 UNI 5739	
31112282	31112282	0	SCREW TE M12X65 UNI 5739 8G	
31211060	31211060	0	HEXAGONAL NUT M8	
31211070	31211070	0	NUT M6	
31211100	31211100	0	NUT M10	
31241080	31241080	0	HEXAGON SELFLOCK NUT M8	
31241100	31241100	0	SELFLOCK HEXAGON NUT M10	
31241120	31241120	0	SELFLOCK NUT M12	
31411084	31411084	0	WASHER 8,4x17	
31411104	31411104	0	WASHER 10,5x18	
31411105	31411105	0	WASHER 10,5x21	
31414190	31414190	0	WASHER 19	
31421101	31421101	0	WASHER	
31424130	31424130	0	PRING WASHER 13	
34110020	34110020	0	SPLIT PIN A2X12 UNI 1336	
34110021	34110021	0	SPLIT PIN A2,0X16 UNI 1336	
34211042	34211042	0	ROLL PIN	
34211062	34211062	0	ROLL PIN	
35111037	35111037	0	SEEGER RING I 37 DIN 472	
35121019	35121019	0	SEEGER RING E 19 DIN 471	
37112105	37112105	0	BEARING 6301-2RS (123712) SKF	
51124619	51124619	0	PULLEY	
55220363	55220363	0	PULLEY	
56124262	56124262	0	SLEEVE	
56124630	56124630	0	SPACER	
56124634	56124634	0	PIN	
56124635	56124635	0	PIN	
56124658	56124658	0	ROD	
58024432	58024432	0	SPRING	
58024433	58024433	0	PULLEY GUIDE SPRING	
58025379	58025379	0	TRANSMISSION	

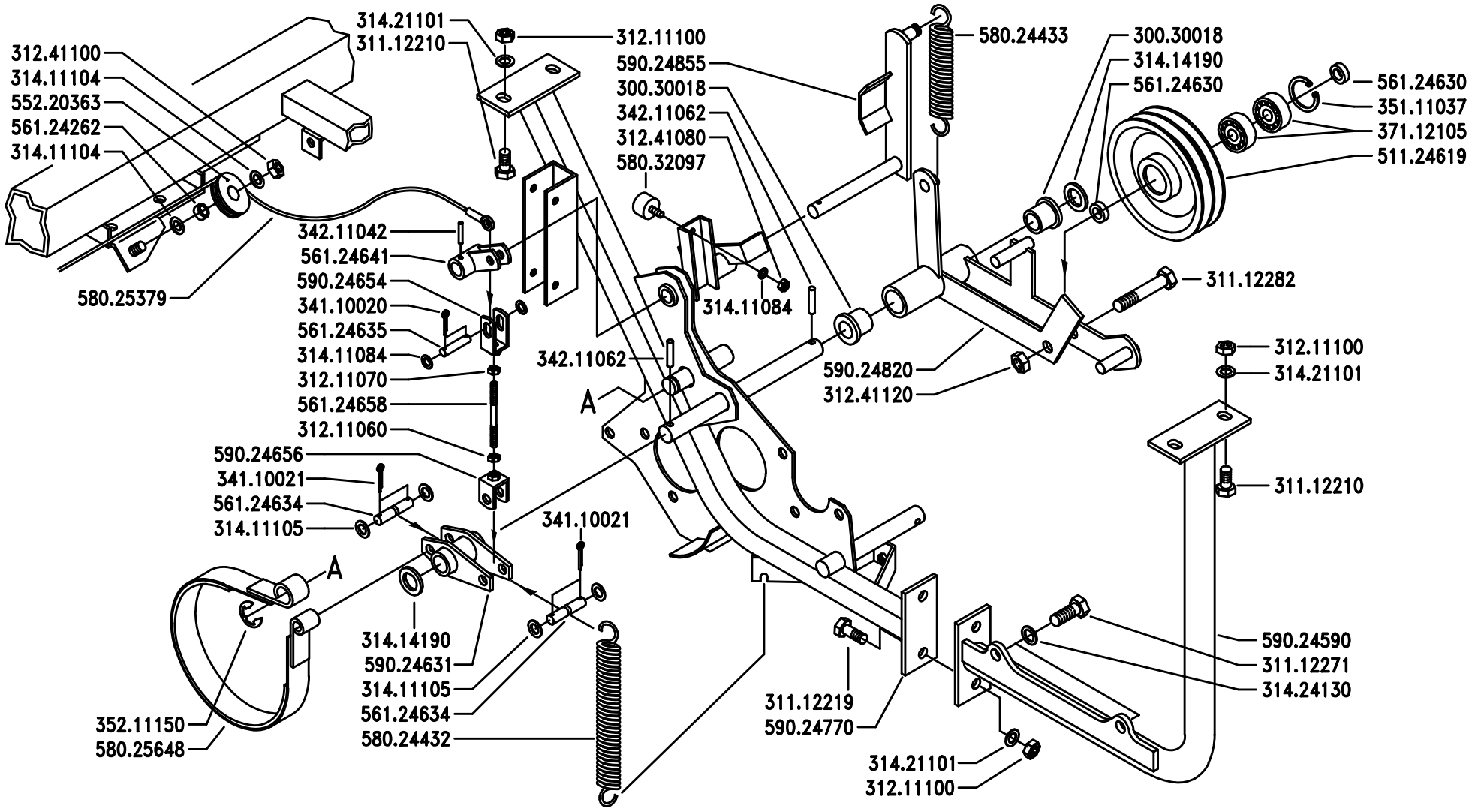

BCS	SERIE MA.TRA	COMANDO PRESA DI FORZA (MT100 – MT104) PTO CONTROL (MT100 – MT104) COMMANDE POUR LA PDF (MT100 – MT104) MANDO DE LA TOMA DE FUERZA (MT100 – MT104) STEUERUNG ZAPFWELLE (MT100 – MT104)	DALLA MACCHINA DE LA MAQUINA DE LA MACHINE FROM THE MACHINE AB DER MASCHINE N.	Sostituisce L02/0 Sostituye L02/0 Remplace L02/0 Replaces L02/0 Ersätzt L02/0	L02 2/199

Pos.	Code	Q.ty	Description	Notes
58025648	58025648	0	BRAKE	
58032097	58032097	0	STOPPER	
59024590	59024590	0	CHASSIS FRAME	
59024631	59024631	0	TRANSMISSION	
59024641	59024641	0	TRANSMISSION	
59024654	59024654	0	U BOLT	
59024656	59024656	0	U BOLT	
59024770	59024770	0	CHASSIS FRAME	
59024820	59024820	0	PULLEY GUIDE	
59024855	59024855	0	STOP	

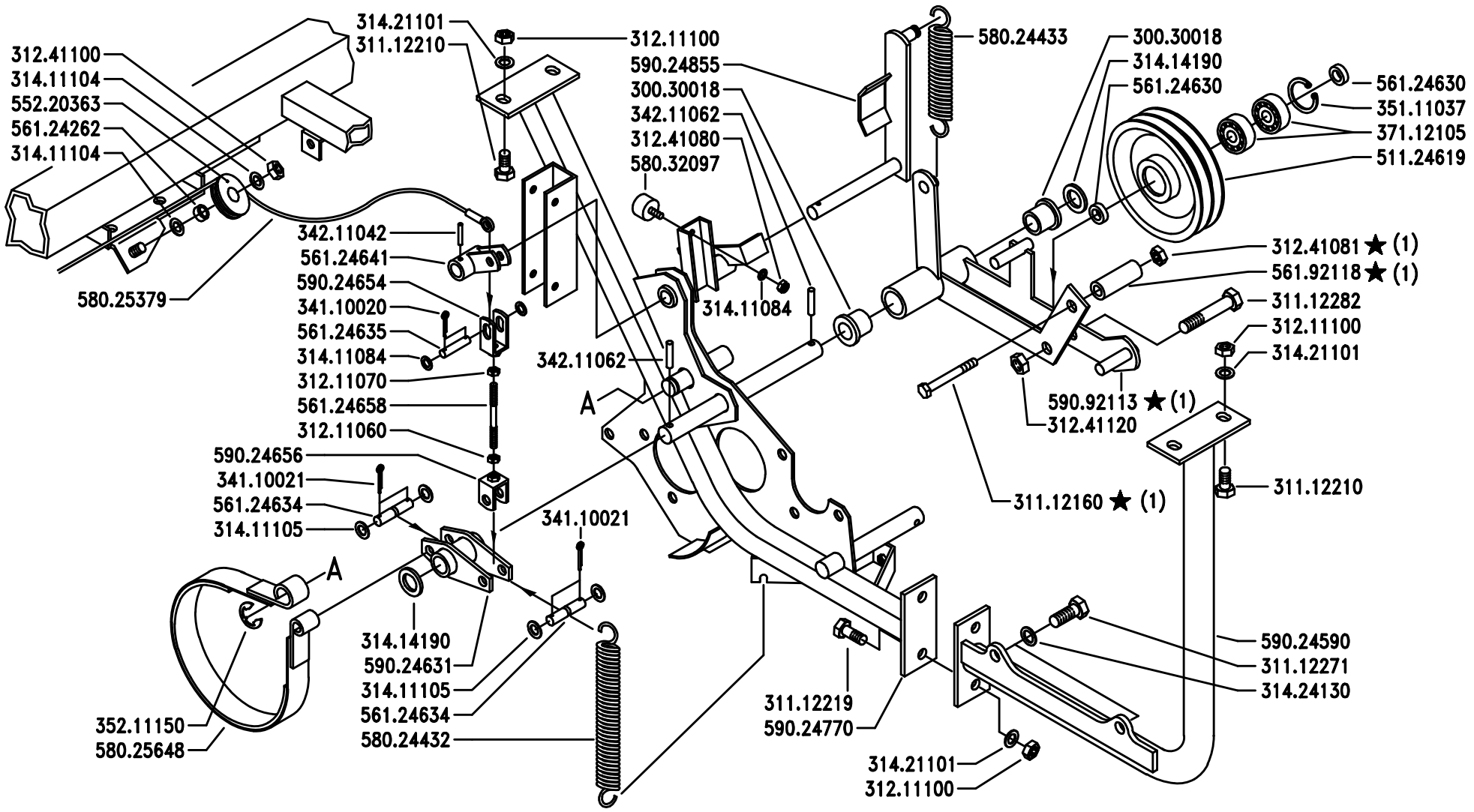

(1) sostituisce 590.24820

BCS	SERIE MA.TRA	COMANDO PRESA DI FORZA (MT100 – MT104) PTO CONTROL (MT100 – MT104) — COMMANDE POUR LA PDF (MT100 – MT104) MANDO DE LA TOMA DE FUERZA (MT100 – MT104) — STEUERUNG ZAPFWELLE (MT100 – MT104)	DALLA MACCHINA DE LA MAQUINA DE LA MACHINE FROM THE MACHINE AB DER MASCHINE ★ N. 1780		L02 6/200

Pos.	Code	Q.ty	Description	Notes
30030018	30030018	0	BUSHING 18x25x25	
31112160	31112160	0	SCREW TE M8X55 UNI 5737 8G	
31112210	31112210	0	SCREW TE M10X20 UNI 5739	
31112219	31112219	0	SCREW TE M10X25 UNI 5739	
31112271	31112271	0	SCREW TE M12X25 UNI 5739	
31112282	31112282	0	SCREW TE M12X65 UNI 5739 8G	
31211060	31211060	0	HEXAGONAL NUT M8	
31211070	31211070	0	NUT M6	
31211100	31211100	0	NUT M10	
31241080	31241080	0	HEXAGON SELFLOCK NUT M8	
31241081	31241081	0	HEXAGON SELFLOCK NUT	
31241100	31241100	0	SELFLOCK HEXAGON NUT M10	
31241120	31241120	0	SELFLOCK NUT M12	
31411084	31411084	0	WASHER 8,4x17	
31411104	31411104	0	WASHER 10,5x18	
31411105	31411105	0	WASHER 10,5x21	
31414190	31414190	0	WASHER 19	
31421101	31421101	0	WASHER	
31424130	31424130	0	PRING WASHER 13	
34110020	34110020	0	SPLIT PIN A2X12 UNI 1336	
34110021	34110021	0	SPLIT PIN A2,0X16 UNI 1336	
34211042	34211042	0	ROLL PIN	
34211062	34211062	0	ROLL PIN	
35111037	35111037	0	SEEGER RING I 37 DIN 472	
35121019	35121019	0	SEEGER RING E 19 DIN 471	
37112105	37112105	0	BEARING 6301-2RS (123712) SKF	
51124619	51124619	0	PULLEY	
55220363	55220363	0	PULLEY	
56124262	56124262	0	SLEEVE	
56124630	56124630	0	SPACER	
56124634	56124634	0	PIN	
56124635	56124635	0	PIN	
56124658	56124658	0	ROD	
56192118	56192118	0	SPACER	

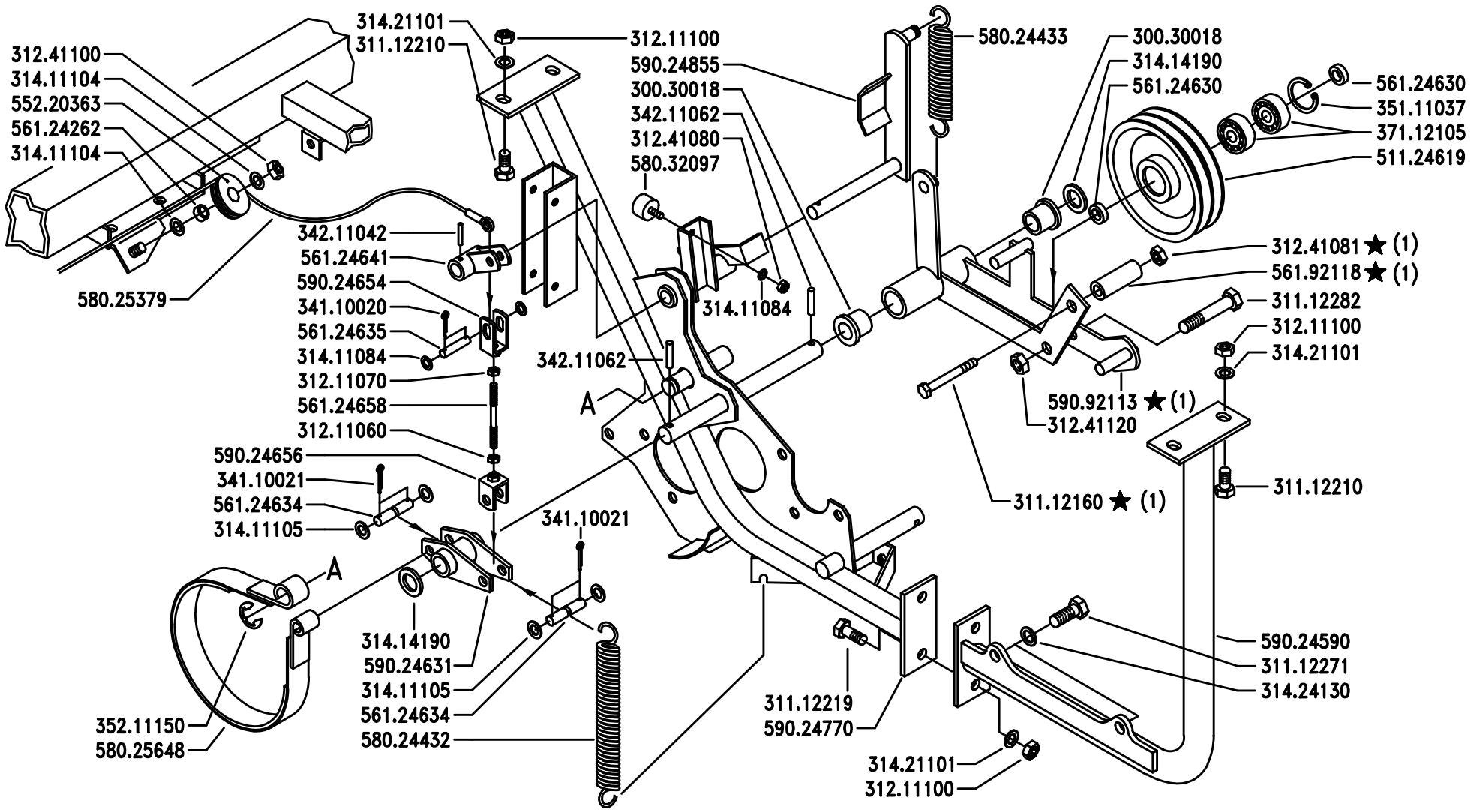

(1) sostituisce 590.24820

BCS	SERIE MA.TRA	COMANDO PRESA DI FORZA (MT100 – MT104) PTO CONTROL (MT100 – MT104) — COMMANDE POUR LA PDF (MT100 – MT104) MANDO DE LA TOMA DE FUERZA (MT100 – MT104) — STEUERUNG ZAPFWELLE (MT100 – MT104)	DALLA MACCHINA DE LA MAQUINA DE LA MACHINE FROM THE MACHINE AB DER MASCHINE ★ N. 1780	L02	6/200

Pos.	Code	Q.ty	Description	Notes
58024432	58024432	0	SPRING	
58024433	58024433	0	PULLEY GUIDE SPRING	
58025379	58025379	0	TRANSMISSION	
58025648	58025648	0	BRAKE	
58032097	58032097	0	STOPPER	
59024590	59024590	0	CHASSIS FRAME	
59024631	59024631	0	TRANSMISSION	
59024641	59024641	0	TRANSMISSION	
59024654	59024654	0	U BOLT	
59024656	59024656	0	U BOLT	
59024770	59024770	0	CHASSIS FRAME	
59024855	59024855	0	STOP	
59092113	59092113	0	PULLEY GUIDE	

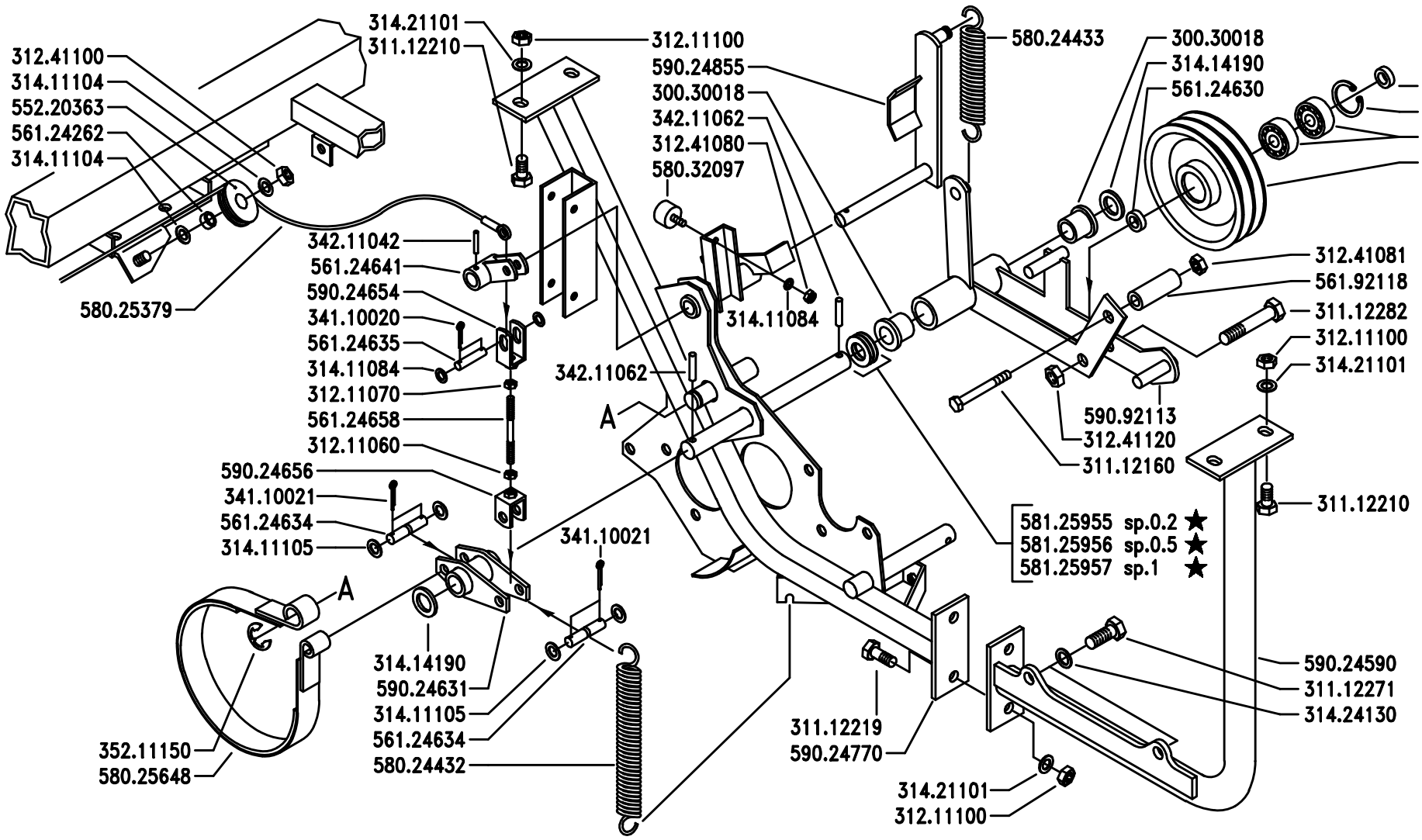

BCS	SERIE MA.TRA	COMANDO PRESA DI FORZA (MT100 – MT104) PTO CONTROL (MT100 – MT104) COMMANDE POUR LA PDF (MT100 – MT104) MANDO DE LA TOMA DE FUERZA (MT100 – MT104) STEUERUNG ZAPFWELLE (MT100 – MT104)	DALLA MACCHINA DE LA MAQUINA DE LA MACHINE FROM THE MACHINE AB DER MASCHINE ★ N.	AGGIORNAMENTO APLAZAMIENTO MISE A JOUR REVISION ANPASSUNG	L02 7/2002

Pos.	Code	Q.ty	Description	Notes
30030018	30030018	0	BUSHING 18x25x25	
31112160	31112160	0	SCREW TE M8X55 UNI 5737 8G	
31112210	31112210	0	SCREW TE M10X20 UNI 5739	
31112219	31112219	0	SCREW TE M10X25 UNI 5739	
31112271	31112271	0	SCREW TE M12X25 UNI 5739	
31112282	31112282	0	SCREW TE M12X65 UNI 5739 8G	
31211060	31211060	0	HEXAGONAL NUT M8	
31211070	31211070	0	NUT M6	
31211100	31211100	0	NUT M10	
31241080	31241080	0	HEXAGON SELFLOCK NUT M8	
31241081	31241081	0	HEXAGON SELFLOCK NUT	
31241100	31241100	0	SELFLOCK HEXAGON NUT M10	
31241120	31241120	0	SELFLOCK NUT M12	
31411084	31411084	0	WASHER 8,4x17	
31411104	31411104	0	WASHER 10,5x18	
31411105	31411105	0	WASHER 10,5x21	
31414190	31414190	0	WASHER 19	
31421101	31421101	0	WASHER	
31424130	31424130	0	PRING WASHER 13	
34110020	34110020	0	SPLIT PIN A2X12 UNI 1336	
34110021	34110021	0	SPLIT PIN A2,0X16 UNI 1336	
34211042	34211042	0	ROLL PIN	
34211062	34211062	0	ROLL PIN	
35111037	35111037	0	SEEGER RING I 37 DIN 472	
35121019	35121019	0	SEEGER RING E 19 DIN 471	
37112105	37112105	0	BEARING 6301-2RS (123712) SKF	
51124619	51124619	0	PULLEY	
55220363	55220363	0	PULLEY	
56124262	56124262	0	SLEEVE	
56124630	56124630	0	SPACER	
56124634	56124634	0	PIN	
56124635	56124635	0	PIN	
56124658	56124658	0	ROD	
56192118	56192118	0	SPACER	

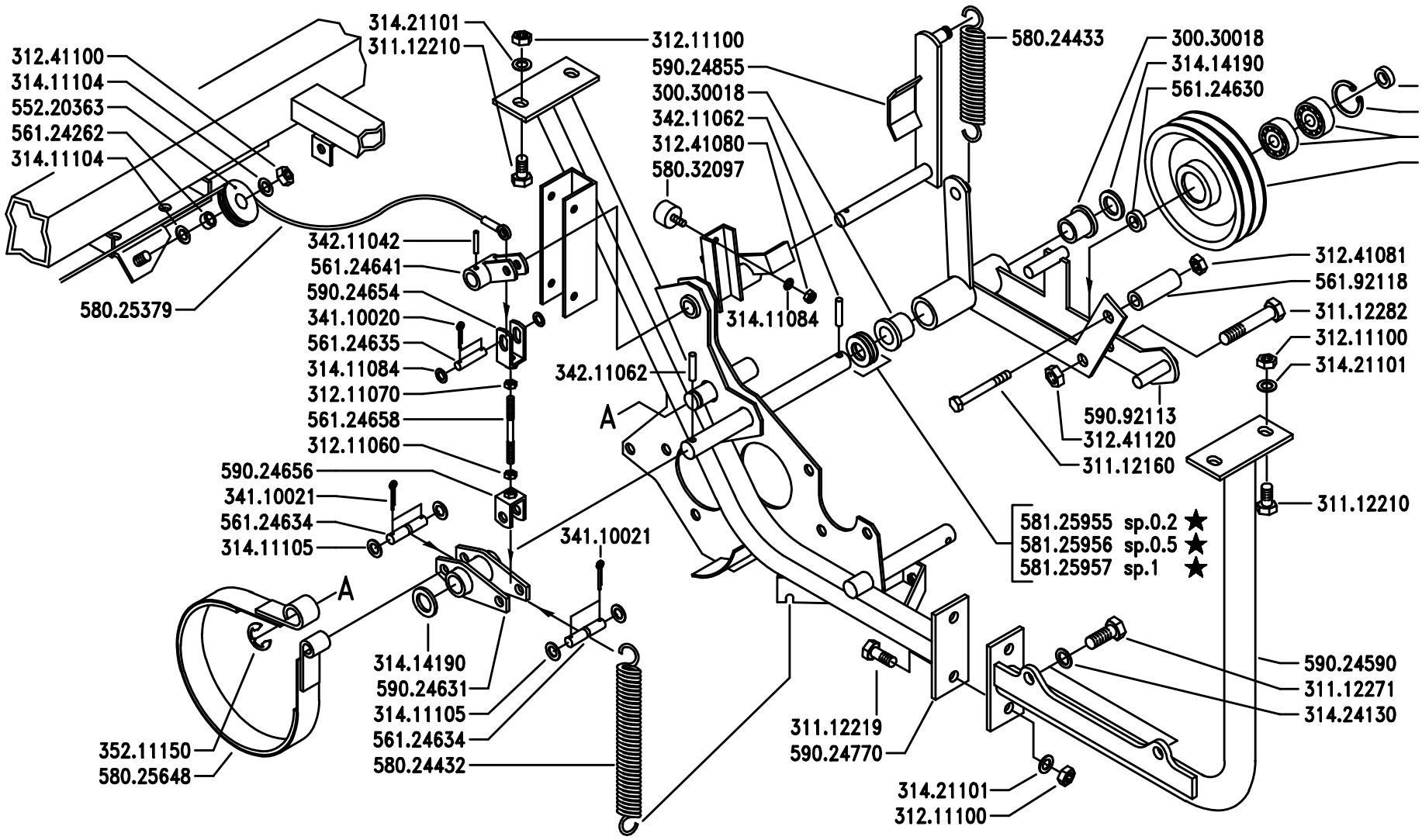

BCS

SERIE

MA.TRA

COMANDO PRESA DI FORZA (MT100 – MT104)

PTO CONTROL (MT100 – MT104)

COMMANDE POUR LA PDF (MT100 – MT104)

MANDO DE LA TOMA DE FUERZA (MT100 – MT104)

STEUERUNG ZAPFWELLE (MT100 – MT104)

DALLA MACCHINA
DE LA MAQUINA
DE LA MACHINE
FROM THE MACHINE
AB DER MASCHINE

★ N.

AGGIORNAMENTO	L02
APLAZAMIENTO	
MISE A JOUR	
REVISION	7/2002
ANPASSUNG	

Pos.	Code	Q.ty	Description	Notes
58024432	58024432	0	SPRING	
58024433	58024433	0	PULLEY GUIDE SPRING	
58025379	58025379	0	TRANSMISSION	
58025648	58025648	0	BRAKE	
58032097	58032097	0	STOPPER	
58125955	58125955	1	SHIM	
58125956	58125956	1	SHIM	
58125957	58125957	1	SHIM	
59024590	59024590	0	CHASSIS FRAME	
59024631	59024631	0	TRANSMISSION	
59024641	59024641	0	TRANSMISSION	
59024654	59024654	0	U BOLT	
59024656	59024656	0	U BOLT	
59024770	59024770	0	CHASSIS FRAME	
59024855	59024855	0	STOP	
59092113	59092113	0	PULLEY GUIDE	

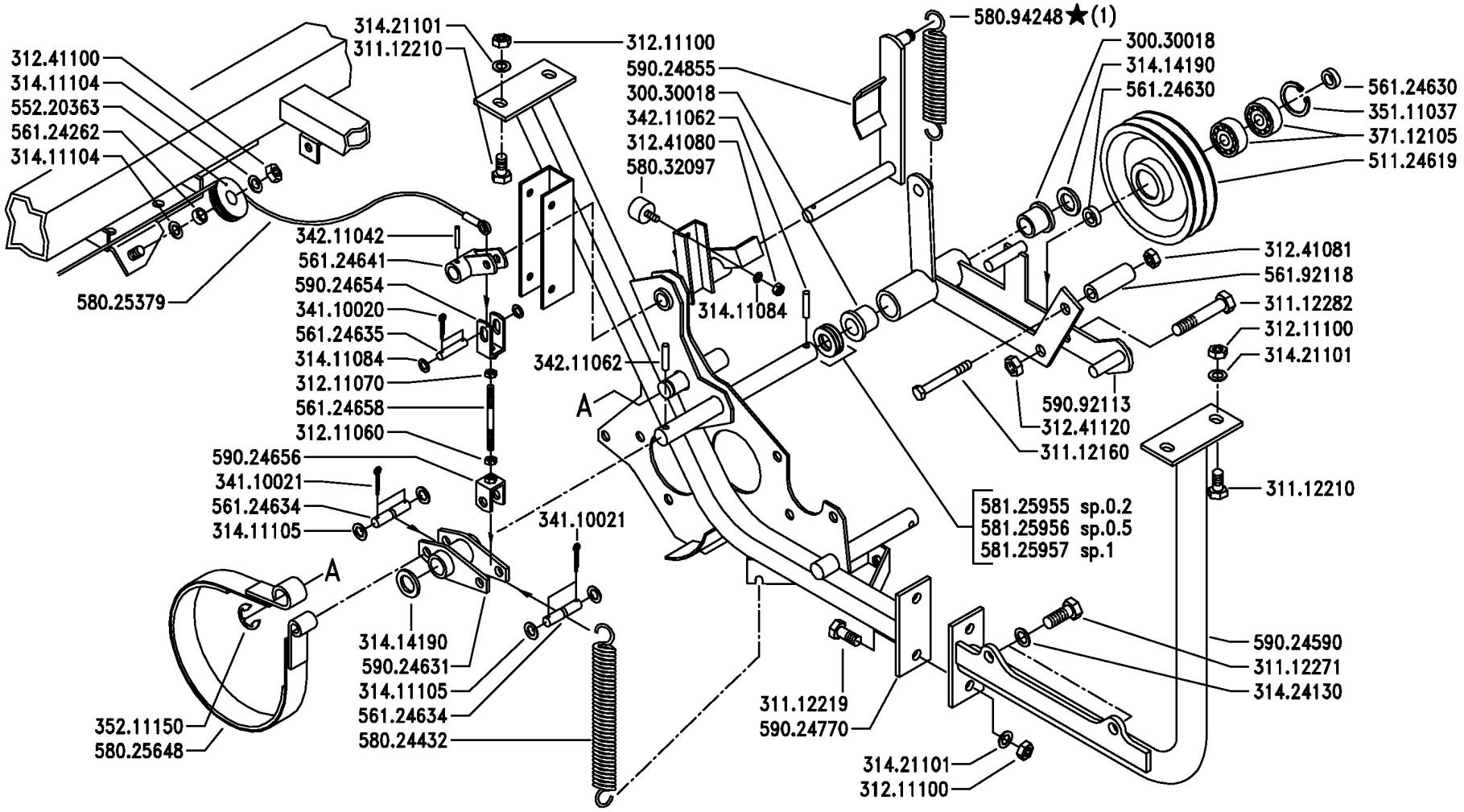

(1) sostituisce 580.24433

BCS	SERIE MA.TRA	COMANDO PRESA DI FORZA (MT100 - MT104) PTO CONTROL (MT100 – MT104) COMMANDE POUR LA PDF (MT100 – MT104) MANDO DE LA TOMA DE FUERZA (MT100 – MT104) STEUERUNG ZAPFWELLE (MT100 – MT104)	DALLA MACCHINA DE LA MAQUINA DE LA MACHINE FROM THE MACHINE AB DER MASCHINE ★N.	AGGIORNAMENTO APLAZAMIENTO MISE A JOUR REVISION ANPASSUNG	L02	Rev. 4
					11/2007	

DITE - BCS 32102T04B

Pos.	Code	Q.ty	Description	Notes
30030018	30030018	1	BUSHING 18x25x25	
31112160	31112160	1	SCREW TE M8X55 UNI 5737 8G	
31112210	31112210	1	SCREW TE M10X20 UNI 5739	
31112219	31112219	1	SCREW TE M10X25 UNI 5739	
31112271	31112271	1	SCREW TE M12X25 UNI 5739	
31112282	31112282	1	SCREW TE M12X65 UNI 5739 8G	
31211060	31211060	1	HEXAGONAL NUT M8	
31211070	31211070	1	NUT M6	
31211100	31211100	1	NUT M10	
31241080	31241080	1	HEXAGON SELFLOCK NUT M8	
31241081	31241081	1	HEXAGON SELFLOCK NUT	
31241100	31241100	1	SELFLOCK HEXAGON NUT M10	
31241120	31241120	1	SELFLOCK NUT M12	
31411084	31411084	1	WASHER 8,4x17	
31411104	31411104	1	WASHER 10,5x18	
31411105	31411105	1	WASHER 10,5x21	
31414190	31414190	1	WASHER 19	
31421101	31421101	1	WASHER	
31424130	31424130	1	PRING WASHER 13	
34110020	34110020	1	SPLIT PIN A2X12 UNI 1336	
34110021	34110021	1	SPLIT PIN A2,0X16 UNI 1336	
34211042	34211042	1	ROLL PIN	
34211062	34211062	1	ROLL PIN	
35111037	35111037	1	SEEGER RING I 37 DIN 472	
35121019	35121019	1	SEEGER RING E 19 DIN 471	
37112105	37112105	1	BEARING 6301-2RS (123712) SKF	
51124619	51124619	1	PULLEY	
55220363	55220363	1	PULLEY	
56124262	56124262	1	SLEEVE	
56124630	56124630	1	SPACER	
56124634	56124634	1	PIN	
56124635	56124635	1	PIN	
56124658	56124658	1	ROD	
56192118	56192118	1	SPACER	

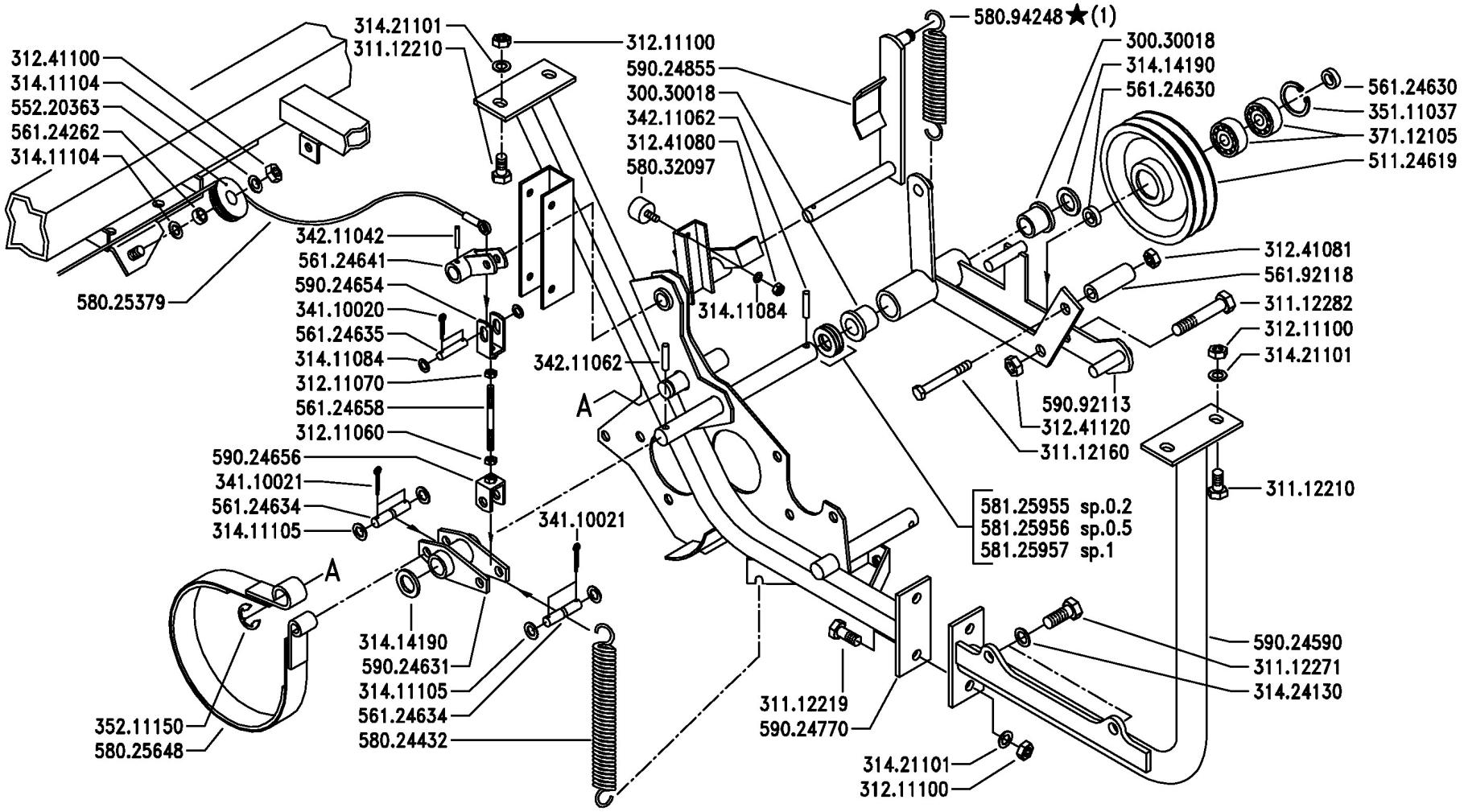

(1) sostituisce 580.24433

BCS	SERIE MA.TRA	COMANDO PRESA DI FORZA (MT100 - MT104) PTO CONTROL (MT100 – MT104) COMMANDE POUR LA PDF (MT100 – MT104) MANDO DE LA TOMA DE FUERZA (MT100 – MT104) STEUERUNG ZAPFWELLE (MT100 – MT104)	DALLA MACCHINA DE LA MAQUINA DE LA MACHINE FROM THE MACHINE AB DER MASCHINE ★N.	AGGIORNAMENTO APLAZAMIENTO MISE A JOUR REVISION ANPASSUNG	L02	Rev. 4
					11/2007	

DITE - BCS 32102T04B

Pos.	Code	Q.ty	Description	Notes
58024432	58024432	1	SPRING	
58025379	58025379	1	TRANSMISSION	
58025648	58025648	1	BRAKE	
58032097	58032097	1	STOPPER	
58094248	58094248	1	PULLEY GUIDE SPRING	
58125955	58125955	1	SHIM	
58125956	58125956	1	SHIM	
58125957	58125957	1	SHIM	
59024590	59024590	1	CHASSIS FRAME	
59024631	59024631	1	TRANSMISSION	
59024641	59024641	1	TRANSMISSION	
59024654	59024654	1	U BOLT	
59024656	59024656	1	U BOLT	
59024770	59024770	1	CHASSIS FRAME	
59024855	59024855	1	STOP	
59092113	59092113	1	PULLEY GUIDE	

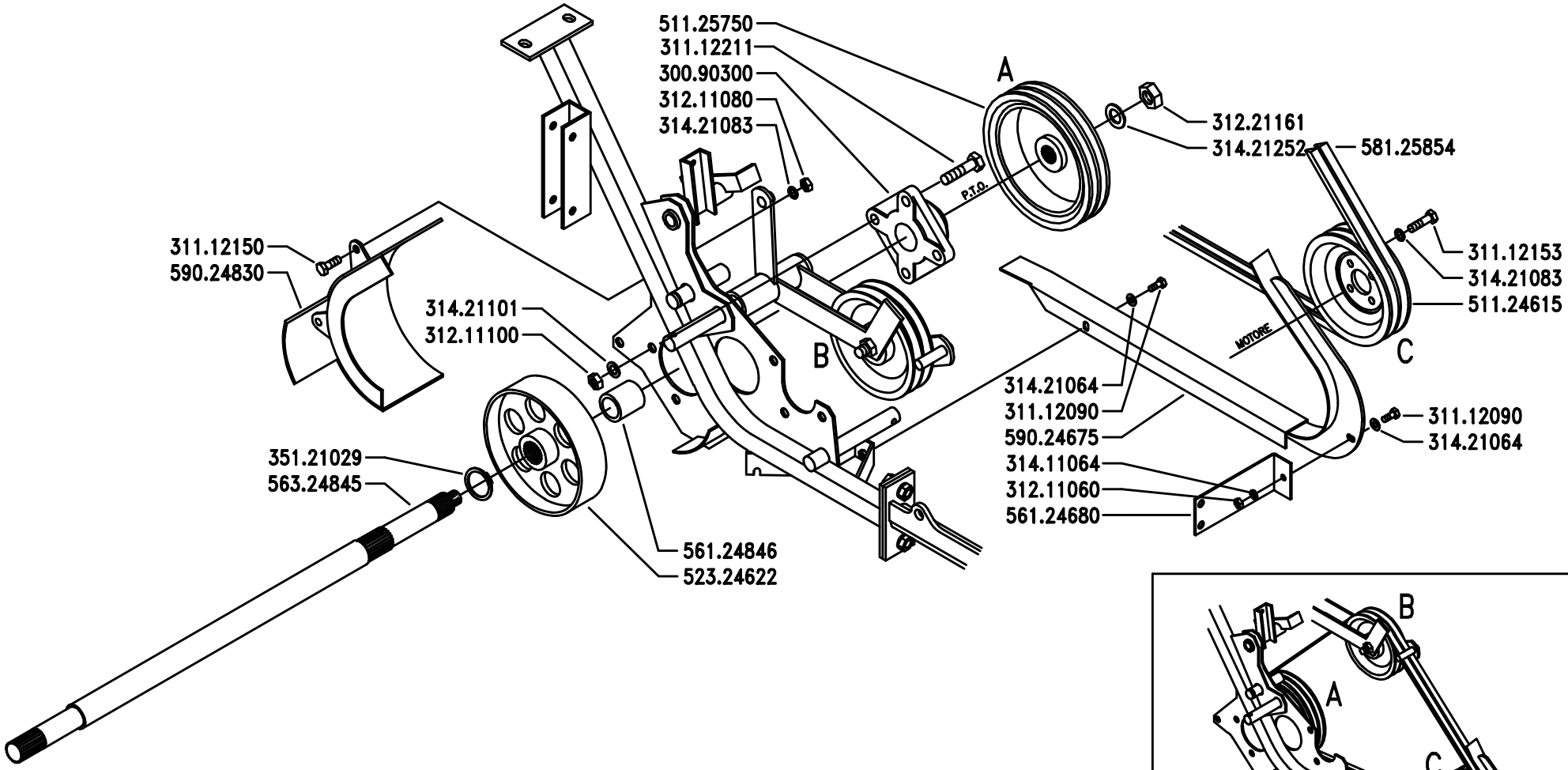

BCS

SERIE

MA.TRA

TRASMISSIONE PRESA DI FORZA (MT100 – MT104)

PTO TRANSMISSION (MT100 – MT104)

CONNEXION DE LA PDF (MT100 – MT104)

TRANSMISIÓN DE LA TOMA DE FURZA (MT100 – MT104)

ANTRIEB ZAPFWELLE (MT100 – MT104)

DALLA MACCHINA
DE LA MAQUINA
DE LA MACHINE
FROM THE MACHINE
AB DER MASCHINE
N.

Sostituisce	L04/0
Sostituye	L04/0
Remplace	L04/0
Replaces	L04/0
Ersätzt	L04/0

L04

Pos.	Code	Q.ty	Description	Notes
30090300	30090300	0	SUPPORT	
31112090	31112090	0	SCREW TE M6X16 UNI 5739 8G	
31112150	31112150	0	SCREW TE M8X20 UNI 5739 8G	
31112153	31112153	0	SCREW TE M8X35 UNI 5739 8G	
31112211	31112211	0	SCREW TE M10X30 UNI 5739	
31211060	31211060	0	HEXAGONAL NUT M8	
31211080	31211080	0	NUT M8	
31211100	31211100	0	NUT M10	
31221161	31221161	0	NUT M16X1,5	
31411064	31411064	0	WASHER 6,4x12,5	
31421064	31421064	0	WASHER	
31421083	31421083	0	WASHER	
31421101	31421101	0	WASHER	
31421252	31421252	0	WASHER	
35121029	35121029	0	SEEGER RING E 29 DIN 471	
51124615	51124615	0	PULLEY	
51125750	51125750	0	PULLEY	
52324622	52324622	0	GEAR	
56124680	56124680	0	SMALL PLATE	
56124846	56124846	0	SPACER	
56324845	56324845	0	CARDAN SHAFT	
58125854	58125854	0	BELT	
59024675	59024675	0	SHOE	
59024830	59024830	0	GUARD	

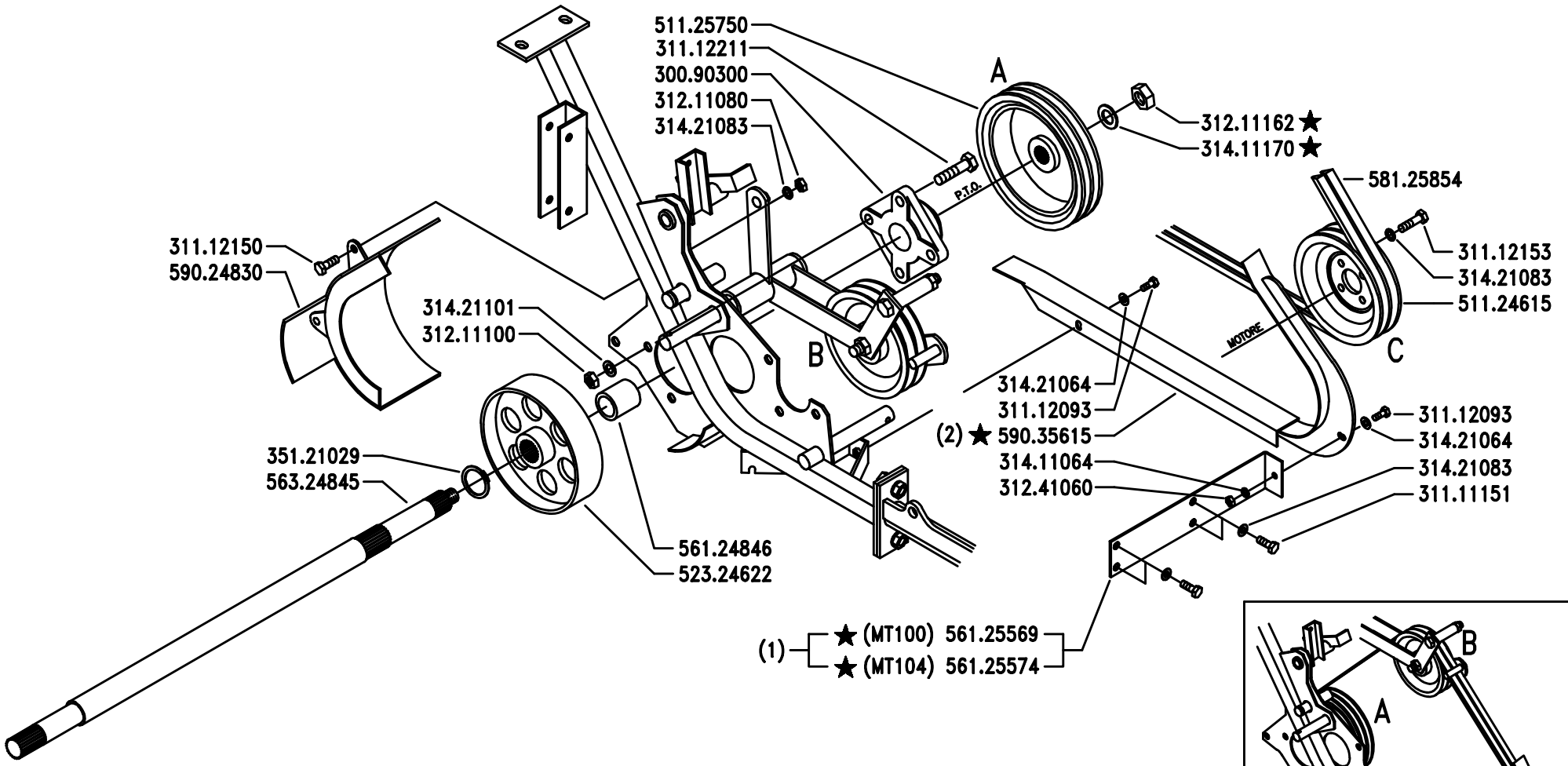

(1) sostituisce 561.24680
(2) sostituisce 590.24675

BCS

SERIE

MA.TRA

TRASMISSIONE PRESA DI FORZA (MT100 – MT104)

PTO TRANSMISSION (MT100 – MT104)

CONNEXION DE LA PDF (MT100 – MT104)

TRANSMISIÓN DE LA TOMA DE FURZA (MT100 – MT104)

ANTRIEB ZAPFWELLE (MT100 – MT104)

DALLA MACCHINA
DE LA MAQUINA
DE LA MACHINE
FROM THE MACHINE
AB DER MASCHINE

★ N.

AGGIORNAMENTO
APLAZAMIENTO
MISE A JOUR
REVISION
ANPASSUNG

L04

3/199

Pos.	Code	Q.ty	Description	Notes
30090300	30090300	0	SUPPORT	
31111151	31111151	0	SCREW TE M8X16 UNI 5739 8G	
31112093	31112093	0	SCREW TE M6X20	
31112150	31112150	0	SCREW TE M8X20 UNI 5739 8G	
31112153	31112153	0	SCREW TE M8X35 UNI 5739 8G	
31112211	31112211	0	SCREW TE M10X30 UNI 5739	
31211080	31211080	0	NUT M8	
31211100	31211100	0	NUT M10	
31221161	31221161	0	NUT M16X1,5	
31241060	31241060	0	HEXAGON SELFLOCK NUT M6	
31411064	31411064	0	WASHER 6,4x12,5	
31421064	31421064	0	WASHER	
31421083	31421083	0	WASHER	
31421101	31421101	0	WASHER	
31421252	31421252	0	WASHER	
35121029	35121029	0	SEEGER RING E 29 DIN 471	
51124615	51124615	0	PULLEY	
51125750	51125750	0	PULLEY	
52324622	52324622	0	GEAR	
56124846	56124846	0	SPACER	
56125569	56125569	0	SMALL PLATE	
56125574	56125574	0	SMALL PLATE	
56324845	56324845	0	CARDAN SHAFT	
58125854	58125854	0	BELT	
59024830	59024830	0	GUARD	
59035615	59035615	0	SHOE	

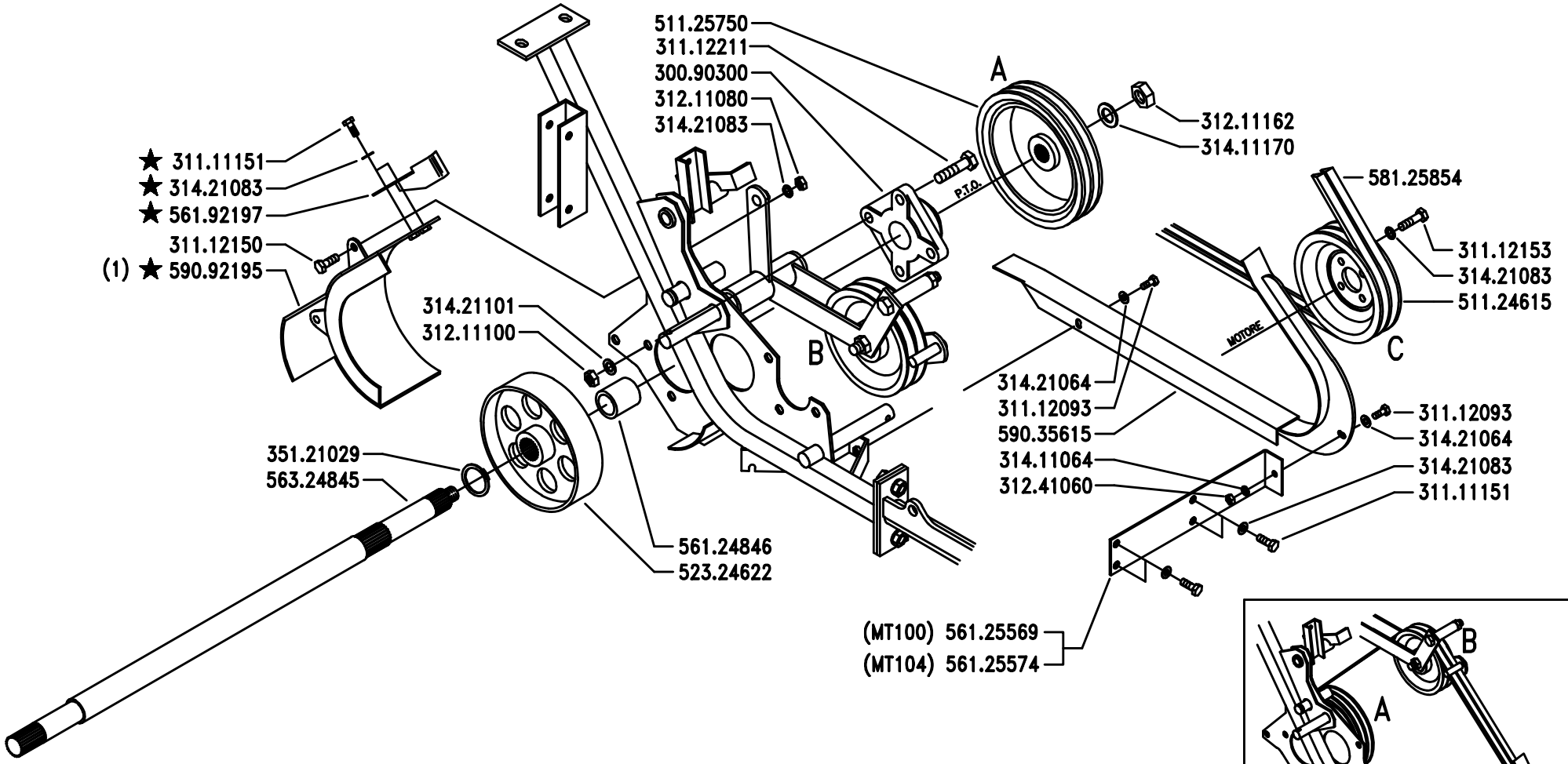

(1) sostituisce 590.24830

BCS

SERIE

MA.TRA

TRASMISSIONE PRESA DI FORZA (MT100 – MT104)

PTO TRANSMISSION (MT100 – MT104)

CONNEXION DE LA PDF (MT100 – MT104)

TRANSMISIÓN DE LA TOMA DE FURZA (MT100 – MT104)

ANTRIEB ZAPFWELLE (MT100 – MT104)

DALLA MACCHINA
DE LA MAQUINA
DE LA MACHINE
FROM THE MACHINE
AB DER MASCHINE

★ N. 1798

L04

7/2002

Pos.	Code	Q.ty	Description	Notes
30090300	30090300	0	SUPPORT	
31111151	31111151	0	SCREW TE M8X16 UNI 5739 8G	
31112093	31112093	0	SCREW TE M6X20	
31112150	31112150	0	SCREW TE M8X20 UNI 5739 8G	
31112153	31112153	0	SCREW TE M8X35 UNI 5739 8G	
31112211	31112211	0	SCREW TE M10X30 UNI 5739	
31211080	31211080	0	NUT M8	
31211100	31211100	0	NUT M10	
31221161	31221161	0	NUT M16X1,5	
31241060	31241060	0	HEXAGON SELFLOCK NUT M6	
31411064	31411064	0	WASHER 6,4x12,5	
31411170	31411170	1	WASHER 17x30	
31421064	31421064	0	WASHER	
31421083	31421083	0	WASHER	
31421101	31421101	0	WASHER	
35121029	35121029	0	SEEGER RING E 29 DIN 471	
51124615	51124615	0	PULLEY	
51125750	51125750	0	PULLEY	
52324622	52324622	0	GEAR	
56124846	56124846	0	SPACER	
56125569	56125569	0	SMALL PLATE	
56125574	56125574	0	SMALL PLATE	
56192197	56192197	1	SHOE	
56324845	56324845	0	CARDAN SHAFT	
58125854	58125854	0	BELT	
59035615	59035615	0	SHOE	
59092195	59092195	1	GUARD	

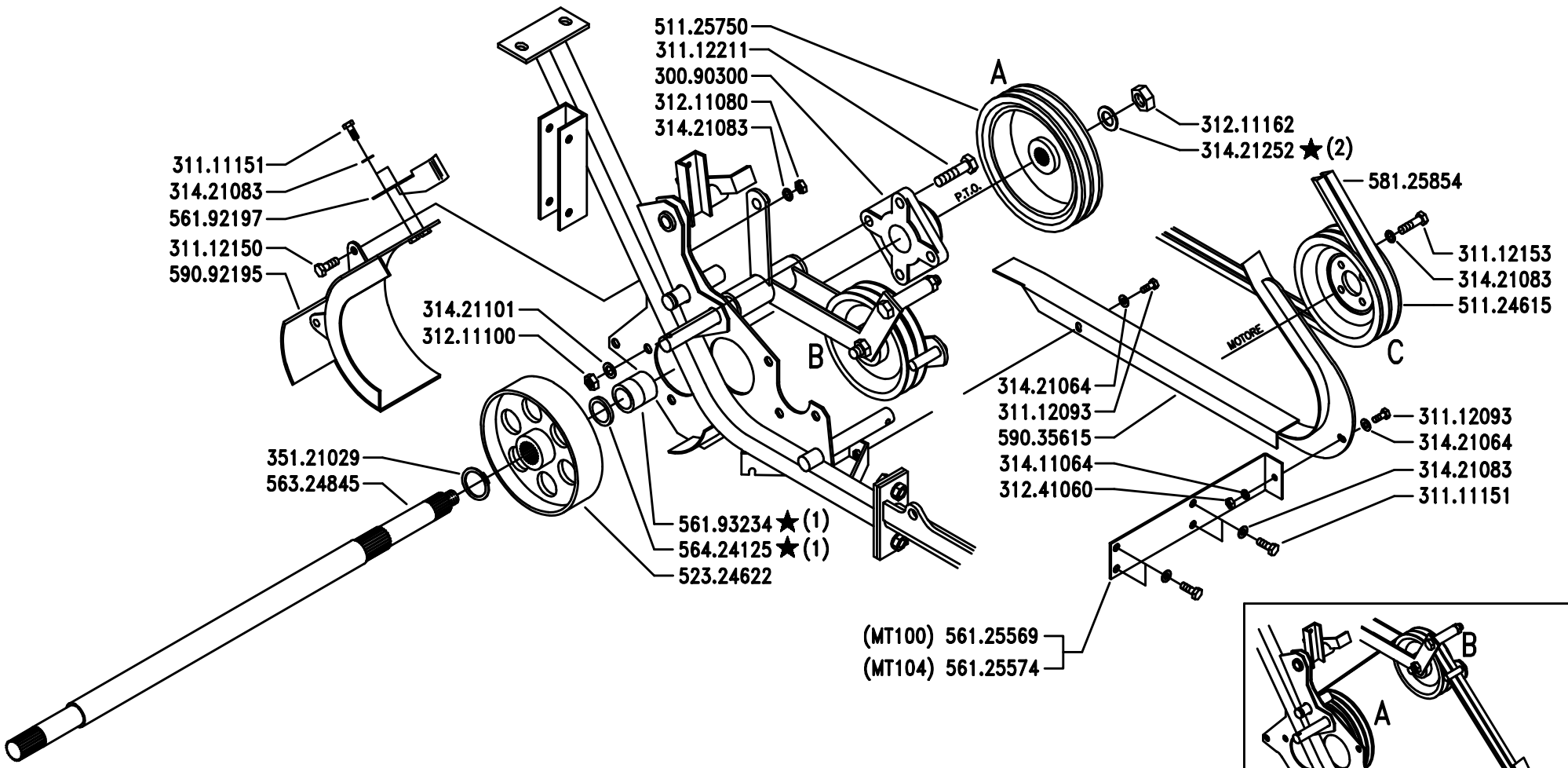

(1) sostituisce 561.24846

(2) sostituisce 314.11170

BCS

SERIE

MA.TRA

TRASMISSIONE PRESA DI FORZA (MT100 – MT104)

PTO TRANSMISSION (MT100 – MT104)

CONNEXION DE LA PDF (MT100 – MT104)

TRANSMISIÓN DE LA TOMA DE FURZA (MT100 – MT104)

ANTRIEB ZAPFWELLE (MT100 – MT104)

DALLA MACCHINA
DE LA MAQUINA
DE LA MACHINE
FROM THE MACHINE
AB DER MASCHINE

★ N. 734756

L04

11/200

Pos.	Code	Q.ty	Description	Notes
30090300	30090300	0	SUPPORT	
31111151	31111151	0	SCREW TE M8X16 UNI 5739 8G	
31112093	31112093	0	SCREW TE M6X20	
31112150	31112150	0	SCREW TE M8X20 UNI 5739 8G	
31112153	31112153	0	SCREW TE M8X35 UNI 5739 8G	
31112211	31112211	0	SCREW TE M10X30 UNI 5739	
31211080	31211080	0	NUT M8	
31211100	31211100	0	NUT M10	
31221161	31221161	0	NUT M16X1,5	
31241060	31241060	0	HEXAGON SELFLOCK NUT M6	
31411064	31411064	0	WASHER 6,4x12,5	
31421064	31421064	0	WASHER	
31421083	31421083	0	WASHER	
31421101	31421101	0	WASHER	
31421252	31421252	1	WASHER	
35121029	35121029	0	SEEGER RING E 29 DIN 471	
51124615	51124615	0	PULLEY	
51125750	51125750	0	PULLEY	
52324622	52324622	0	GEAR	
56125569	56125569	0	SMALL PLATE	
56125574	56125574	0	SMALL PLATE	
56192197	56192197	0	SHOE	
56193234	56193234	1	SPACER	
56324845	56324845	0	CARDAN SHAFT	
56424125	56424125	1	THRUST PLATE	
58125854	58125854	0	BELT	
59035615	59035615	0	SHOE	
59092195	59092195	0	GUARD	

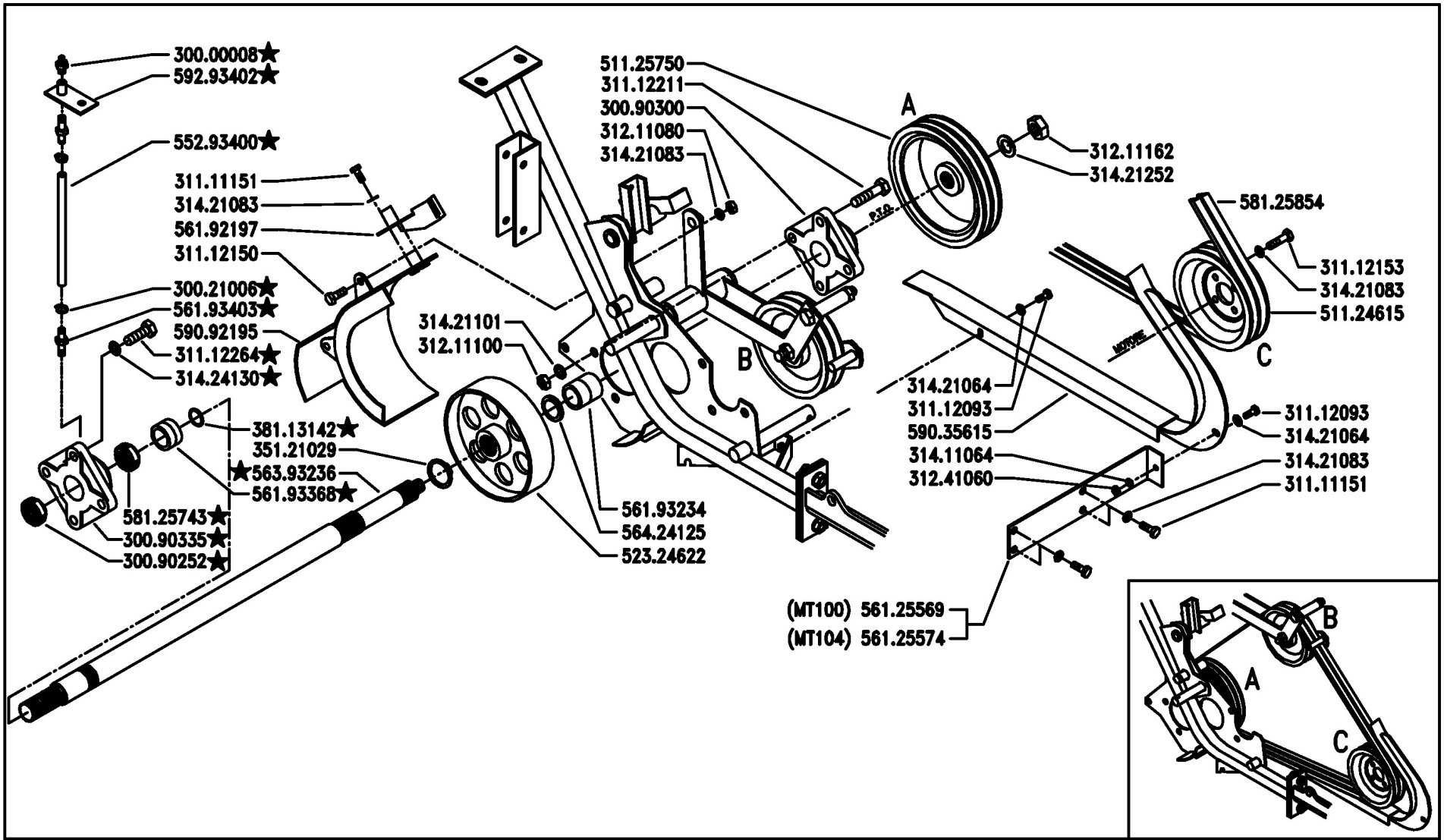

BCS	SERIE MA.TRA	TRASMISSIONE PRESA DI FORZA (MT100 - MT104) PTO TRANSMISSION (MT100 - MT104) CONNEXION DE LA PDF (MT100 - MT104) TRANSMISIÓN DE LA TOMA DE FURZA (MT100 - MT104) ANTRIEB ZAPFWELLE (MT100 - MT104)	DALLA MACCHINA DE LA MAQUINA DE LA MACHINE FROM THE MACHINE AB DER MASCHINE ★ N.	759066	L04 Rev. 5 02/2006

Pos.	Code	Q.ty	Description	Notes
30000008	30000008	1	LUBRICATOR M6x1 CH 7	
30021006	30021006	1	CLAMP 7-11	
30090252	30090252	1	RING NUT M32X1,5	
30090300	30090300	1	SUPPORT	
30090335	30090335	1	SUPPORT	
31111151	31111151	1	SCREW TE M8X16 UNI 5739 8G	
31112093	31112093	1	SCREW TE M6X20	
31112150	31112150	1	SCREW TE M8X20 UNI 5739 8G	
31112153	31112153	1	SCREW TE M8X35 UNI 5739 8G	
31112211	31112211	1	SCREW TE M10X30 UNI 5739	
31112264	31112264	1	SCREW TE M12X35 UNI 5739	
31211080	31211080	1	NUT M8	
31211100	31211100	1	NUT M10	
31211162	31211162	1	SELFLOCK NUT M16X1,5	
31241060	31241060	1	HEXAGON SELFLOCK NUT M6	
31411064	31411064	1	WASHER 6,4x12,5	
31421064	31421064	1	WASHER	
31421083	31421083	1	WASHER	
31421101	31421101	1	WASHER	
31421252	31421252	1	WASHER	
31424130	31424130	1	PRING WASHER 13	
35121029	35121029	1	SEEGER RING E 29 DIN 471	
38113142	38113142	1	O-RING OR 3125 (31,42X2,62)	
51124615	51124615	1	PULLEY	
51125750	51125750	1	PULLEY	
52324622	52324622	1	GEAR	
55293400	55293400	1	TUBE	
56125569	56125569	1	SMALL PLATE	
56125574	56125574	1	SMALL PLATE	
56192197	56192197	1	SHOE	
56193234	56193234	1	SPACER	
56193368	56193368	1	SLEEVE	
56193403	56193403	1	RUBBER HOLDER	
56393236	56393236	1	CONTROL SHAFT	

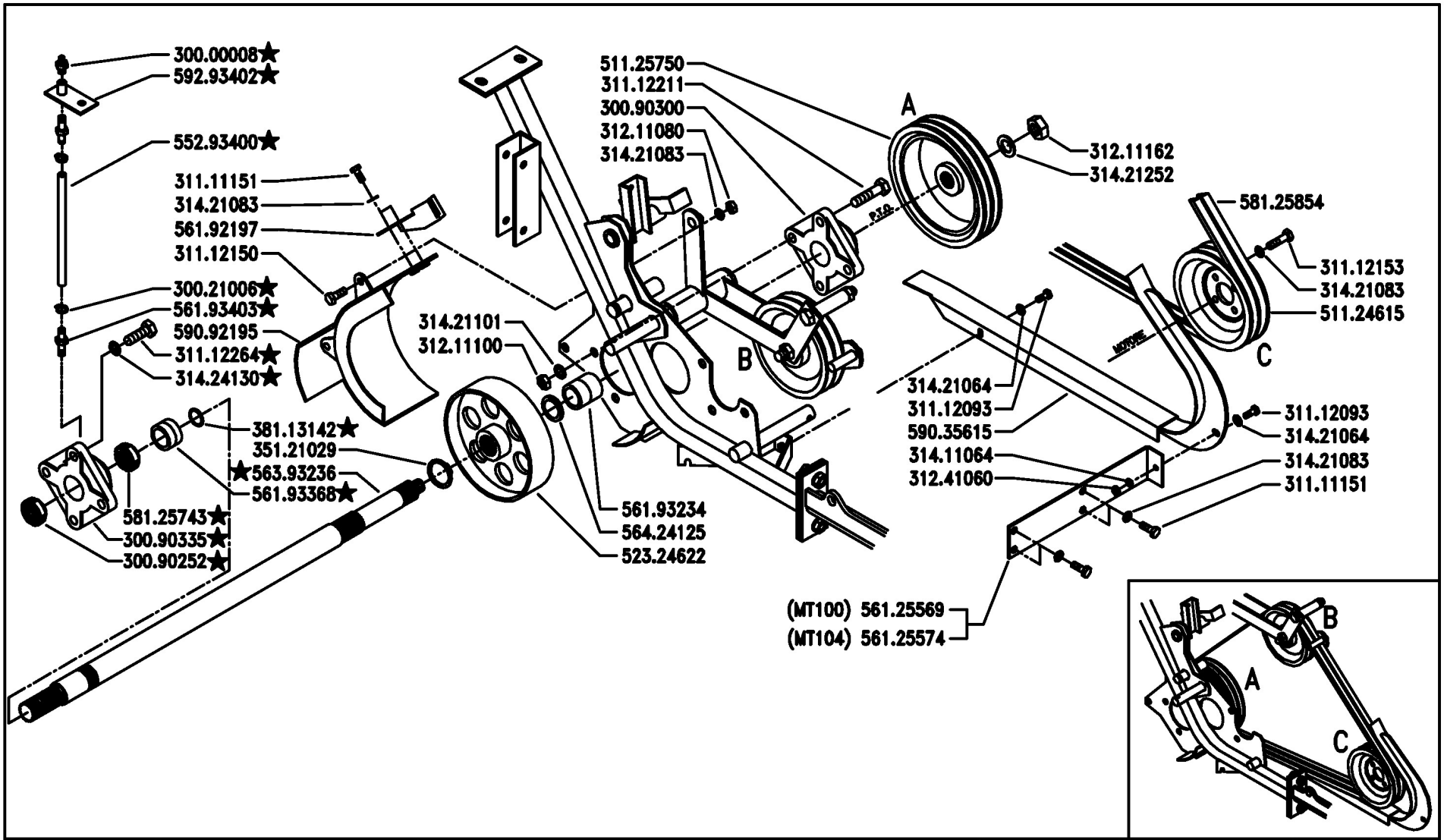

BCS	SERIE MA.TRA	TRASMISSIONE PRESA DI FORZA (MT100 - MT104) PTO TRANSMISSION (MT100 - MT104) CONNEXION DE LA PDF (MT100 - MT104) TRANSMISIÓN DE LA TOMA DE FURZA (MT100 - MT104) ANTRIEB ZAPFWELLE (MT100 - MT104)	DALLA MACCHINA DE LA MAQUINA DE LA MACHINE FROM THE MACHINE AB DER MASCHINE ★ N.	759066	L04 Rev. 5 02/2006

Pos.	Code	Q.ty	Description	Notes
56424125	56424125	1	THRUST PLATE	
58125743	58125743	1	RING NUT	
58125854	58125854	1	BELT	
59035615	59035615	1	SHOE	
59092195	59092195	1	GUARD	
59293402	59293402	1	FIXING PLATE	

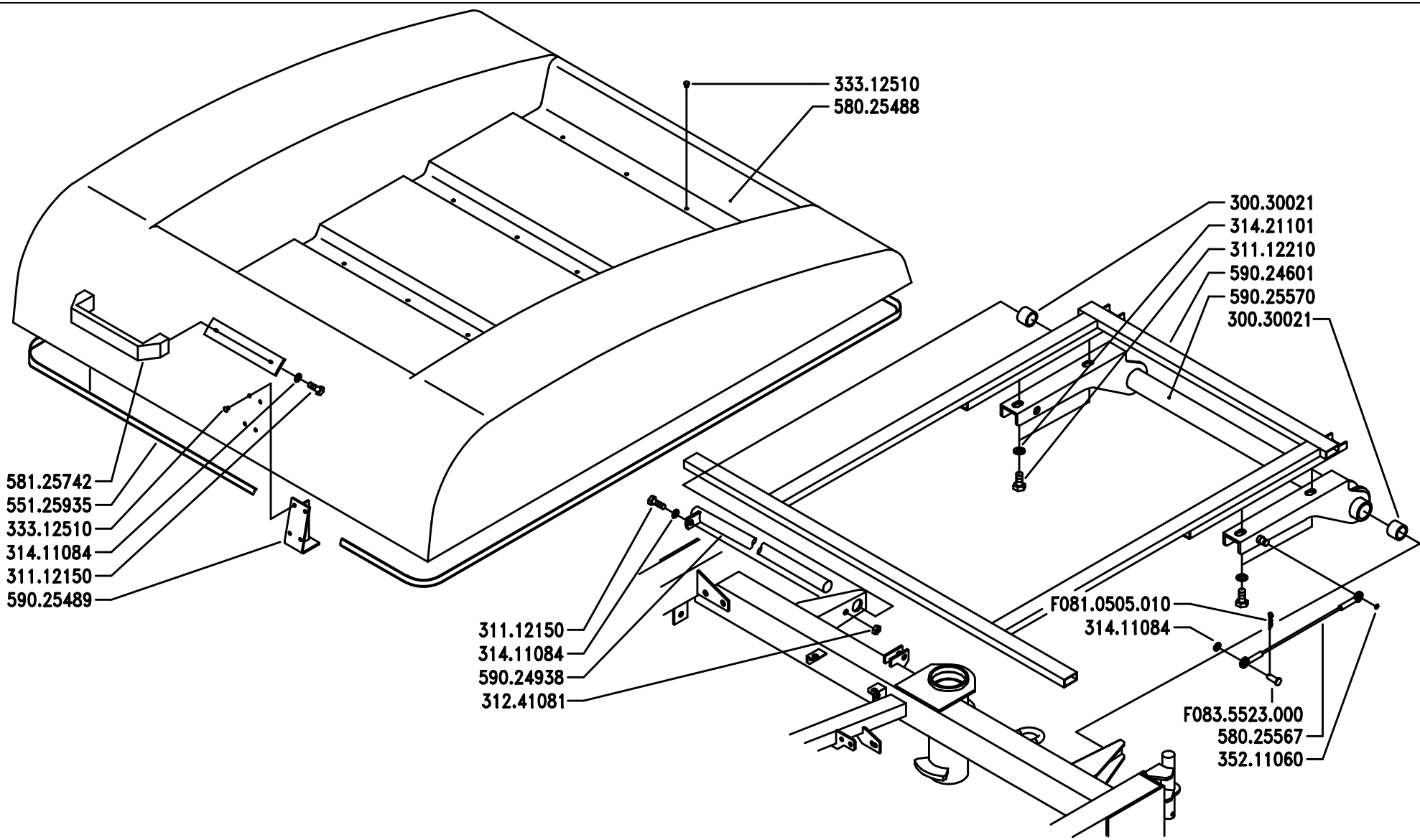

BCS

SERIE

MA.TRA

PIANO DI CARICO (MT104)

LOADING LEVEL (MT104)

PLATEAU DE CHARGEMENT (MT104)

SUPERFICIE DE CARGA (MT104)

LADEFLÄCHE (MT104)

DALLA MACCHINA
DE LA MAQUINA
DE LA MACHINE
FROM THE MACHINE
AB DER MASCHINE

N.

M07

2/199

Pos.	Code	Q.ty	Description	Notes
30030021	30030021	0	BUSHING 20X26X20	
31112150	31112150	0	SCREW TE M8X20 UNI 5739 8G	
31112210	31112210	0	SCREW TE M10X20 UNI 5739	
31241081	31241081	0	HEXAGON SELFLOCK NUT	
31411084	31411084	0	WASHER 8,4x17	
31421101	31421101	0	WASHER	
33312510	33312510	0	RIVET 4,8X16	
35211060	35211060	0	SEEGER RING E 6 UNI 7434	
55125935	55125935	0	GASKET	
58025488	58025488	0	PLATFORM	
58025567	58025567	0	RUBBER-COATED CABLE	
58125742	58125742	0	HANDLE	
59024601	59024601	0	CHASSIS FRAME	
59024938	59024938	0	HINGE PIN	
59025489	59025489	0	FERMO DI CHIUSURA C.TO	
59025570	59025570	0	CONNECTION	
F0810505	F0810505010	0	SPLIT PIN A2,0X201336	
F0835523	F0835523000	0	PIN	

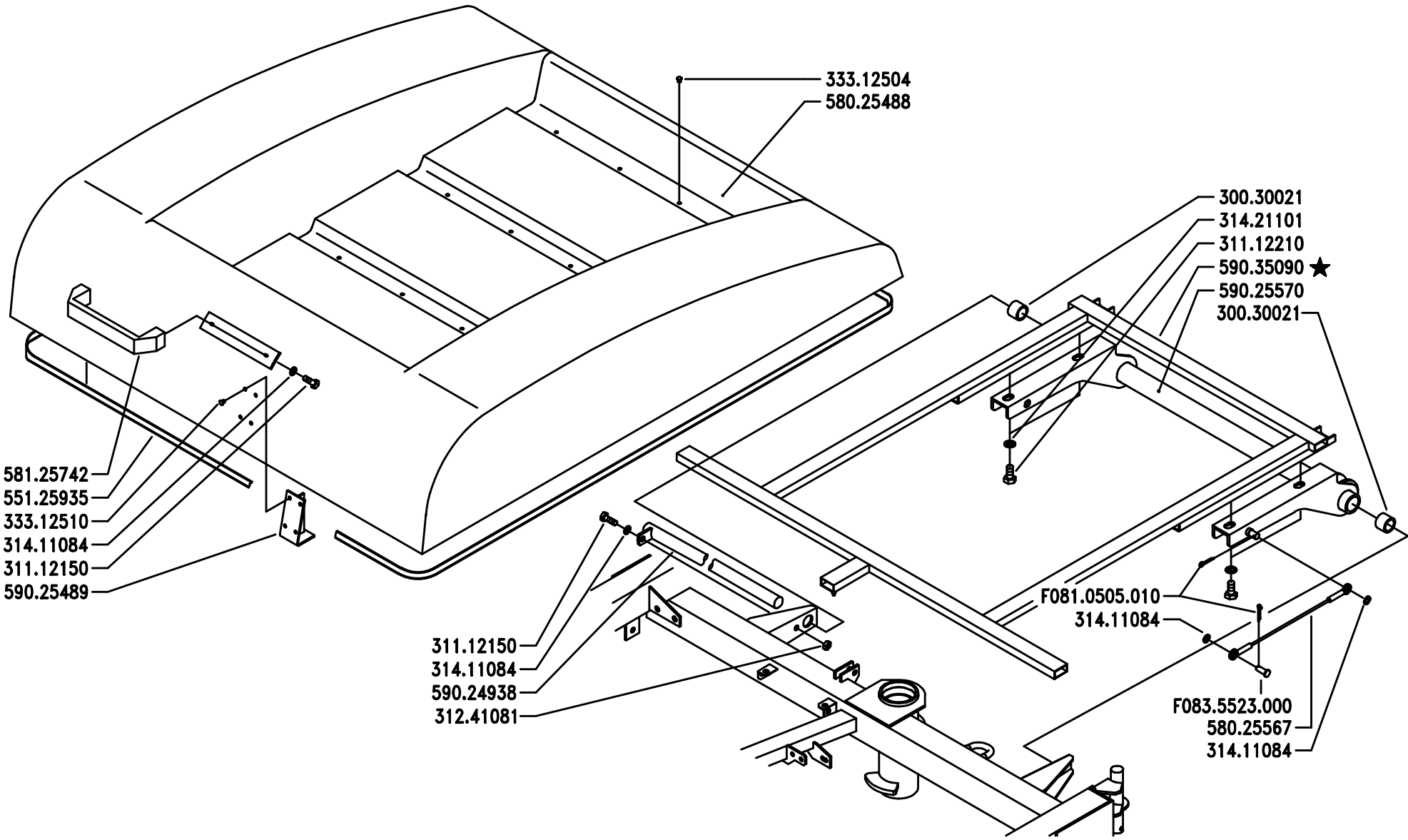

BCS

SERIE

MA.TRA

PIANO DI CARICO (MT104)

LOADING LEVEL (MT104)

PLATEAU DE CHARGEMENT (MT104)

SUPERFICIE DE CARGA (MT104)

LADEFLÄCHE (MT104)

DALLA MACCHINA
DE LA MAQUINA
DE LA MACHINE
FROM THE MACHINE
AB DER MASCHINE

★ N. 1030

M07

3/199

Pos.	Code	Q.ty	Description	Notes
30030021	30030021	0	BUSHING 20X26X20	
31112150	31112150	0	SCREW TE M8X20 UNI 5739 8G	
31112210	31112210	0	SCREW TE M10X20 UNI 5739	
31241081	31241081	0	HEXAGON SELFLOCK NUT	
31411084	31411084	0	WASHER 8,4x17	
31421101	31421101	0	WASHER	
33312510	33312510	0	RIVET 4,8X16	
55125935	55125935	0	GASKET	
58025488	58025488	0	PLATFORM	
58025567	58025567	0	RUBBER-COATED CABLE	
58125742	58125742	0	HANDLE	
59024938	59024938	0	HINGE PIN	
59025489	59025489	0	FERMO DI CHIUSURA C.TO	
59025570	59025570	0	CONNECTION	
59035090	59035090	0	CHASSIS FRAME	
F0810505	F0810505010	0	SPLIT PIN A2,0X201336	
F0835523	F0835523000	0	PIN	

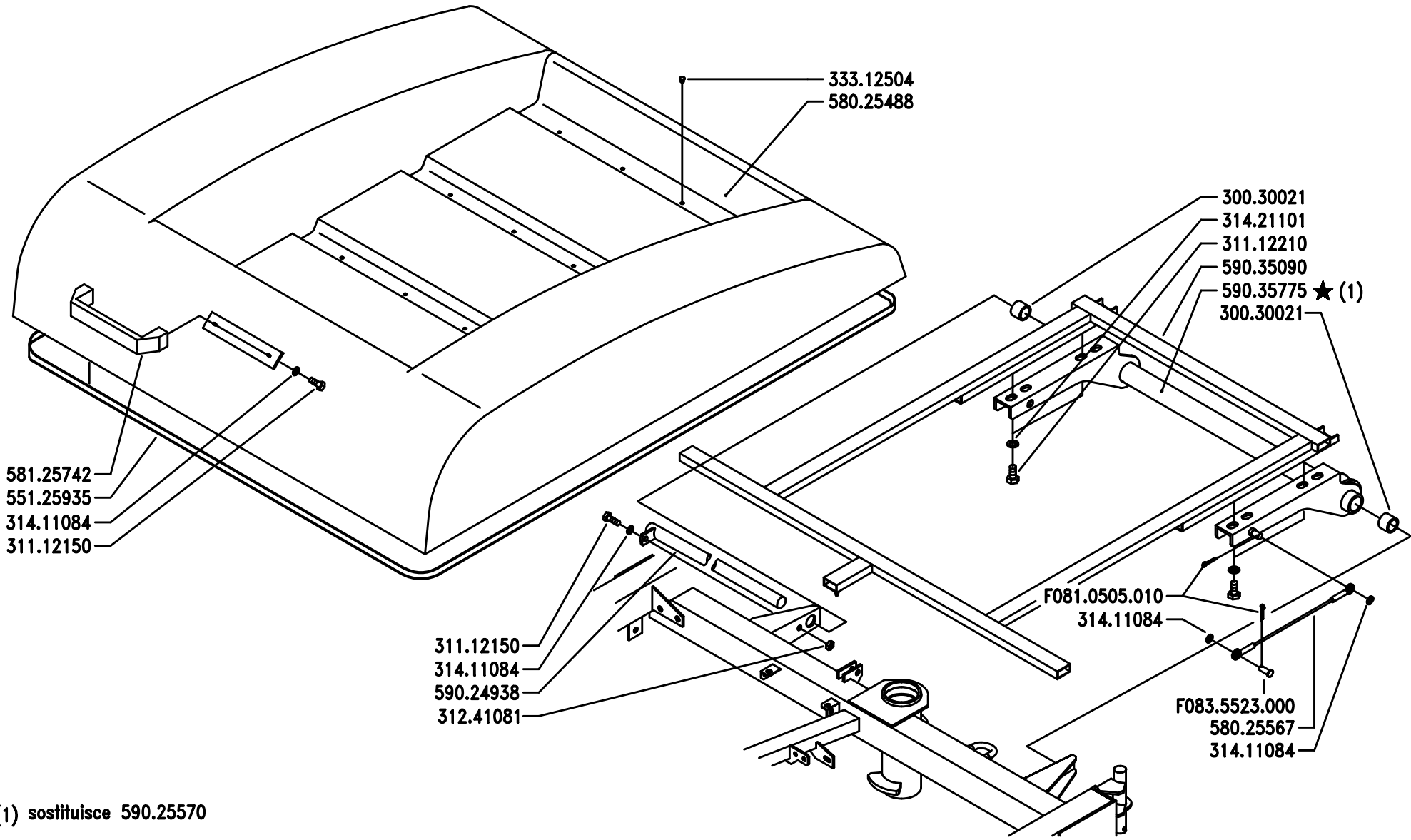

(1) sostituisce 590.25570

BCS

SERIE

MA.TRA

PIANO DI CARICO (MT104)

LOADING LEVEL (MT104)

PLATEAU DE CHARGEMENT (MT104)

SUPERFICIE DE CARGA (MT104)

LADEFLÄCHE (MT104)

DALLA MACCHINA
DE LA MAQUINA
DE LA MACHINE
FROM THE MACHINE
AB DER MASCHINE

★ N. 1408

M07

10/200

Pos.	Code	Q.ty	Description	Notes
30030021	30030021	0	BUSHING 20X26X20	
31112150	31112150	0	SCREW TE M8X20 UNI 5739 8G	
31112210	31112210	0	SCREW TE M10X20 UNI 5739	
31241081	31241081	0	HEXAGON SELFLOCK NUT	
31411084	31411084	0	WASHER 8,4x17	
31421101	31421101	0	WASHER	
55125935	55125935	0	GASKET	
58025488	58025488	0	PLATFORM	
58025567	58025567	0	RUBBER-COATED CABLE	
58125742	58125742	0	HANDLE	
59024938	59024938	0	HINGE PIN	
59035090	59035090	0	CHASSIS FRAME	
59035775	59035775	0	CONNECTION	
F0810505	F0810505010	0	SPLIT PIN A2,0X201336	
F0835523	F0835523000	0	PIN	

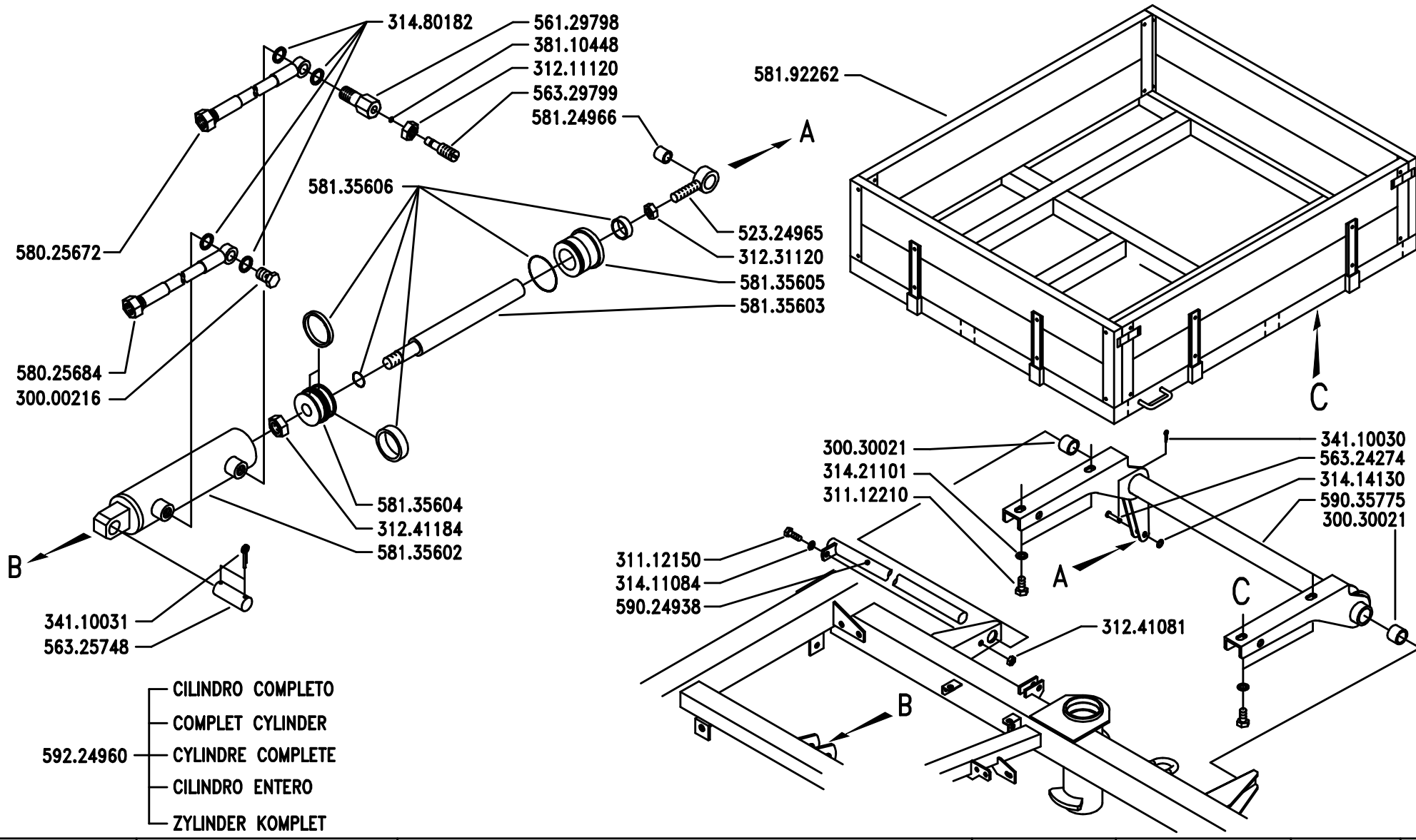

BCS

SERIE

MA.TRA

CASSONETTO RIBALTABILE (MT104)

DUMP BODY (MT104)

CAISSON RABATTABLE (MT104)

CAJA CON ELEVACIÓN MANUAL (MT104)

KLAPPBARER TRANSPORKASTEN (MT104)

DALLA MACCHINA
DE LA MAQUINA
DE LA MACHINE
FROM THE MACHINE
AB DER MASCHINE

★N. 1812

M07

10/200

Pos.	Code	Q.ty	Description	Notes
30000216	30000216	0	SCREW M14X1,5	
30030021	30030021	0	BUSHING 20X26X20	
31112150	31112150	0	SCREW TE M8X20 UNI 5739 8G	
31112210	31112210	0	SCREW TE M10X20 UNI 5739	
31211120	31211120	0	NUT M12 UNI 5588 6S	
31231120	31231120	0	NUT M12 UNI 5589 6S	
31241081	31241081	0	HEXAGON SELFLOCK NUT	
31241184	31241184	0	SELFLOCK NUT M20X1,5	
31411084	31411084	0	WASHER 8,4x17	
31414130	31414130	0	WASHER 13	
31421101	31421101	0	WASHER	
31480182	31480182	0	COPPER WASHER 14	
34110030	34110030	0	SPLIT PIN A3X20 UNI 1336	
34110031	34110031	0	SPLIT PIN A3X30 UNI 1336	
38110448	38110448	0	O-RING OR 2018 (4,48X1,78)	
52324965	52324965	0	EYELET	
56129798	56129798	0	PIPE FITTING	
56324274	56324274	0	PIN	
56325748	56325748	0	PIN	
56329799	56329799	0	ADJUSTING SCREW	
58025672	58025672	0	DISTRIBUTING PIPE	
58025684	58025684	0	PIPE	
58124966	58124966	0	BUSHING	
58135602	58135602	0	BODY	
58135603	58135603	0	STEM	
58135604	58135604	0	PISTON	
58135605	58135605	0	HEAD	
58135606	58135606	0	UNIT	
58192262	58192262	0	LARGE BOX	
59024938	59024938	0	HINGE PIN	
59035775	59035775	0	CONNECTION	
59224960	59224960	0	CYLINDER	

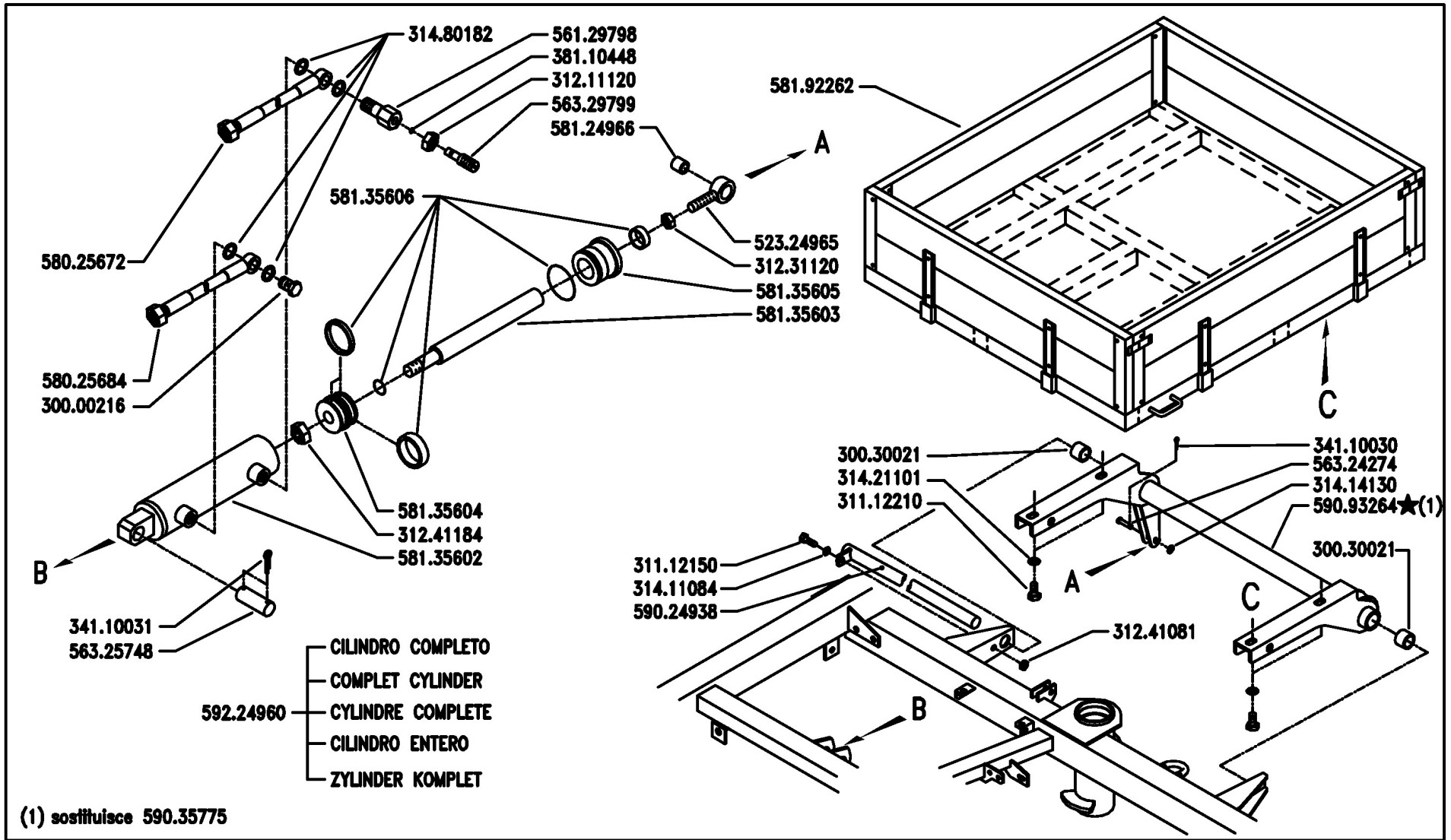

BCS	SERIE MA.TRA	CASSONETTO RIBALTABILE (MT104) DUMP BODY (MT104) CAISSON RABATTABLE (MT104) CAJA CON ELEVACIÓN MANUAL (MT104) KLAPPBARER TRANSPORKASTEN (MT104)	DALLA MACCHINA DE LA MAQUINA DE LA MACHINE FROM THE MACHINE AB DER MASCHINE ★N.	AGGIORNAMENTO APLAZAMIENTO MISE A JOUR REVISION ANPASSUNG	M07 02/2006	Rev. 4

DITE - BCS 32M07T04R

Pos.	Code	Q.ty	Description	Notes
30000216	30000216	1	SCREW M14X1,5	
30030021	30030021	1	BUSHING 20X26X20	
31112150	31112150	1	SCREW TE M8X20 UNI 5739 8G	
31112210	31112210	1	SCREW TE M10X20 UNI 5739	
31211120	31211120	1	NUT M12 UNI 5588 6S	
31231120	31231120	1	NUT M12 UNI 5589 6S	
31241081	31241081	1	HEXAGON SELFLOCK NUT	
31241184	31241184	1	SELFLOCK NUT M20X1,5	
31411084	31411084	1	WASHER 8,4x17	
31414130	31414130	1	WASHER 13	
31421101	31421101	1	WASHER	
31480182	31480182	1	COPPER WASHER 14	
34110030	34110030	1	SPLIT PIN A3X20 UNI 1336	
34110031	34110031	1	SPLIT PIN A3X30 UNI 1336	
38110448	38110448	1	O-RING OR 2018 (4,48X1,78)	
52324965	52324965	1	EYELET	
56129798	56129798	1	PIPE FITTING	
56324274	56324274	1	PIN	
56325748	56325748	1	PIN	
56329799	56329799	1	ADJUSTING SCREW	
58025672	58025672	1	DISTRIBUTING PIPE	
58025684	58025684	1	PIPE	
58124966	58124966	1	BUSHING	
58135602	58135602	1	BODY	
58135603	58135603	1	STEM	
58135604	58135604	1	PISTON	
58135605	58135605	1	HEAD	
58135606	58135606	1	UNIT	
58192262	58192262	1	LARGE BOX	
59024938	59024938	1	HINGE PIN	
59093264	59093264	1	CONNECTION	
59224960	59224960	1	CYLINDER	

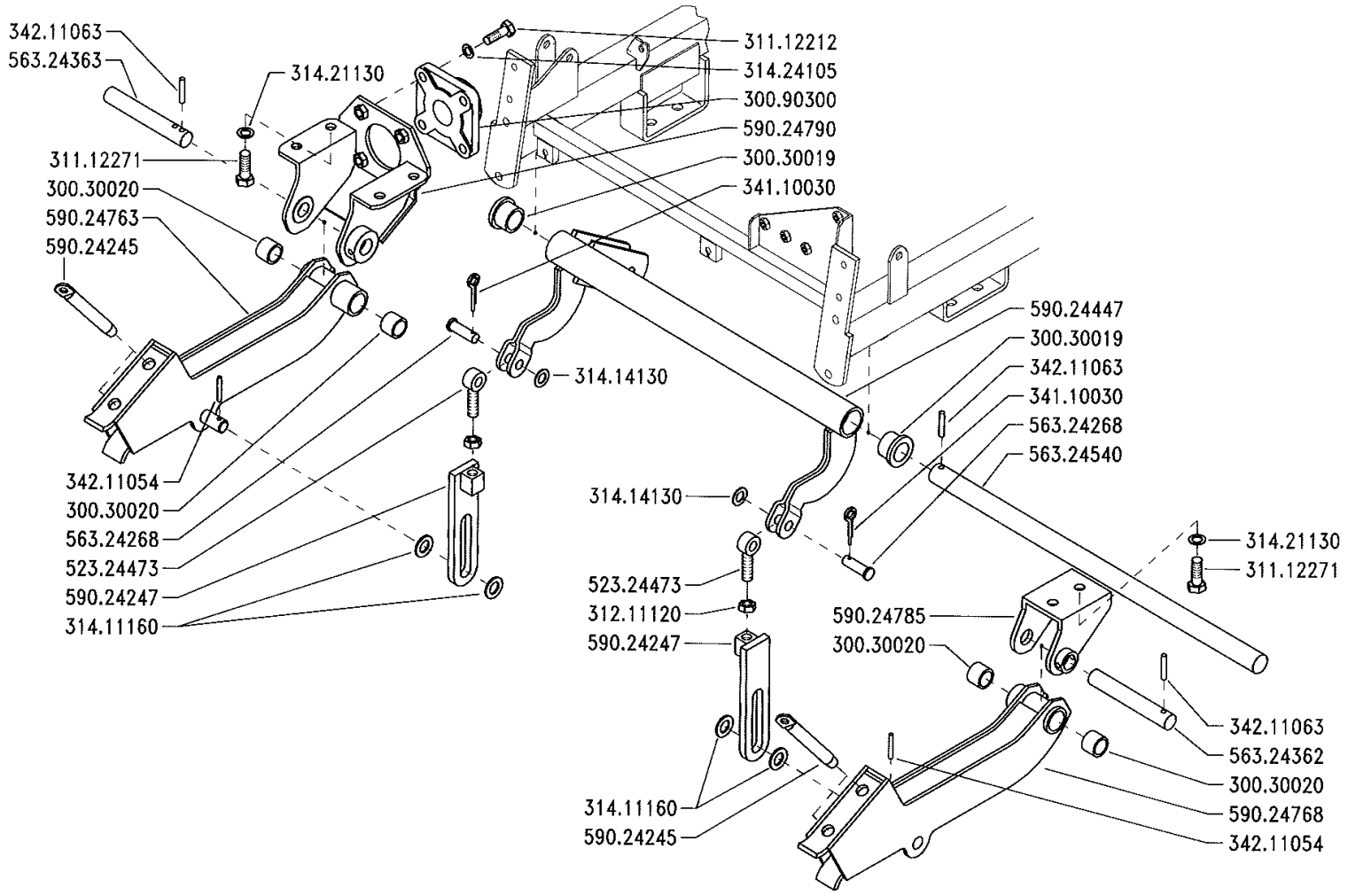

BCS

SERIE

MA.TRA

BRACCI SOLLEVAMENTO ANTERIORE

FRONT RAISING ARMS

BRAZOS DEL IZADO DELANTERO

BRAS DU SOULÈVEMENT ANTÉRIEUR

VORDERE HUBARME

DALLA MACCHINA
DE LA MAQUINA
DE LA MACHINE
FROM THE MACHINE
AB DER MASCHINE

N.

PRODUZIONE 1998	
PRODUCCIÓN 1998	
PRODUCTION 1998	
PRODUCTION 1998	
PRODUKTION 1998	

N01

Mod. 0

1/1999

2ENNE

Pos.	Code	Q.ty	Description	Notes
30030019	30030019	0	BUSHING A/LUB F 25X32X40X25 BR	
30030020	30030020	0	BUSHING 20X26X20	
30090300	30090300	0	SUPPORT	
31112212	31112212	0	SCREW TE M10X35 UNI 5739	
31112271	31112271	0	SCREW TE M12X25 UNI 5739	
31211120	31211120	0	NUT M12 UNI 5588 6S	
31411160	31411160	0	WASHER 16x28/2,5	
31414130	31414130	0	WASHER 13	
31421130	31421130	0	WASHER	
31424105	31424105	0	SPRING WASHER 10,5	
34110030	34110030	0	SPLIT PIN A3X20 UNI 1336	
34211054	34211054	0	ROLL PIN	
34211063	34211063	0	ROLL PIN	
52324473	52324473	0	EYELET	
56324268	56324268	0	PIN	
56324362	56324362	0	LIFTING ARM PIN	
56324363	56324363	0	LIFTING ARM PIN	
56324540	56324540	0	PIN	
59024245	59024245	0	PIN	
59024247	59024247	0	CONNECTION	
59024447	59024447	0	CHASSIS FRAME	
59024763	59024763	0	RIGHT ARM	
59024768	59024768	0	LEFT ARM	
59024785	59024785	0	SUPPORT	
59024790	59024790	0	SUPPORT	

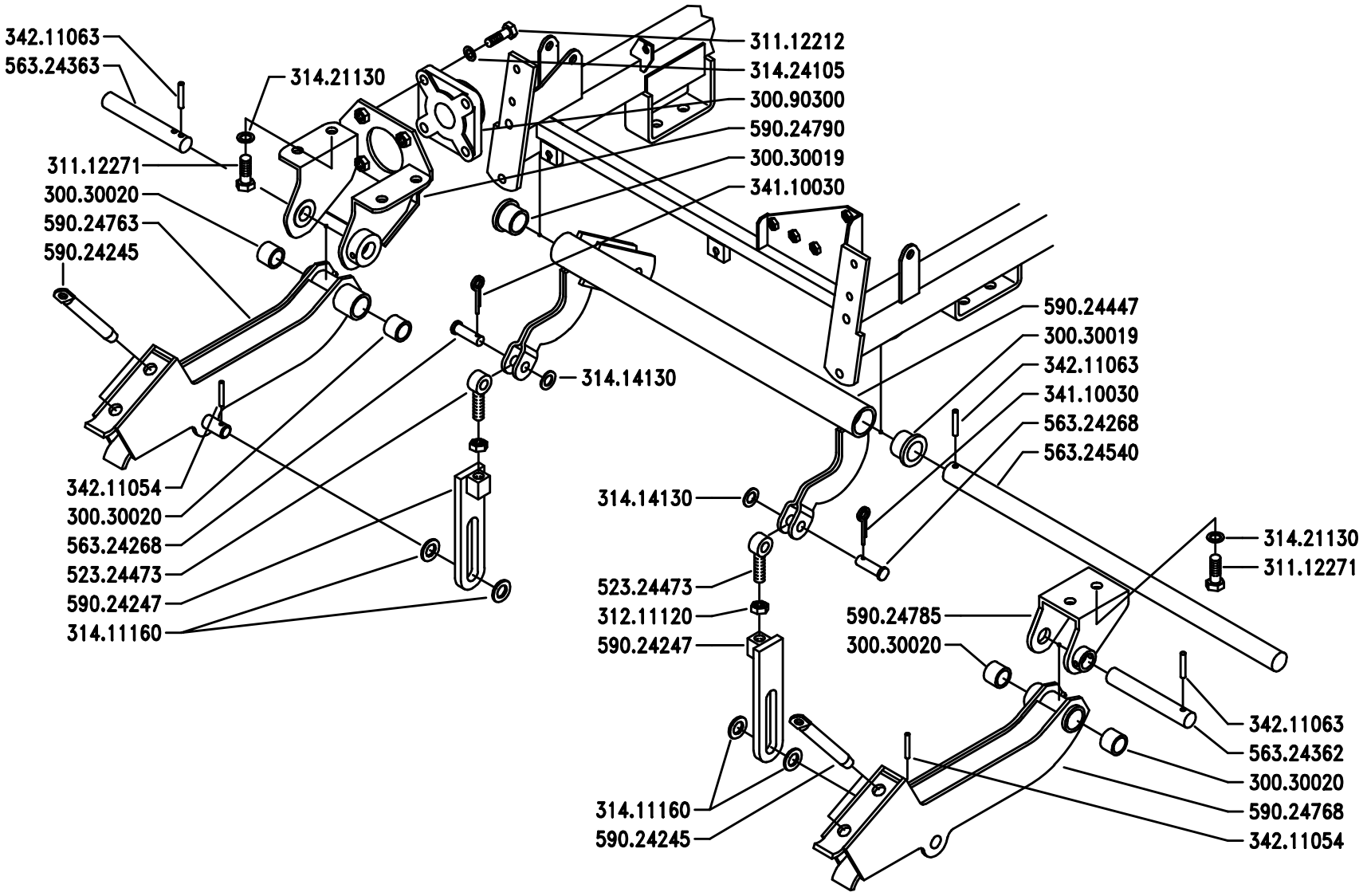

BCS

SERIE

MA.TRA

BRACCI SOLLEVAMENTO ANTERIORE

FRONT RAISING ARMS

BRAS DU SOULÈVEMENT ANTÉRIEUR

BRAZOF DEL IZADO DELANTERO

VORDERE HUBARME

DALLA MACCHINA
DE LA MAQUINA
DE LA MACHINE
FROM THE MACHINE
AB DER MASCHINE

N.

Sostituisce	N01/0
Sostituye	N01/0
Remplace	N01/0
Replaces	N01/0
Ersätzt	N01/0

N01

2/1999

Pos.	Code	Q.ty	Description	Notes
30030019	30030019	0	BUSHING A/LUB F 25X32X40X25 BR	
30030020	30030020	0	BUSHING 20X26X20	
30090300	30090300	0	SUPPORT	
31112212	31112212	0	SCREW TE M10X35 UNI 5739	
31112271	31112271	0	SCREW TE M12X25 UNI 5739	
31211120	31211120	0	NUT M12 UNI 5588 6S	
31411160	31411160	0	WASHER 16x28/2,5	
31414130	31414130	0	WASHER 13	
31421130	31421130	0	WASHER	
31424105	31424105	0	SPRING WASHER 10,5	
34110030	34110030	0	SPLIT PIN A3X20 UNI 1336	
34211054	34211054	0	ROLL PIN	
34211063	34211063	0	ROLL PIN	
52324473	52324473	0	EYELET	
56324268	56324268	0	PIN	
56324362	56324362	0	LIFTING ARM PIN	
56324363	56324363	0	LIFTING ARM PIN	
56324540	56324540	0	PIN	
59024245	59024245	0	PIN	
59024247	59024247	0	CONNECTION	
59024447	59024447	0	CHASSIS FRAME	
59024763	59024763	0	RIGHT ARM	
59024768	59024768	0	LEFT ARM	
59024785	59024785	0	SUPPORT	
59024790	59024790	0	SUPPORT	

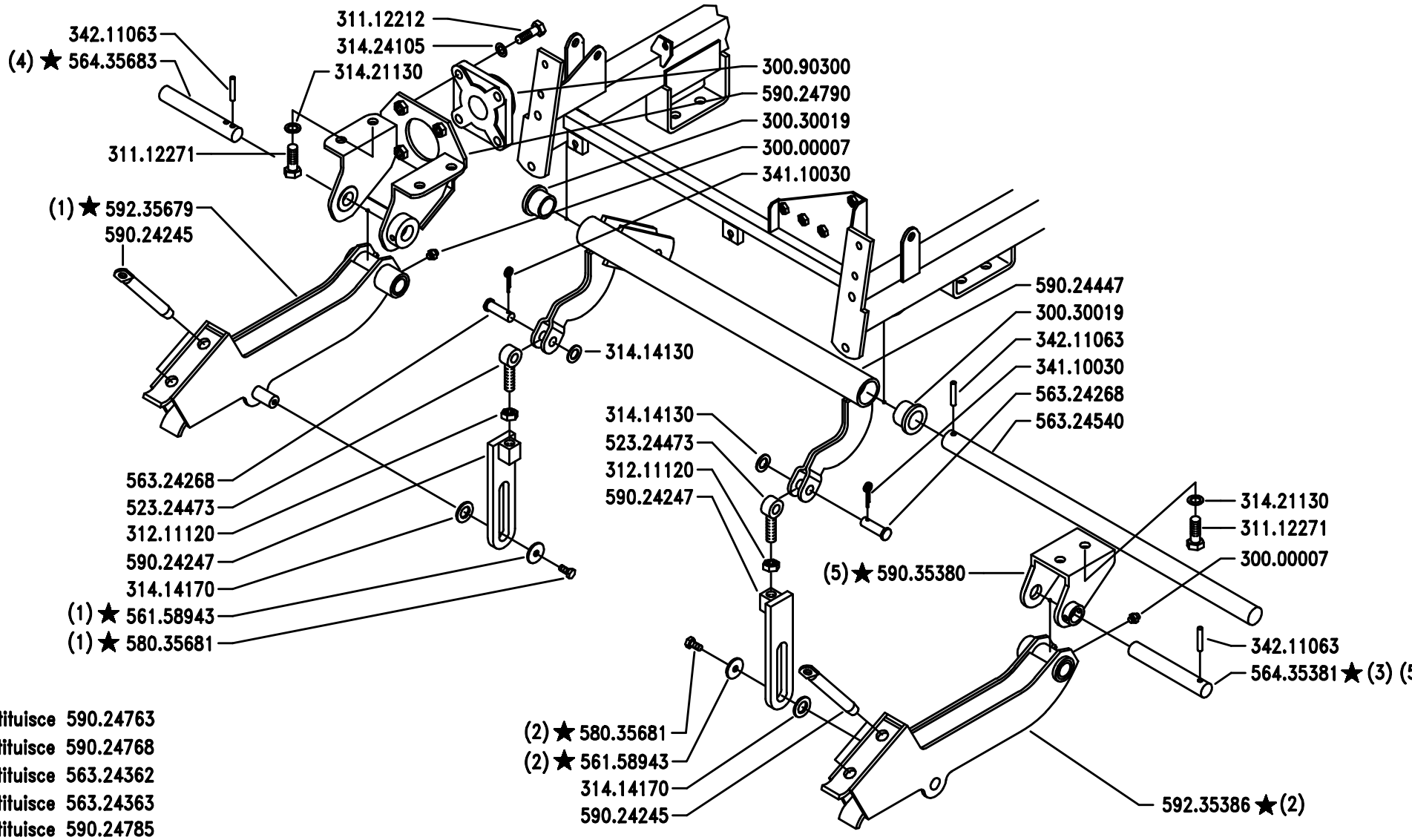

(1) sostituisce 590.24763
(2) sostituisce 590.24768
(3) sostituisce 563.24362
(4) sostituisce 563.24363
(5) sostituisce 590.24785

BCS	SERIE MA.TRA	BRACCI SOLLEVAMENTO ANTERIORE FRONT RAISING ARMS — BRAS DU SOULÈVEMENT ANTÉRIEUR BRAZOF DEL IZADO DELANTERO — VORDERE HUBARME	DALLA MACCHINA DE LA MAQUINA DE LA MACHINE FROM THE MACHINE AB DER MASCHINE ★ N.	1452	N01 12/200

Pos.	Code	Q.ty	Description	Notes
30000007	30000007	0	LUBRICATOR .M8x1,25 UNI 7663A	
30030019	30030019	0	BUSHING A/LUB F 25X32X40X25 BR	
30090300	30090300	0	SUPPORT	
31112212	31112212	0	SCREW TE M10X35 UNI 5739	
31112271	31112271	0	SCREW TE M12X25 UNI 5739	
31211120	31211120	0	NUT M12 UNI 5588 6S	
31414130	31414130	0	WASHER 13	
31414170	31414170	0	WASHER 17	
31421130	31421130	0	WASHER	
31424105	31424105	0	SPRING WASHER 10,5	
34110030	34110030	0	SPLIT PIN A3X20 UNI 1336	
34211063	34211063	0	ROLL PIN	
52324473	52324473	0	EYELET	
56158943	56158943	0	WASHER 7,0x25/2	
56324268	56324268	0	PIN	
56324540	56324540	0	PIN	
56435381	56435381	0	LIFTING ARM PIN	
56435683	56435683	0	LIFTING ARM PIN	
58035681	58035681	0	SCREW	
59024245	59024245	0	PIN	
59024247	59024247	0	CONNECTION	
59024447	59024447	0	CHASSIS FRAME	
59024790	59024790	0	SUPPORT	
59035380	59035380	0	SUPPORT	
59235386	59235386	0	LEFT ARM	
59235679	59235679	0	RIGHT ARM	

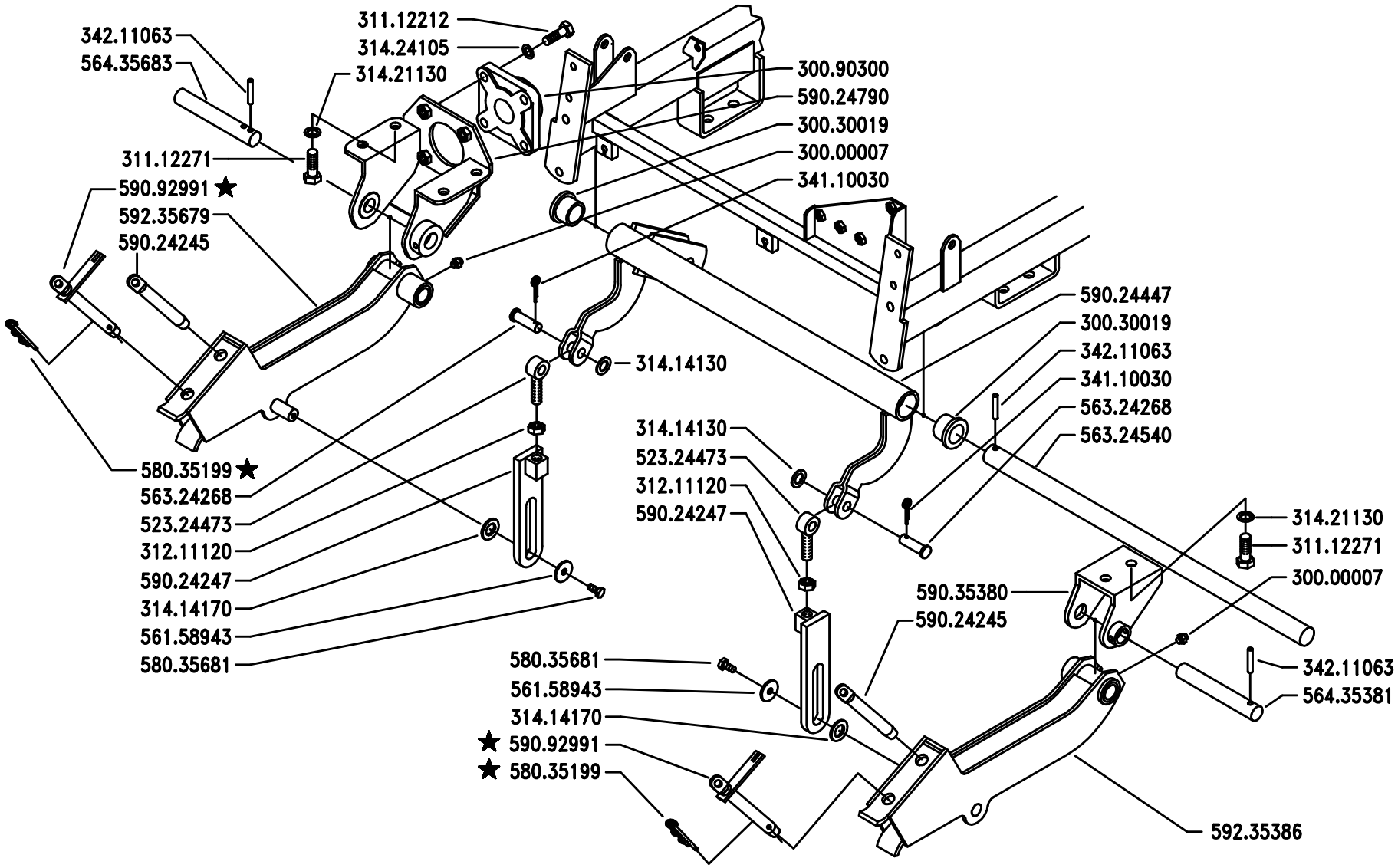

BCS	SERIE MA.TRA	BRACCI SOLLEVAMENTO ANTERIORE FRONT RAISING ARMS — BRAS DU SOULÈVEMENT ANTÉRIEUR BRAZOF DEL IZADO DELANTERO — VORDERE HUBARME	DALLA MACCHINA DE LA MAQUINA DE LA MACHINE FROM THE MACHINE AB DER MASCHINE ★ N.	AGGIORNAMENTO APLAZAMIENTO MISE A JOUR REVISION ANPASSUNG	N01 12/200

Pos.	Code	Q.ty	Description	Notes
30000007	30000007	1	LUBRICATOR .M8x1,25 UNI 7663A	
30030019	30030019	1	BUSHING A/LUB F 25X32X40X25 BR	
30090300	30090300	1	SUPPORT	
31112212	31112212	1	SCREW TE M10X35 UNI 5739	
31112271	31112271	1	SCREW TE M12X25 UNI 5739	
31211120	31211120	1	NUT M12 UNI 5588 6S	
31414130	31414130	1	WASHER 13	
31414170	31414170	1	WASHER 17	
31421130	31421130	1	WASHER	
31424105	31424105	1	SPRING WASHER 10,5	
34110030	34110030	1	SPLIT PIN A3X20 UNI 1336	
34211063	34211063	1	ROLL PIN	
52324473	52324473	1	EYELET	
56158943	56158943	1	WASHER 7,0x25/2	
56324268	56324268	1	PIN	
56324540	56324540	1	PIN	
56435381	56435381	1	LIFTING ARM PIN	
56435683	56435683	1	LIFTING ARM PIN	
58035199	58035199	1	PIN	
58035681	58035681	1	SCREW	
59024245	59024245	1	PIN	
59024247	59024247	1	CONNECTION	
59024447	59024447	1	CHASSIS FRAME	
59024790	59024790	1	SUPPORT	
59035380	59035380	1	SUPPORT	
59092991	59092991	1	PIN	
59235386	59235386	1	LEFT ARM	
59235679	59235679	1	RIGHT ARM	

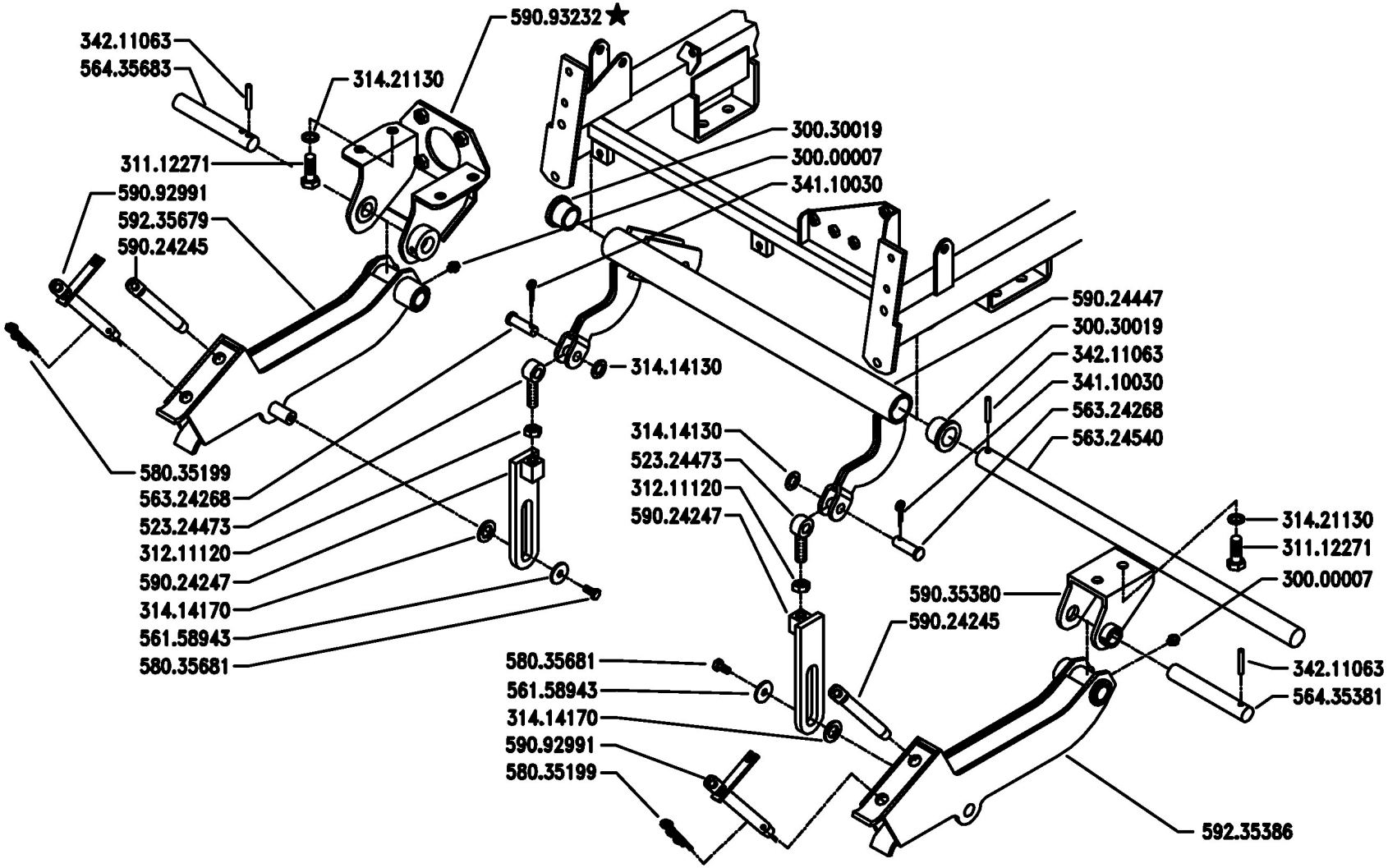

BCS	SERIE MA.TRA	BRACCI SOLLEVAMENTO ANTERIORE FRONT RAISING ARMS — BRAS DU SOULÈVEMENT ANTÉRIEUR BRAZOF DEL IZADO DELANTERO — VORDERE HUBARME	DALLA MACCHINA DE LA MAQUINA DE LA MACHINE FROM THE MACHINE AB DER MASCHINE ★ N.	759066	N01	Rev. 4
					02/2006	

DITE - BCS 32N01TD4R

Pos.	Code	Q.ty	Description	Notes
30000007	30000007	1	LUBRICATOR .M8x1,25 UNI 7663A	
30030019	30030019	1	BUSHING A/LUB F 25X32X40X25 BR	
31112271	31112271	1	SCREW TE M12X25 UNI 5739	
31211120	31211120	1	NUT M12 UNI 5588 6S	
31414130	31414130	1	WASHER 13	
31414170	31414170	1	WASHER 17	
31421130	31421130	1	WASHER	
34110030	34110030	1	SPLIT PIN A3X20 UNI 1336	
34211063	34211063	1	ROLL PIN	
52324473	52324473	1	EYELET	
56158943	56158943	1	WASHER 7,0x25/2	
56324268	56324268	1	PIN	
56324540	56324540	1	PIN	
56435381	56435381	1	LIFTING ARM PIN	
56435683	56435683	1	LIFTING ARM PIN	
58035199	58035199	1	PIN	
58035681	58035681	1	SCREW	
59024245	59024245	1	PIN	
59024247	59024247	1	CONNECTION	
59024447	59024447	1	CHASSIS FRAME	
59035380	59035380	1	SUPPORT	
59092991	59092991	1	PIN	
59093232	59093232	1	SUPPORT	
59235386	59235386	1	LEFT ARM	
59235679	59235679	1	RIGHT ARM	

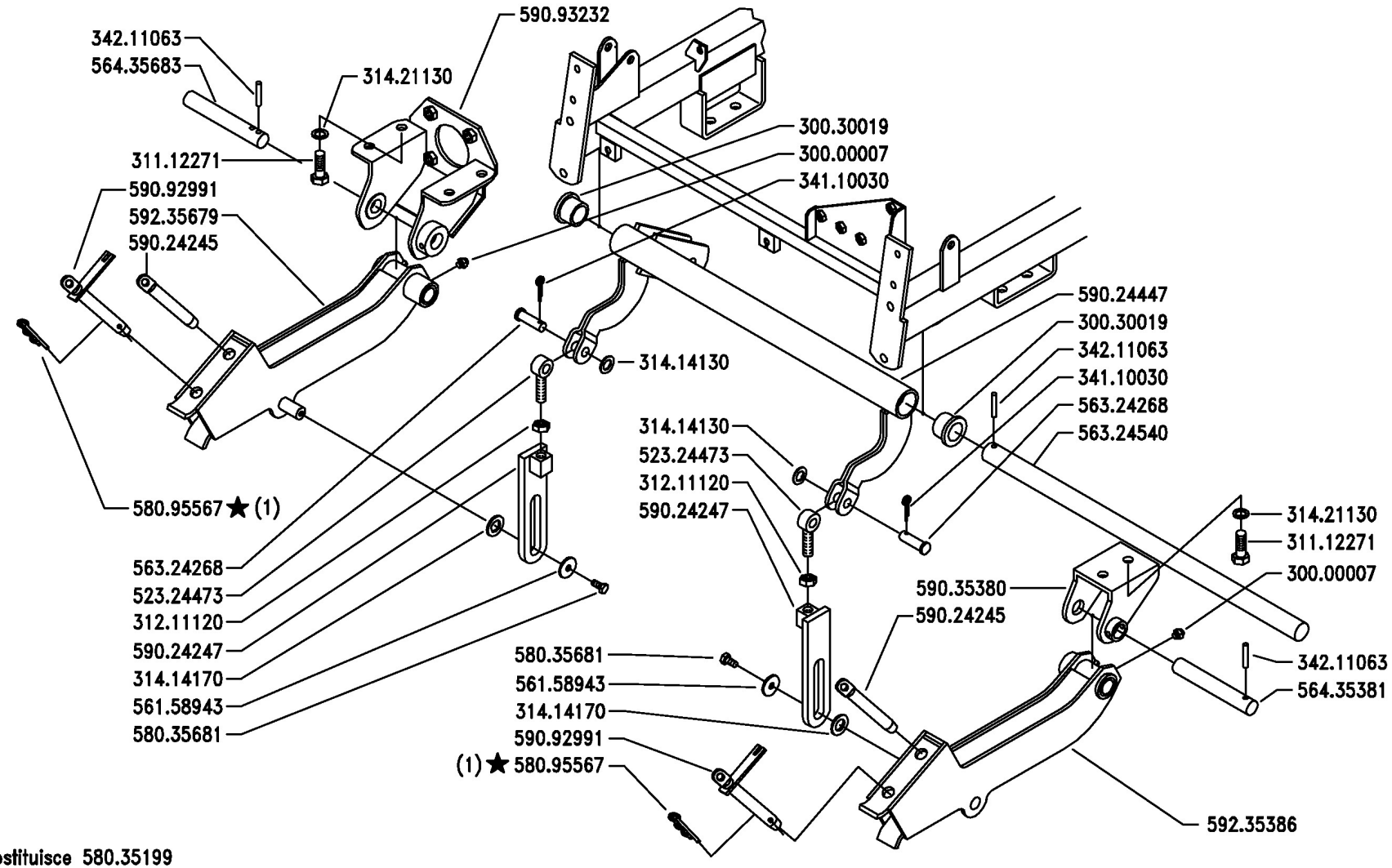

(1) sostituisce 580.35199

BCS	SERIE MA.TRA	BRACCI SOLLEVAMENTO ANTERIORE FRONT RAISING ARMS — BRAS DU SOULÈVEMENT ANTÉRIEUR BRAZOF DEL IZADO DELANTERO — VORDERE HUBARME	DALLA MACCHINA DE LA MAQUINA DE LA MACHINE FROM THE MACHINE AB DER MASCHINE ★ N.	AGGIORNAMENTO APLAZAMIENTO MISE A JOUR REVISION ANPASSUNG	N01 Rev. 5 09/2008

DIF - BCS 39N01T05R

Pos.	Code	Q.ty	Description	Notes
30000007	30000007	1	LUBRICATOR .M8x1,25 UNI 7663A	
30030019	30030019	1	BUSHING A/LUB F 25X32X40X25 BR	
31112271	31112271	1	SCREW TE M12X25 UNI 5739	
31211120	31211120	1	NUT M12 UNI 5588 6S	
31414130	31414130	1	WASHER 13	
31414170	31414170	1	WASHER 17	
31421130	31421130	1	WASHER	
34110030	34110030	1	SPLIT PIN A3X20 UNI 1336	
34211063	34211063	1	ROLL PIN	
52324473	52324473	1	EYELET	
56158943	56158943	1	WASHER 7,0x25/2	
56324268	56324268	1	PIN	
56324540	56324540	1	PIN	
56435381	56435381	1	LIFTING ARM PIN	
56435683	56435683	1	LIFTING ARM PIN	
58035681	58035681	1	SCREW	
58095567	58095567	1	PIN	
59024245	59024245	1	PIN	
59024247	59024247	1	CONNECTION	
59024447	59024447	1	CHASSIS FRAME	
59035380	59035380	1	SUPPORT	
59092991	59092991	1	PIN	
59093232	59093232	1	SUPPORT	
59235386	59235386	1	LEFT ARM	
59235679	59235679	1	RIGHT ARM	

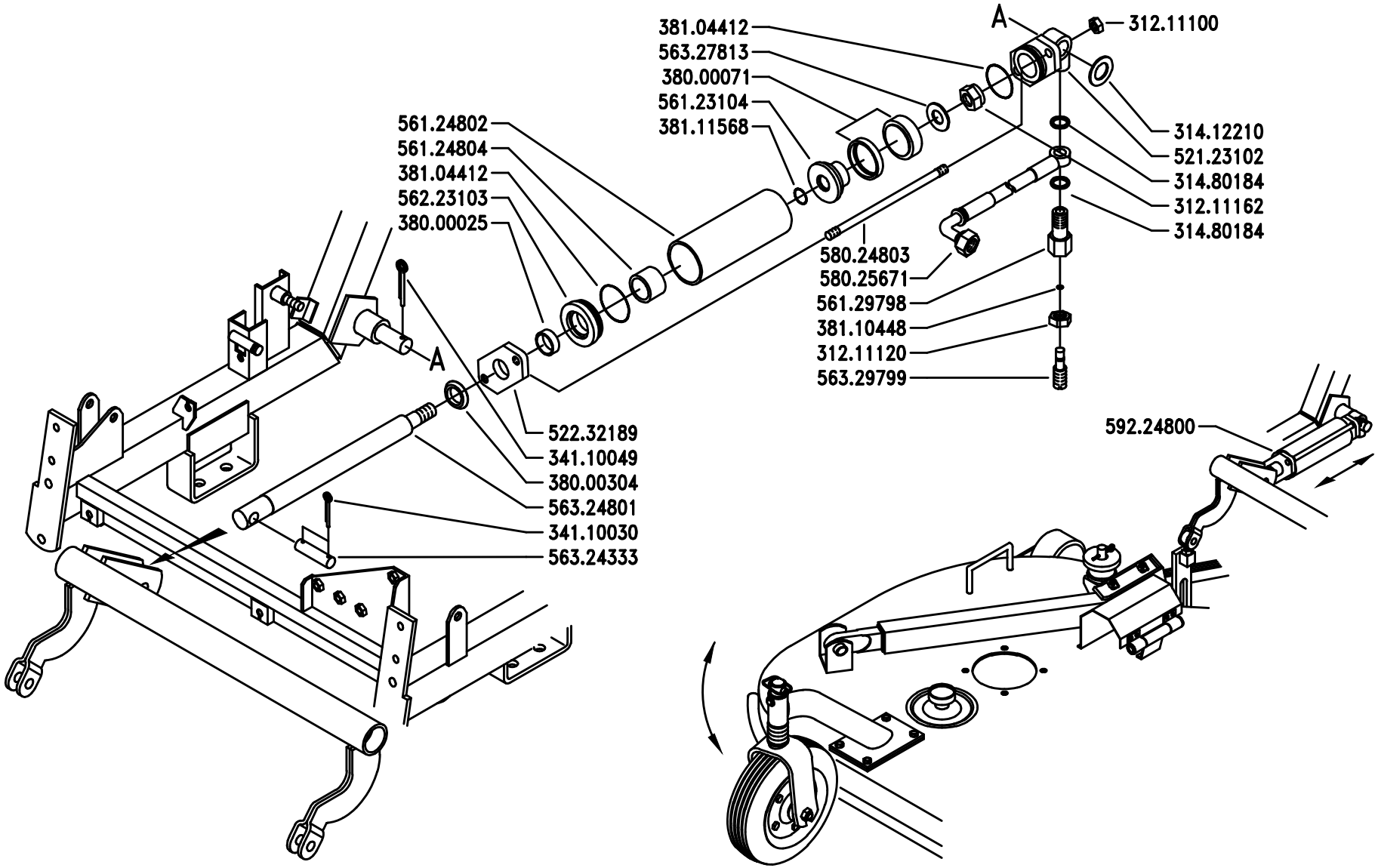

SERIE

MA.TRA

CILINDRO SOLLEVAMENTO TOSAERBA

MOWER RAISER CYLINDER

CYLINDRE DE SOULÈVEMENT DE LA TONDEUSE À GAZON

CILINDRO DE IZADO DE LA SEGADORA DE HIERBA

HUBZYLINDER RASENMÄHER

DALLA MACCHINA
DE LA MAQUINA
DE LA MACHINE
FROM THE MACHINE
AB DER MASCHINE

N.

N02

1/1999

Pos.	Code	Q.ty	Description	Notes
31211100	31211100	0	NUT M10	
31211120	31211120	0	NUT M12 UNI 5588 6S	
31211162	31211162	0	SELFLOCK NUT M16X1,5	
31411210	31411210	0	WASHER 21x37	
31480184	31480184	0	COPPER WASHER 16,7x22/1,5	
34110030	34110030	0	SPLIT PIN A3X20 UNI 1336	
34110049	34110049	0	SPLIT PIN A5X30 UNI 1336	
38000025	38000025	0	ADJUSTING RING I/DWR 25/2	
38000071	38000071	0	GASKET RSE 50-30 W	
38000304	38000304	0	SCRAPER RM 25355/8	
38104412	38104412	0	O-RING 3175 (44,12X2,62)	
38110448	38110448	0	O-RING OR 2018 (4,48X1,78)	
38111568	38111568	0	O-RING 2068 (17,17X1,78)	
52123102	52123102	0	FLANGE	
52232189	52232189	0	FLANGE	
56123104	56123104	0	PISTON	
56124802	56124802	0	CYLINDER	
56124804	56124804	0	DISTANCE SLEEVE	
56129798	56129798	0	PIPE FITTING	
56223103	56223103	0	SPACER	
56324333	56324333	0	PIN	
56324801	56324801	0	PISTON ROD	
56327813	56327813	0	WASHER	
56329799	56329799	0	ADJUSTING SCREW	
58025671	58025671	0	DISTRIBUTING PIPE	
59224800	59224800	0	LIFTING CYLINDER	

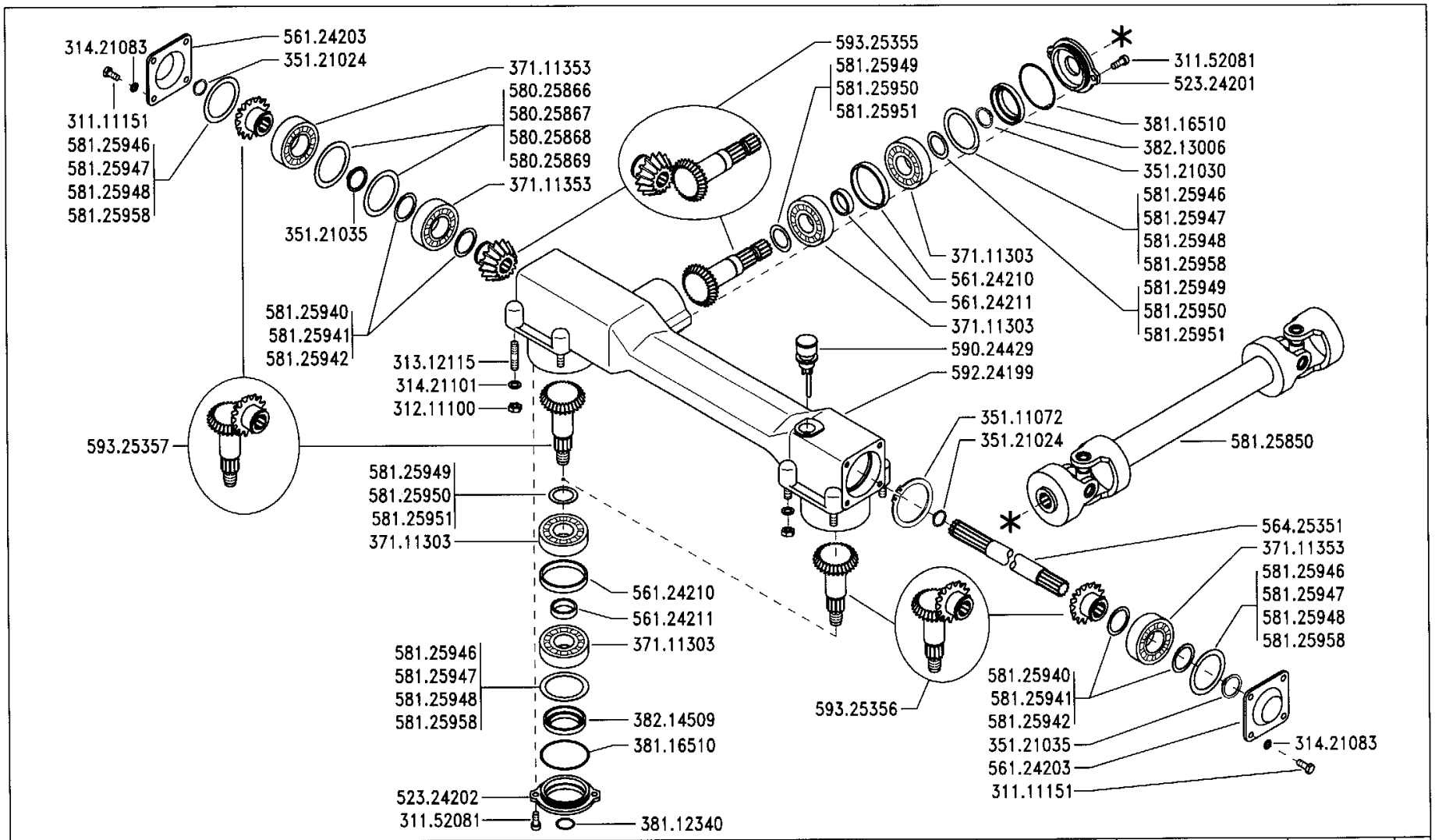

BCS	SERIE MA.TRA	GRUPPO TRASMISSIONE TOSAERBA (cm.122 LAT.) MOWER TRANSMISSION UNIT (lateral cm.122) GROUPE DE TRANSMISSION DE LA TONDEUSE (lateral cm.122) GRUPO DE TRANSMISIÓN DE LA SEGADORA (lateral cm.122) ANTRIEBSAGGREGAT RASENMÄHER (Seitlich cm.122)	DALLA MACCHINA DE LA MAQUINA DE LA MACHINE FROM THE MACHINE AB DER MASCHINE N.	PRODUZIONE 1998 PRODUCCIÓN 1998 PRODUCTION 1998 PRODUCTION 1998 PRODUKTION 1998	P01 1/1999	Mod. 0

2ENNE

Pos.	Code	Q.ty	Description	Notes
31111151	31111151	0	SCREW TE M8X16 UNI 5739 8G	
31152081	31152081	0	SCREW TCEI M8X20 UNI 5931	
31211100	31211100	0	NUT M10	
31312115	31312115	0	STUD BOLT M10X35X15X15	
31421083	31421083	0	WASHER	
31421101	31421101	0	WASHER	
35111072	35111072	0	SEEGER RING	
35121024	35121024	0	SEEGER RING	
35121030	35121030	0	SEEGER RING E 30 DIN 471	
35121035	35121035	0	SEEGER RING E 32 DIN 471	
37111303	37111303	0	BEARING 6306 (30X72X19) SKF	
37111353	37111353	0	BEARING 6207 (35X72X17) SKF	
38112340	38112340	0	O-RING 4093 (23,40X3,53)	
38116510	38116510	0	RING OR 3262 (66,35X2,62)	
38213006	38213006	0	OIL SEAL 30X62X7	
38214509	38214509	0	OIL SEAL 45X62X8	
52324201	52324201	0	COVER	
52324202	52324202	0	COVER	
56124203	56124203	0	COVER	
56124210	56124210	0	WASHER 63,6x70/10	
56124211	56124211	0	WASHER 31,6x38/10	
56425351	56425351	0	DEFLECTION SHAFT	
58025866	58025866	0	SHIM 0,2	
58025867	58025867	0	SHIM	
58025868	58025868	0	SHIM	
58025869	58025869	0	SHIM	
58125850	58125850	0	CARDAN SHAFT	
58125940	58125940	0	SHIM	
58125941	58125941	0	SHIM	
58125942	58125942	0	SHIM	
58125946	58125946	0	SHIM	
58125947	58125947	0	SHIM	
58125948	58125948	0	SHIM	
58125949	58125949	0	SHIM	

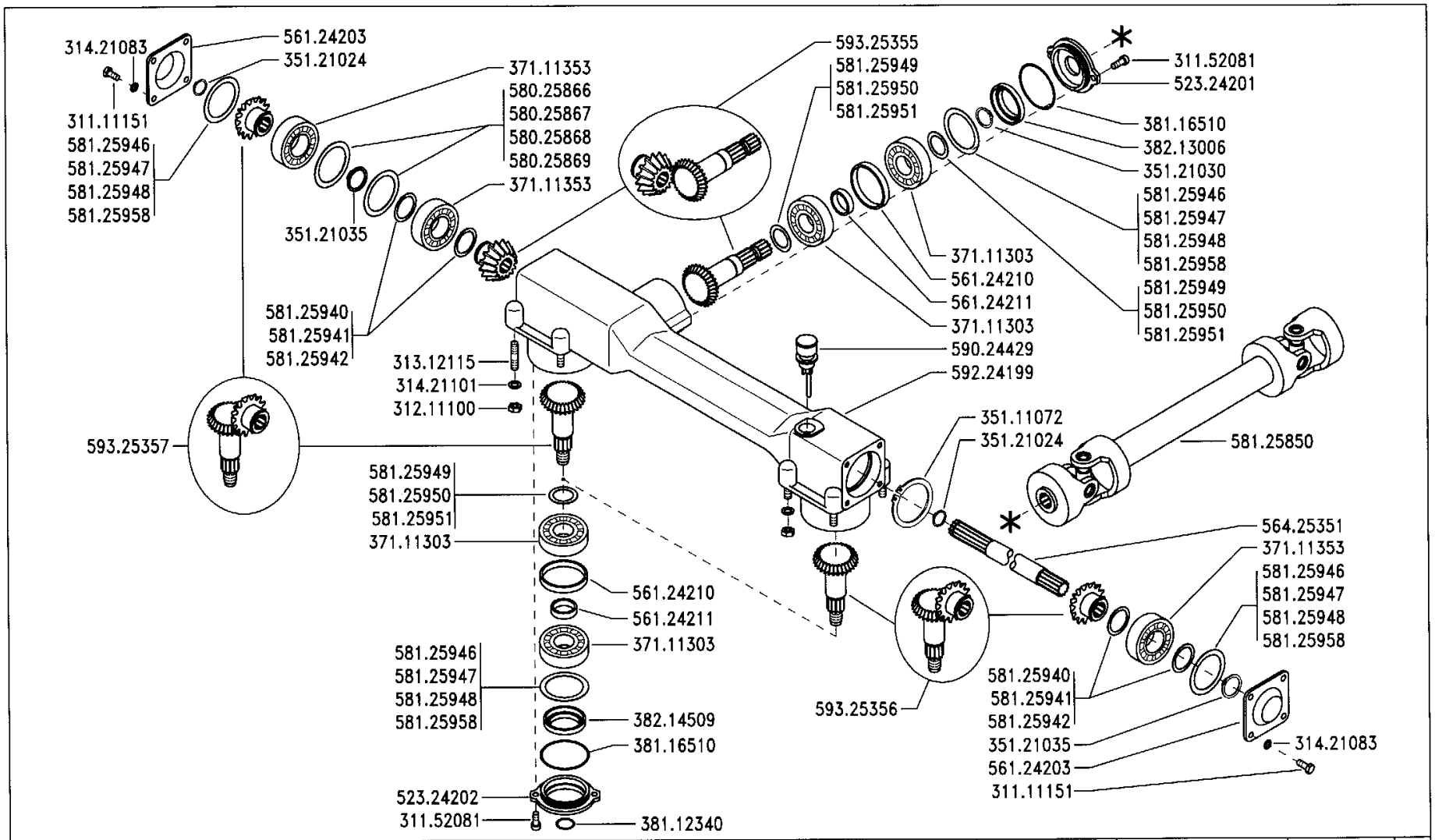

BCS	SERIE MA.TRA	GRUPPO TRASMISSIONE TOSAERBA (cm.122 LAT.) MOWER TRANSMISSION UNIT (lateral cm.122) GROUPE DE TRANSMISSION DE LA TONDEUSE (lateral cm.122) GRUPO DE TRANSMISIÓN DE LA SEGADORA (lateral cm.122) ANTRIEBSAGGREGAT RASENMÄHER (Seitlich cm.122)	DALLA MACCHINA DE LA MAQUINA DE LA MACHINE FROM THE MACHINE AB DER MASCHINE N.	PRODUZIONE 1998 PRODUCCIÓN 1998 PRODUCTION 1998 PRODUCTION 1998 PRODUKTION 1998	P01 1/1999	Mod. 0

2ENNE

Pos.	Code	Q.ty	Description	Notes
58125950	58125950	0	SHIM	
58125951	58125951	0	SHIM	
58125958	58125958	0	SHIM	
59024429	59024429	0	PLUG	
59224199	59224199	0	BOX	
59325355	59325355	0	BEVEL GEAR	
59325356	59325356	0	BEVEL GEAR	
59325357	59325357	0	BEVEL GEAR	

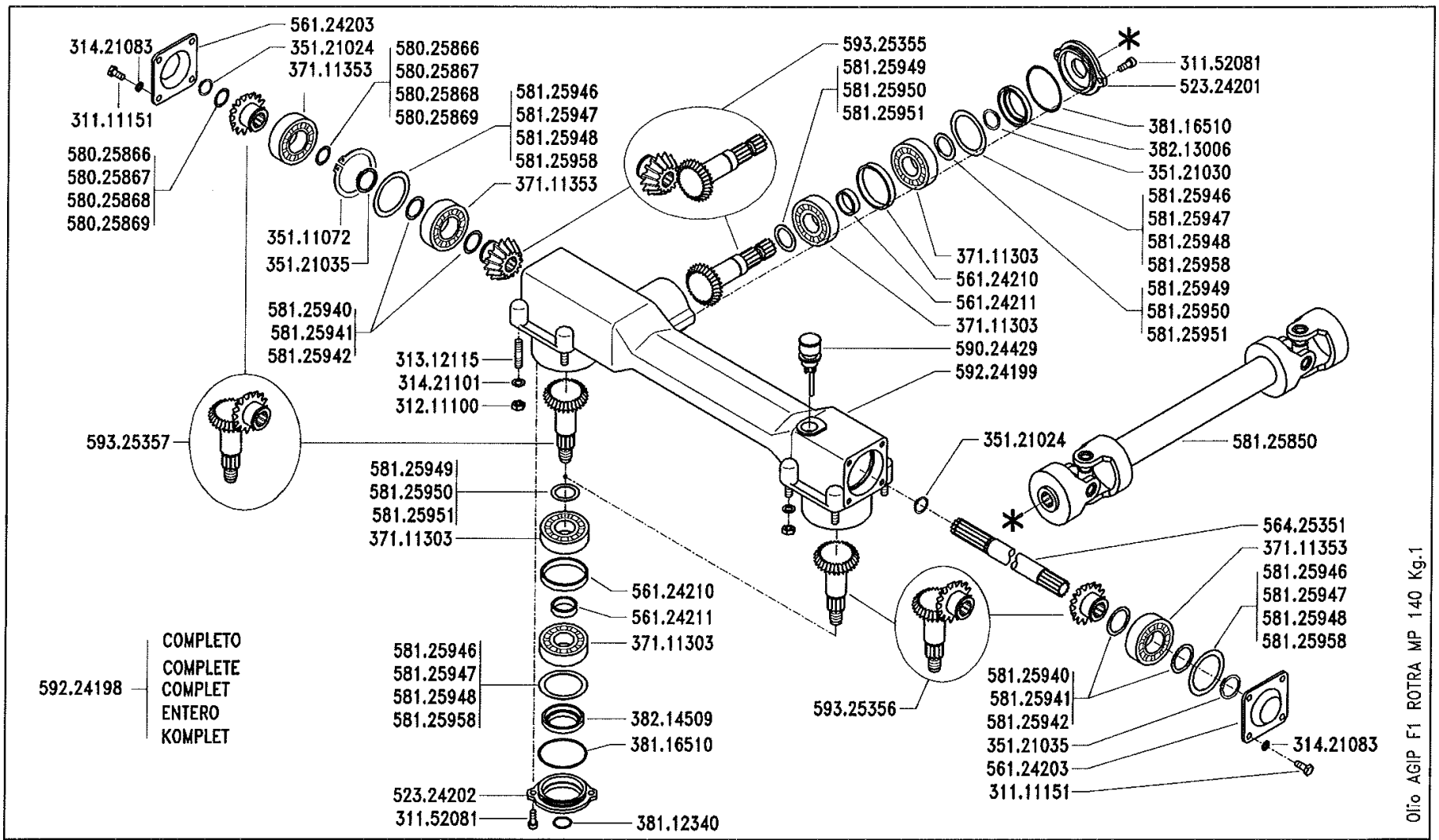

BCS	SERIE MA.TRA	GRUPPO TRASMISSIONE TOSAERBA (cm 122 LAT.) MOWER TRANSMISSION UNIT (Lateral cm 122) — GROUPE DE TRANSMISSION DE LA TONDEUSE (Lateral cm 122) GRUPO DE TRANSMISIÓN DE LA SEGADORA (Lateral cm 122) — ANTRIEBSAGGREGAT RASENMÄHER (Seitlich cm 122)	DALLA MACCHINA DE LA MAQUINA DE LA MACHINE FROM THE MACHINE AB DER MASCHINE N.	Sostituisce P01/0 Sostituye P01/0 Remplace P01/0 Replaces P01/0 Ersätzt P01/0	P01 2/1999	Mod. 1	DITE - BCS

Olio AGIP F1 ROTRA MP 140 Kg.1

Pos.	Code	Q.ty	Description	Notes
31111151	31111151	0	SCREW TE M8X16 UNI 5739 8G	
31152081	31152081	0	SCREW TCEI M8X20 UNI 5931	
31211100	31211100	0	NUT M10	
31312115	31312115	0	STUD BOLT M10X35X15X15	
31421083	31421083	0	WASHER	
31421101	31421101	0	WASHER	
35111072	35111072	0	SEEGER RING	
35121024	35121024	0	SEEGER RING	
35121030	35121030	0	SEEGER RING E 30 DIN 471	
35121035	35121035	0	SEEGER RING E 32 DIN 471	
37111303	37111303	0	BEARING 6306 (30X72X19) SKF	
37111353	37111353	0	BEARING 6207 (35X72X17) SKF	
38112340	38112340	0	O-RING 4093 (23,40X3,53)	
38116510	38116510	0	RING OR 3262 (66,35X2,62)	
38213006	38213006	0	OIL SEAL 30X62X7	
38214509	38214509	0	OIL SEAL 45X62X8	
52324201	52324201	0	COVER	
52324202	52324202	0	COVER	
56124203	56124203	0	COVER	
56124210	56124210	0	WASHER 63,6x70/10	
56124211	56124211	0	WASHER 31,6x38/10	
56425351	56425351	0	DEFLECTION SHAFT	
58025866	58025866	0	SHIM 0,2	
58025867	58025867	0	SHIM	
58025868	58025868	0	SHIM	
58025869	58025869	0	SHIM	
58125850	58125850	0	CARDAN SHAFT	
58125940	58125940	0	SHIM	
58125941	58125941	0	SHIM	
58125942	58125942	0	SHIM	
58125946	58125946	0	SHIM	
58125947	58125947	0	SHIM	
58125948	58125948	0	SHIM	
58125949	58125949	0	SHIM	

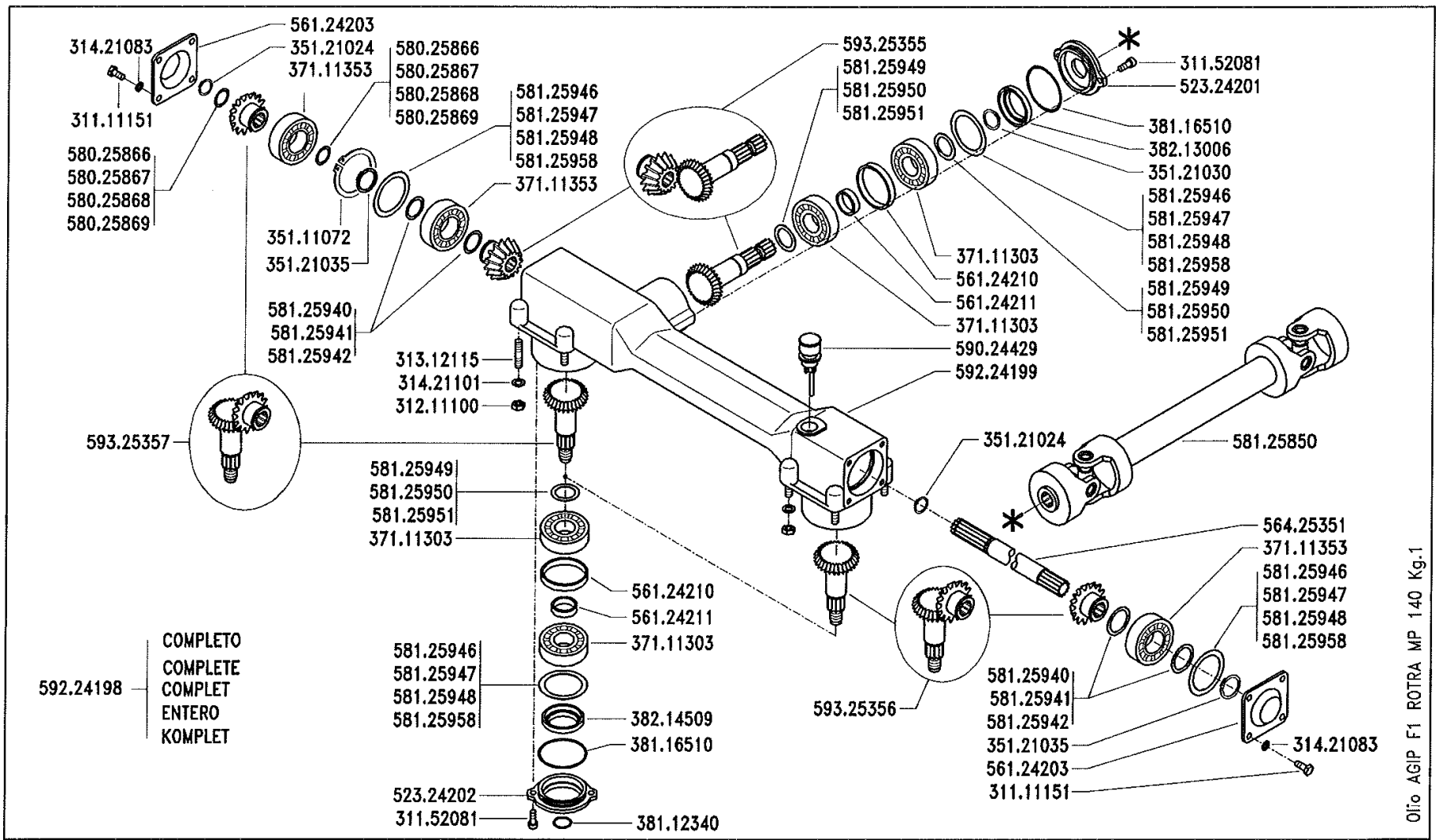

BCS	SERIE MA.TRA	GRUPPO TRASMISSIONE TOSAERBA (cm 122 LAT.) MOWER TRANSMISSION UNIT (Lateral cm 122) — GROUPE DE TRANSMISSION DE LA TONDEUSE (Lateral cm 122) GRUPO DE TRANSMISIÓN DE LA SEGADORA (Lateral cm 122) — ANTRIEBSAGGREGAT RASENMÄHER (Seitlich cm 122)	DALLA MACCHINA DE LA MAQUINA DE LA MACHINE FROM THE MACHINE AB DER MASCHINE N.	Sostituisce P01/0 Sostituye P01/0 Remplace P01/0 Replaces P01/0 Ersätzt P01/0	P01 2/1999	Mod. 1	DITE - BCS

Olio AGIP F1 ROTRA MP 140 Kg.1

Pos.	Code	Q.ty	Description	Notes
58125950	58125950	0	SHIM	
58125951	58125951	0	SHIM	
58125958	58125958	0	SHIM	
59024429	59024429	0	PLUG	
59224198	59224198	0	DRIVE HOUSING	
59224199	59224199	0	BOX	
59325355	59325355	0	BEVEL GEAR	
59325356	59325356	0	BEVEL GEAR	
59325357	59325357	0	BEVEL GEAR	

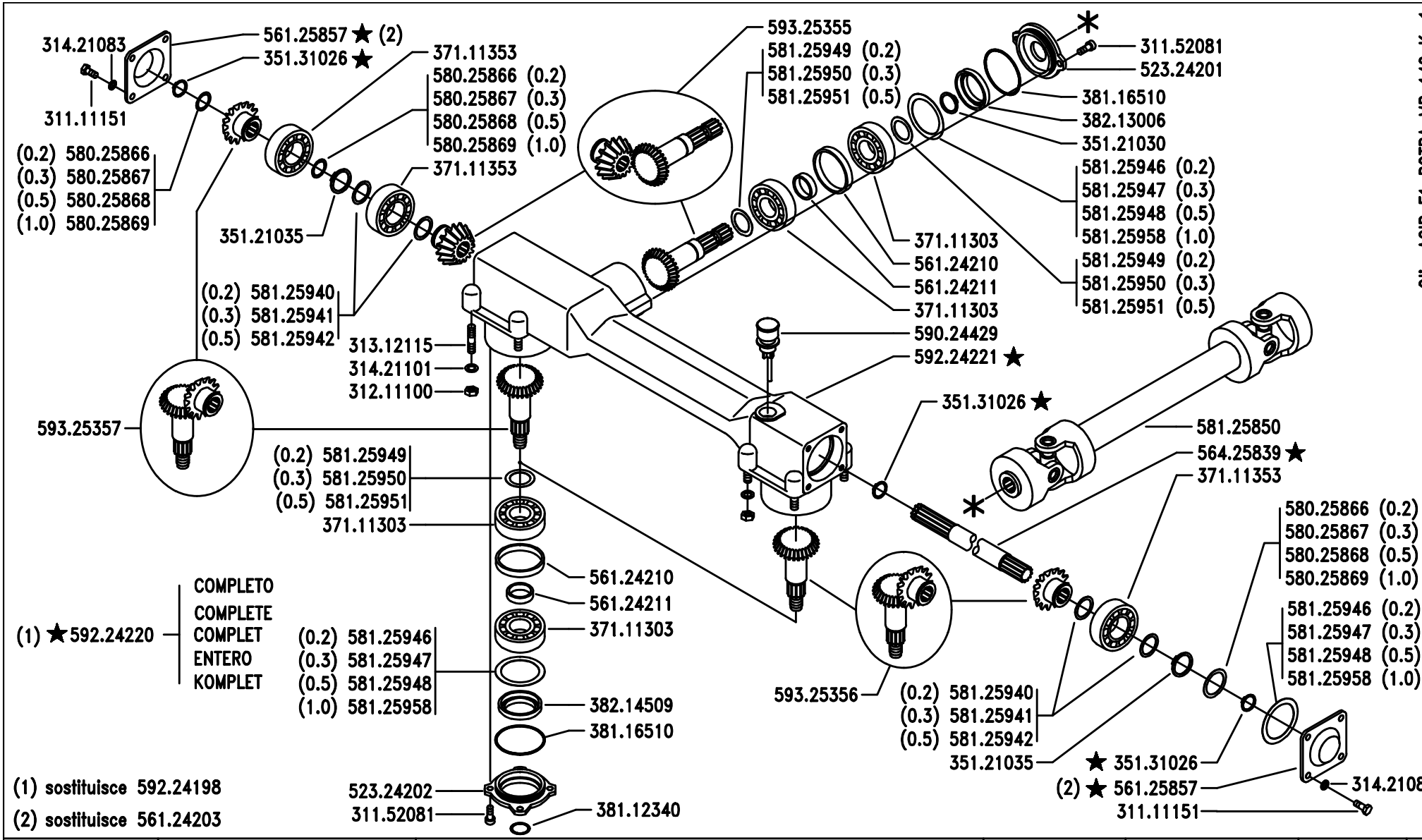

BCS

SERIE

MA.TRA

GRUPPO TRASMISSIONE TOSAERBA (cm 122 LAT.)

MOWER TRANSMISSION UNIT (Lateral cm 122)

GROUPE DE TRANSMISSION DE LA TONDEUSE (Lateral cm 122)

GRUPO DE TRANSMISIÓN DE LA SEGADORA (Lateral cm 122)

ANTRIEBSAGGREGAT RASENMÄHER (Seitlich cm 122)

DALLA MACCHINA
DE LA MAQUINA
DE LA MACHINE
FROM THE MACHINE
AB DER MASCHINE

★ N. 1030

ERRATA CORRIGE

P01

4/199

Pos.	Code	Q.ty	Description	Notes
31111151	31111151	0	SCREW TE M8X16 UNI 5739 8G	
31152081	31152081	0	SCREW TCEI M8X20 UNI 5931	
31211100	31211100	0	NUT M10	
31312115	31312115	0	STUD BOLT M10X35X15X15	
31421083	31421083	0	WASHER	
31421101	31421101	0	WASHER	
35121030	35121030	0	SEEGER RING E 30 DIN 471	
35121035	35121035	0	SEEGER RING E 32 DIN 471	
35131026	35131026	0	SEEGER RING	
37111303	37111303	0	BEARING 6306 (30X72X19) SKF	
37111353	37111353	0	BEARING 6207 (35X72X17) SKF	
38112340	38112340	0	O-RING 4093 (23,40X3,53)	
38116510	38116510	0	RING OR 3262 (66,35X2,62)	
38213006	38213006	0	OIL SEAL 30X62X7	
38214509	38214509	0	OIL SEAL 45X62X8	
52324201	52324201	0	COVER	
52324202	52324202	0	COVER	
56124210	56124210	0	WASHER 63,6x70/10	
56124211	56124211	0	WASHER 31,6x38/10	
56125857	56125857	0	COVER	
56425839	56425839	0	DEFLECTION SHAFT	
58025866	58025866	0	SHIM 0,2	
58025867	58025867	0	SHIM	
58025868	58025868	0	SHIM	
58025869	58025869	0	SHIM	
58125850	58125850	0	CARDAN SHAFT	
58125940	58125940	0	SHIM	
58125941	58125941	0	SHIM	
58125942	58125942	0	SHIM	
58125946	58125946	0	SHIM	
58125947	58125947	0	SHIM	
58125948	58125948	0	SHIM	
58125949	58125949	0	SHIM	
58125950	58125950	0	SHIM	

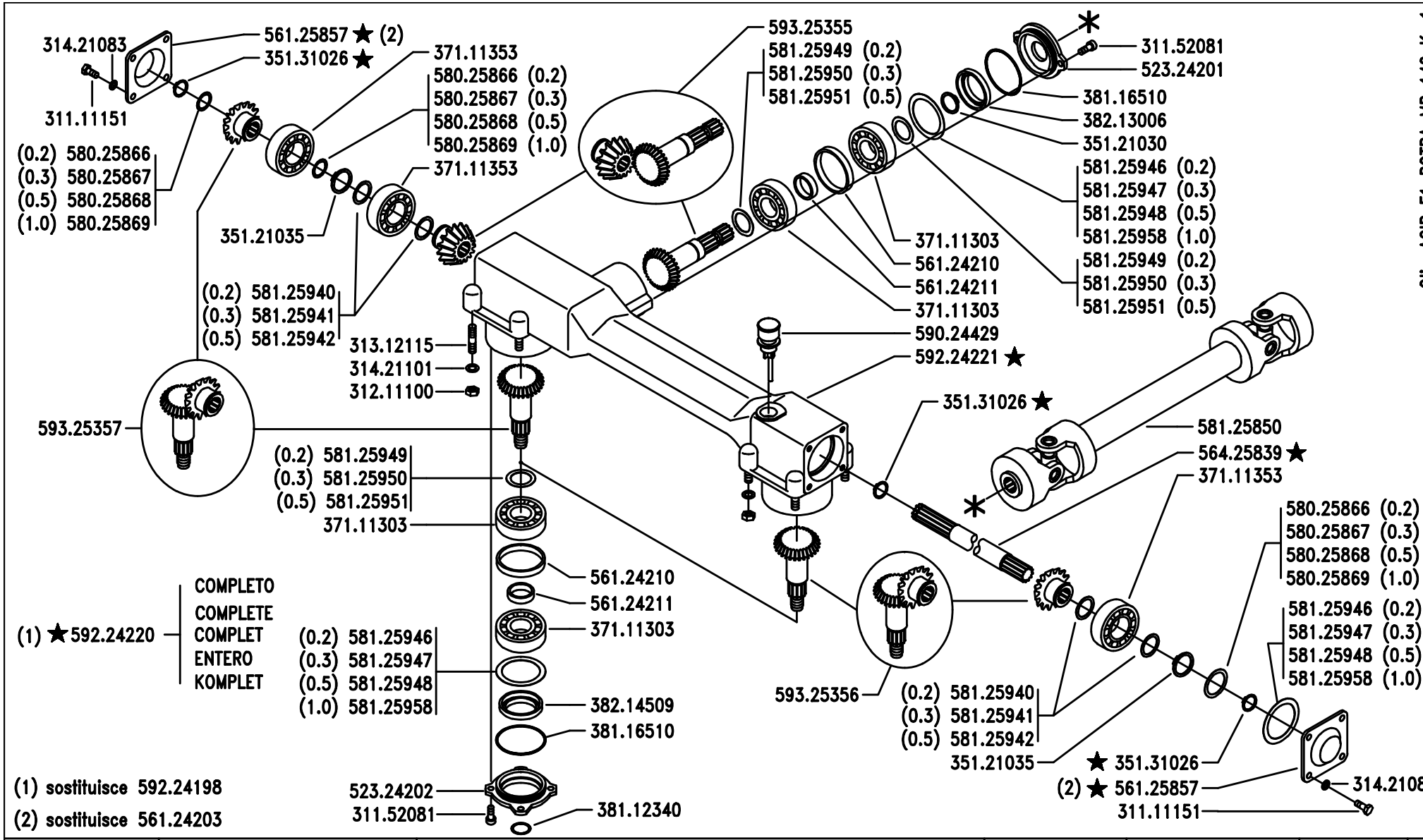

BCS

SERIE

MA.TRA

GRUPPO TRASMISSIONE TOSAERBA (cm 122 LAT.)

MOWER TRANSMISSION UNIT (Lateral cm 122)

GROUPE DE TRANSMISSION DE LA TONDEUSE (Lateral cm 122)

GRUPO DE TRANSMISIÓN DE LA SEGADORA (Lateral cm 122)

ANTRIEBSAGGREGAT RASENMÄHER (Seitlich cm 122)

DALLA MACCHINA
DE LA MAQUINA
DE LA MACHINE
FROM THE MACHINE
AB DER MASCHINE

★ N. 1030

ERRATA CORRIGE

P01

4/199

Pos.	Code	Q.ty	Description	Notes
58125951	58125951	0	SHIM	
58125958	58125958	0	SHIM	
59024429	59024429	0	PLUG	
59224220	59224220	0	DRIVE HOUSING	
59224221	59224221	0	BOX	
59325355	59325355	0	BEVEL GEAR	
59325356	59325356	0	BEVEL GEAR	
59325357	59325357	0	BEVEL GEAR	

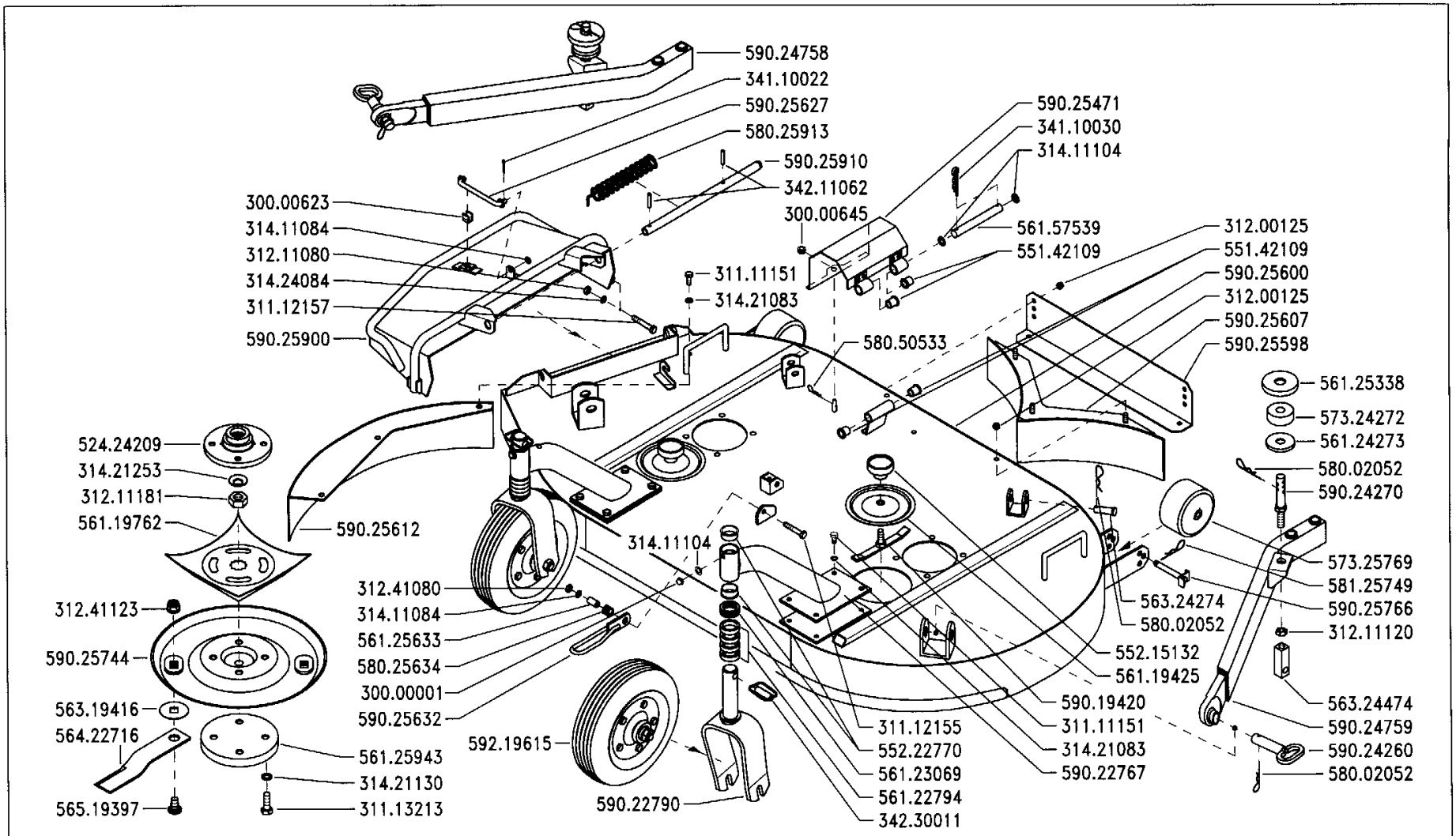

BCS	SERIE MA.TRA	TOSAERBA SCARICO LATERALE cm.122 MOWER LATERAL UNLOADER cm.122 — TONDEUSE À GAZON AVEC DÉCHARGEMENT LATÉRAL cm.122 SEGADORA DE HIERBA EVACUACIÓN LATERAL cm.122 — RASENMÄHER SEITLICH ENTLADUNG cm.122	DALLA MACCHINA DE LA MAQUINA DE LA MACHINE FROM THE MACHINE AB DER MASCHINE N.	PRODUZIONE 1998 PRODUCCIÓN 1998 PRODUCTION 1998 PRODUCTION 1998 PRODUKTION 1998	P03 1/1999	Mod. 0

2ENNE

Pos.	Code	Q.ty	Description	Notes
30000001	30000001	0	LUBRICATOR M10	
30000623	30000623	0	ROD	
30000645	30000645	0	CABLE GLAND 80/110/15	
31111151	31111151	0	SCREW TE M8X16 UNI 5739 8G	
31112155	31112155	0	SCREW TE M8X45 UNI 5739 8G	
31112157	31112157	0	SCREW TE M8X50 UNI 5739 8G	
31113213	31113213	0	SCREW TE M12X20 UNI 5739	
31200125	31200125	0	SELFLOCK NUT M8	
31211080	31211080	0	NUT M8	
31211120	31211120	0	NUT M12 UNI 5588 6S	
31211181	31211181	0	NUT M18X1,5	
31241080	31241080	0	HEXAGON SELFLOCK NUT M8	
31241123	31241123	0	ELFLOCK NUT M12	
31411084	31411084	0	WASHER 8,4x17	
31411104	31411104	0	WASHER 10,5x18	
31421083	31421083	0	WASHER	
31421130	31421130	0	WASHER	
31421253	31421253	0	WASHER	
31424084	31424084	0	SPRING WASHER 8,4	
34110022	34110022	0	VEDI COD.F0810505010 COP.A2X20	
34110030	34110030	0	SPLIT PIN A3X20 UNI 1336	
34211062	34211062	0	ROLL PIN	
34230011	34230011	0	PIN	
52424209	52424209	0	FLANGE	
55142109	55142109	0	BUSHING	
55215132	55215132	0	RING NUT	
55222770	55222770	0	BUSHING	
56119425	56119425	0	COVER	
56119762	56119762	0	CAP	
56122794	56122794	0	SPACER	
56123069	56123069	0	SPACER	
56124273	56124273	0	CUP	
56125338	56125338	0	CUP	
56125633	56125633	0	SPACER	

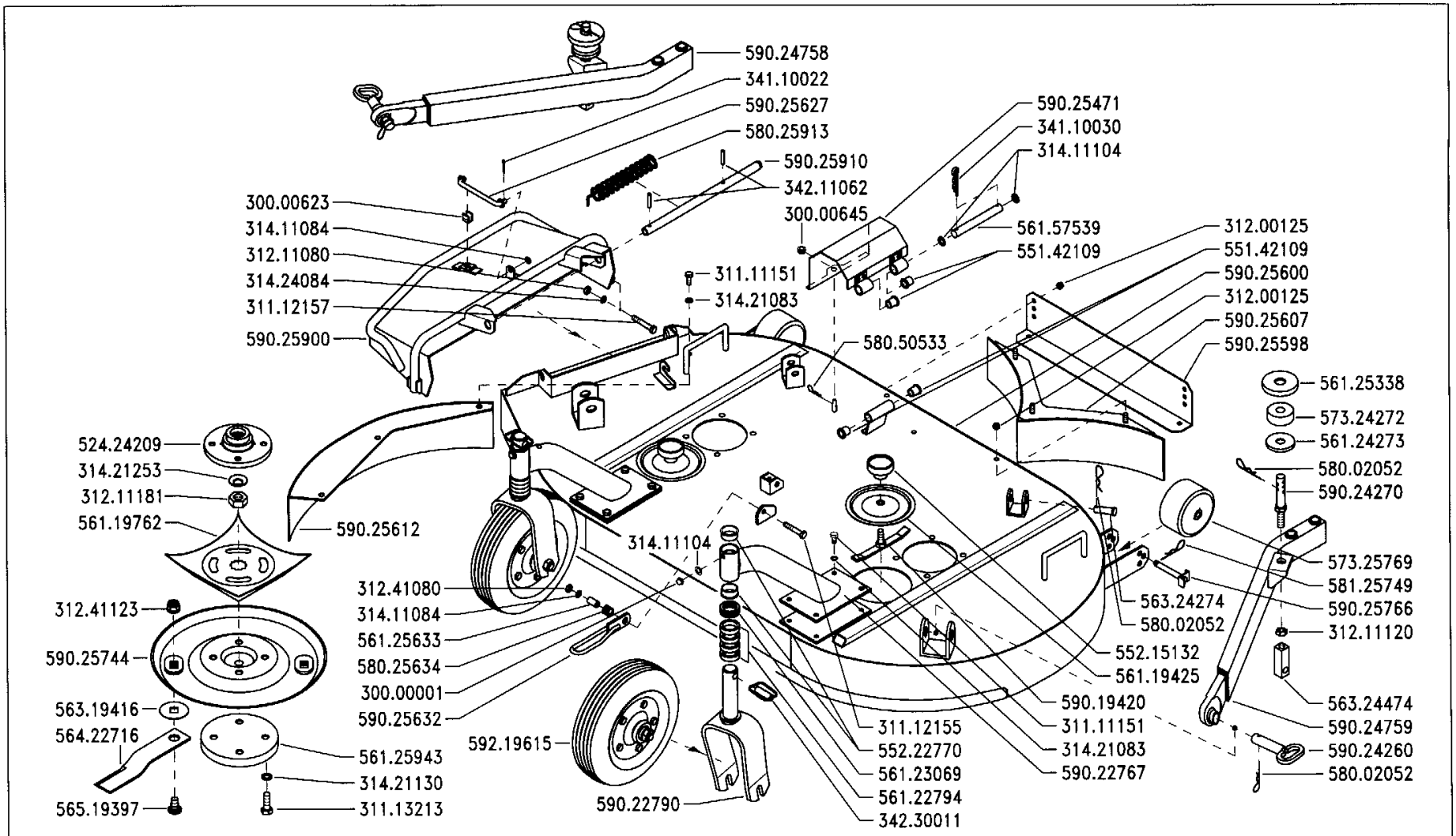

BCS	SERIE MA.TRA	TOSAERBA SCARICO LATERALE cm.122 MOWER LATERAL UNLOADER cm.122 — TONDEUSE À GAZON AVEC DÉCHARGEMENT LATÉRAL cm.122 SEGADORA DE HIERBA EVACUACIÓN LATERAL cm.122 — RASENMÄHER SEITLICH ENTLADUNG cm.122	DALLA MACCHINA DE LA MAQUINA DE LA MACHINE FROM THE MACHINE AB DER MASCHINE N.	PRODUZIONE 1998 PRODUCCIÓN 1998 PRODUCTION 1998 PRODUCTION 1998 PRODUKTION 1998	P03 1/1999	Mod. 0

2ENNE

Pos.	Code	Q.ty	Description	Notes
56125943	56125943	0	CAP	
56157539	56157539	0	PIN	
56319416	56319416	0	WASHER	
56324274	56324274	0	PIN	
56324474	56324474	0	TERMINAL	
56422716	56422716	0	RIGHT KNIFE	
56519397	56519397	0	PIN	
57324272	57324272	0	STOPPER	
57325769	57325769	0	WHEEL	
58002052	58002052	0	PIN	
58025634	58025634	0	SPRING	
58025913	58025913	0	SPRING	
58050533	58050533	0	PIN	
58125749	58125749	0	PIN	
59019420	59019420	0	CROSS MEMBER	
59022767	59022767	0	RIGHT ARM	
59022790	59022790	0	COMPLETE FORK	
59024260	59024260	0	CONNECTING BOLT	
59024270	59024270	0	REGULATOR	
59024758	59024758	0	RIGHT ARM	
59024759	59024759	0	LEFT ARM	
59025471	59025471	0	COMPLETE COVER	
59025598	59025598	0	REGULATOR	
59025600	59025600	0	LAWNMOWER SUMP	
59025607	59025607	0	DUCT	
59025612	59025612	0	STRIKER PLATE	
59025627	59025627	0	ROD	
59025632	59025632	0	CLEVIS	
59025744	59025744	0	COMPLETE DISC	
59025766	59025766	0	WHEEL SPINDLE	
59025900	59025900	0	PANEL FLAP	
59025910	59025910	0	TUBE	
59219615	59219615	0	WHEEL	

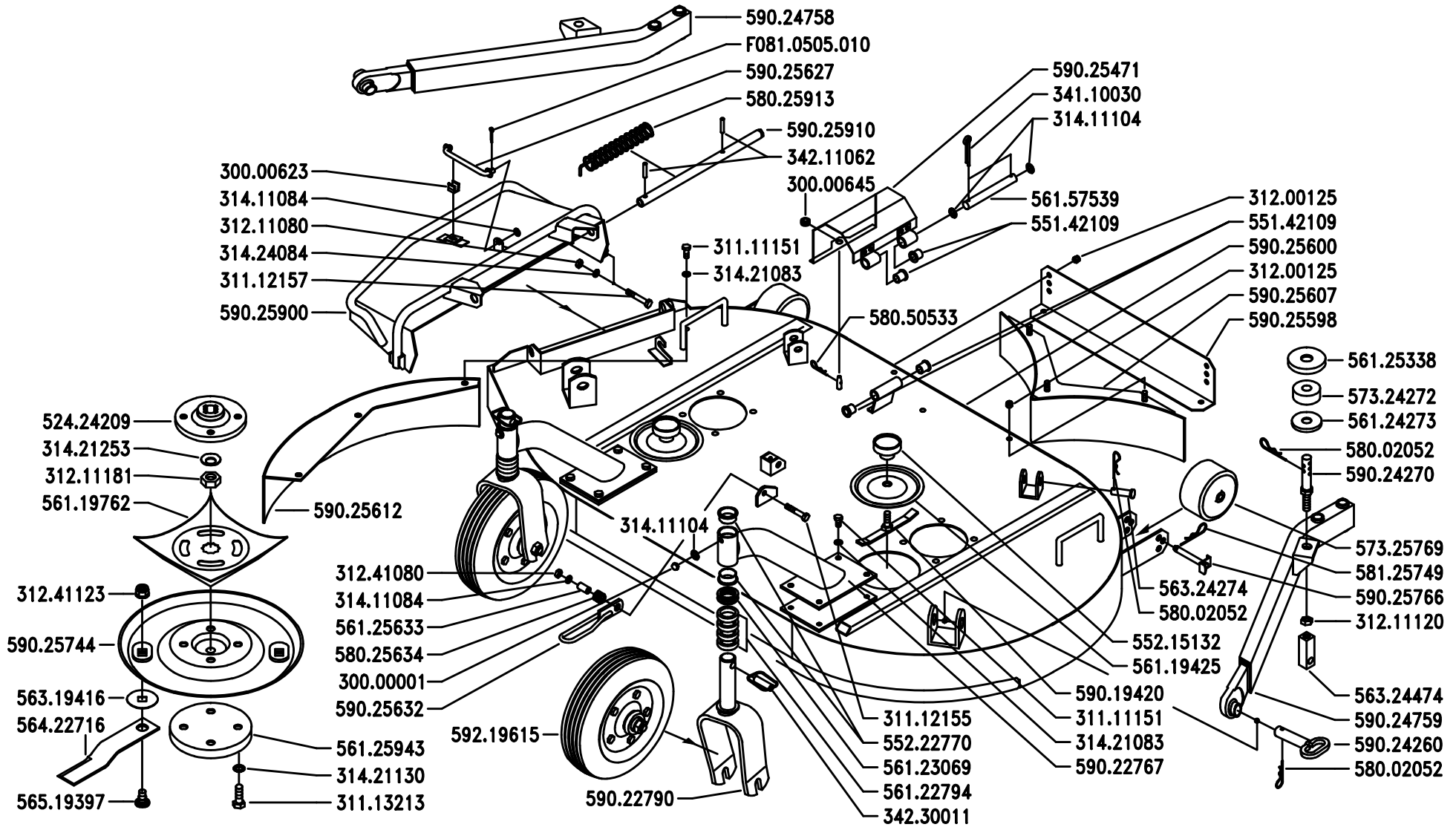

BCS	SERIE MA.TRA	TOSAERBA SCARICO LATERALE cm.122 MOWER LATERAL UNLOADER cm.122 — TONDEUSE À GAZON AVEC DÉCHARGEMENT LATÉRAL cm.122 SEGADORA DE HIERBA EVACUACIÓN LATERAL cm.122 — RASENMÄHER SEITLICH ENTLADUNG cm.122	DALLA MACCHINA DE LA MAQUINA DE LA MACHINE FROM THE MACHINE AB DER MASCHINE N.	Sostituisce P03/0 Sostituye P03/0 Remplace P03/0 Replaces P03/0 Ersätzt P03/0	P03 2/199

Pos.	Code	Q.ty	Description	Notes
30000001	30000001	0	LUBRICATOR M10	
30000623	30000623	0	ROD	
30000645	30000645	0	CABLE GLAND 80/110/15	
31111151	31111151	0	SCREW TE M8X16 UNI 5739 8G	
31112155	31112155	0	SCREW TE M8X45 UNI 5739 8G	
31112157	31112157	0	SCREW TE M8X50 UNI 5739 8G	
31113213	31113213	0	SCREW TE M12X20 UNI 5739	
31200125	31200125	0	SELFLOCK NUT M8	
31211080	31211080	0	NUT M8	
31211120	31211120	0	NUT M12 UNI 5588 6S	
31211181	31211181	0	NUT M18X1,5	
31241080	31241080	0	HEXAGON SELFLOCK NUT M8	
31241123	31241123	0	ELFLOCK NUT M12	
31411084	31411084	0	WASHER 8,4x17	
31411104	31411104	0	WASHER 10,5x18	
31421083	31421083	0	WASHER	
31421130	31421130	0	WASHER	
31421253	31421253	0	WASHER	
31424084	31424084	0	SPRING WASHER 8,4	
34110030	34110030	0	SPLIT PIN A3X20 UNI 1336	
34211062	34211062	0	ROLL PIN	
34230011	34230011	0	PIN	
52424209	52424209	0	FLANGE	
55142109	55142109	0	BUSHING	
55215132	55215132	0	RING NUT	
55222770	55222770	0	BUSHING	
56119425	56119425	0	COVER	
56119762	56119762	0	CAP	
56122794	56122794	0	SPACER	
56123069	56123069	0	SPACER	
56124273	56124273	0	CUP	
56125338	56125338	0	CUP	
56125633	56125633	0	SPACER	
56125943	56125943	0	CAP	

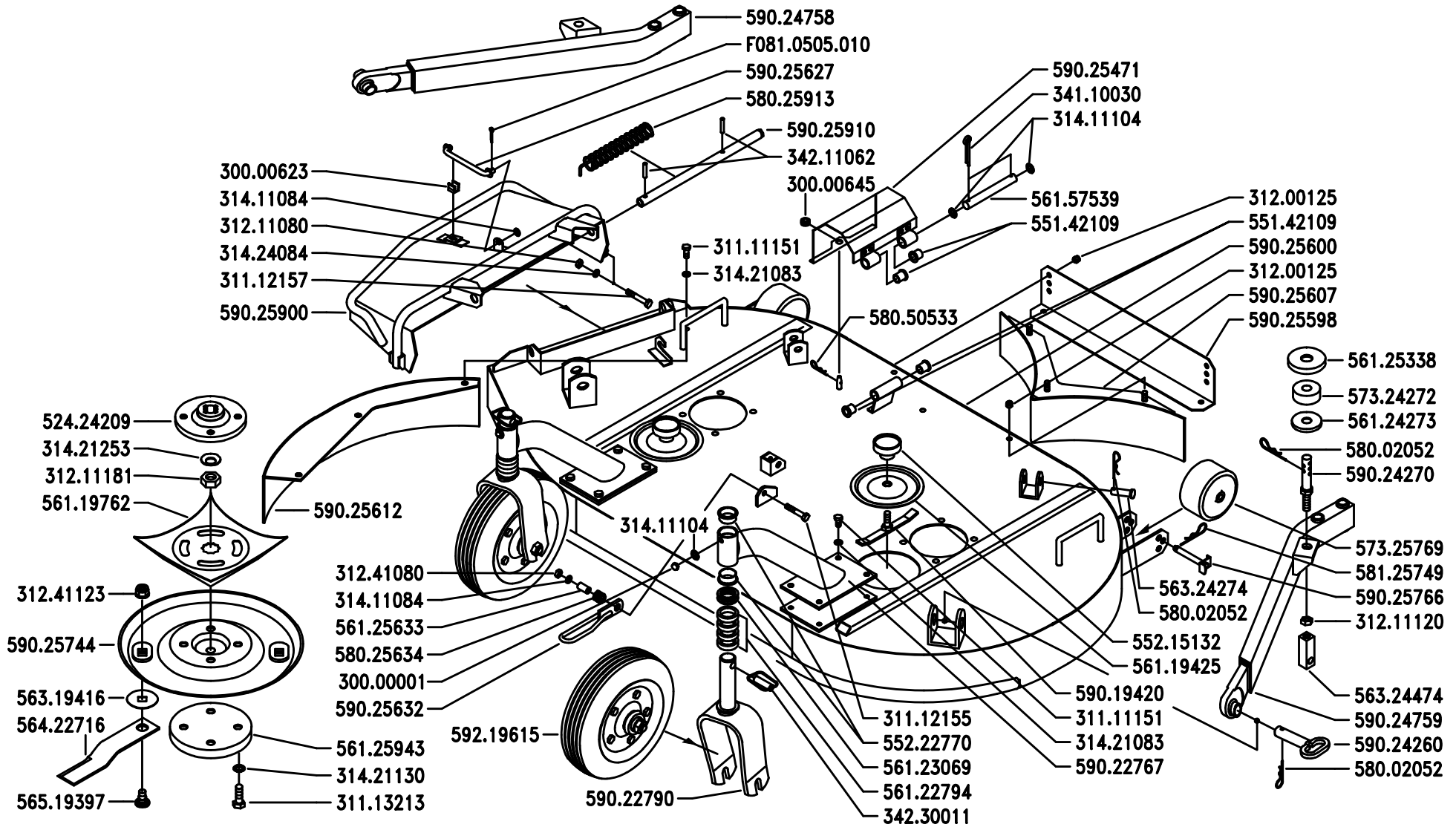

BCS

SERIE

MA.TRA

TOSAERBA SCARICO LATERALE cm.122

MOWER LATERAL UNLOADER cm.122

TONDEUSE À GAZON AVEC DÉCHARGEMENT LATÉRAL cm.122

SEGADORA DE HIERBA EVACUACIÓN LATERAL cm.122

RASENMÄHER SEITLICH ENTLADUNG cm.122

DALLA MACCHINA
DE LA MAQUINA
DE LA MACHINE
FROM THE MACHINE
AB DER MASCHINE

N.

Sostituisce	P03/0
Sostituye	P03/0
Remplace	P03/0
Replaces	P03/0
Ersätzt	P03/0

P03

2/199

Pos.	Code	Q.ty	Description	Notes
56157539	56157539	0	PIN	
56319416	56319416	0	WASHER	
56324274	56324274	0	PIN	
56324474	56324474	0	TERMINAL	
56422716	56422716	0	RIGHT KNIFE	
56519397	56519397	0	PIN	
57324272	57324272	0	STOPPER	
57325769	57325769	0	WHEEL	
58002052	58002052	0	PIN	
58025634	58025634	0	SPRING	
58025913	58025913	0	SPRING	
58050533	58050533	0	PIN	
58125749	58125749	0	PIN	
59019420	59019420	0	CROSS MEMBER	
59022767	59022767	0	RIGHT ARM	
59022790	59022790	0	COMPLETE FORK	
59024260	59024260	0	CONNECTING BOLT	
59024270	59024270	0	REGULATOR	
59024758	59024758	0	RIGHT ARM	
59024759	59024759	0	LEFT ARM	
59025471	59025471	0	COMPLETE COVER	
59025598	59025598	0	REGULATOR	
59025600	59025600	0	LAWNMOWER SUMP	
59025607	59025607	0	DUCT	
59025612	59025612	0	STRIKER PLATE	
59025627	59025627	0	ROD	
59025632	59025632	0	CLEVIS	
59025744	59025744	0	COMPLETE DISC	
59025766	59025766	0	WHEEL SPINDLE	
59025900	59025900	0	PANEL FLAP	
59025910	59025910	0	TUBE	
59219615	59219615	0	WHEEL	
F0810505	F0810505010	0	SPLIT PIN A2,0X201336	

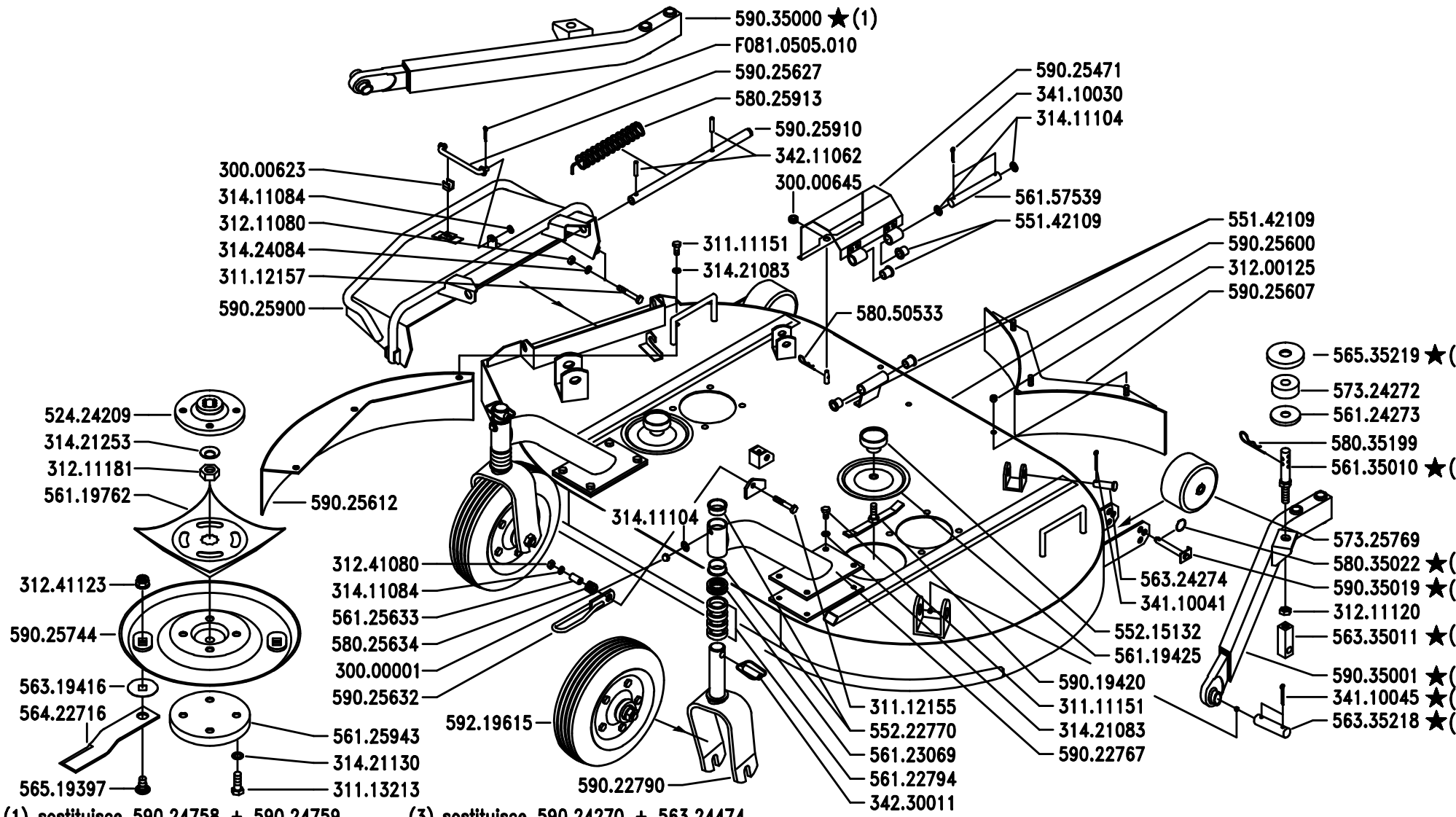

(1) sostituisce 590.24758 + 590.24759
(2) sostituisce 561.25338
(3) sostituisce 590.24270 + 563.24474
(4) sostituisce 590.25766
(5) sostituisce 590.24260

BCS

SERIE

MA.TRA

TOSAERBA SCARICO LATERALE cm.122

MOWER LATERAL UNLOADER cm.122

TONDEUSE À GAZON AVEC DÉCHARGEMENT LATÉRAL cm.122

SEGADORA DE HIERBA EVACUACIÓN LATERAL cm.122

RASENMÄHER SEITLICH ENTLADUNG cm.122

DALLA MACCHINA
DE LA MAQUINA
DE LA MACHINE
FROM THE MACHINE
AB DER MASCHINE

★ N. (1) 1030

P03

3/1999

Pos.	Code	Q.ty	Description	Notes
30000001	30000001	0	LUBRICATOR M10	
30000623	30000623	0	ROD	
30000645	30000645	0	CABLE GLAND 80/110/15	
31111151	31111151	0	SCREW TE M8X16 UNI 5739 8G	
31112155	31112155	0	SCREW TE M8X45 UNI 5739 8G	
31112157	31112157	0	SCREW TE M8X50 UNI 5739 8G	
31113213	31113213	0	SCREW TE M12X20 UNI 5739	
31200125	31200125	0	SELFLOCK NUT M8	
31211080	31211080	0	NUT M8	
31211120	31211120	0	NUT M12 UNI 5588 6S	
31211181	31211181	0	NUT M18X1,5	
31241080	31241080	0	HEXAGON SELFLOCK NUT M8	
31241123	31241123	0	ELFLOCK NUT M12	
31411084	31411084	0	WASHER 8,4x17	
31411104	31411104	0	WASHER 10,5x18	
31421083	31421083	0	WASHER	
31421130	31421130	0	WASHER	
31421253	31421253	0	WASHER	
31424084	31424084	0	SPRING WASHER 8,4	
34110030	34110030	0	SPLIT PIN A3X20 UNI 1336	
34110041	34110041	0	SPLIT PIN A4X25 UNI 1336	
34110045	34110045	0	SPLIT PIN A4X45 UNI 1336	
34211062	34211062	0	ROLL PIN	
34230011	34230011	0	PIN	
52424209	52424209	0	FLANGE	
55142109	55142109	0	BUSHING	
55215132	55215132	0	RING NUT	
55222770	55222770	0	BUSHING	
56119425	56119425	0	COVER	
56119762	56119762	0	CAP	
56122794	56122794	0	SPACER	
56123069	56123069	0	SPACER	
56124273	56124273	0	CUP	
56125633	56125633	0	SPACER	

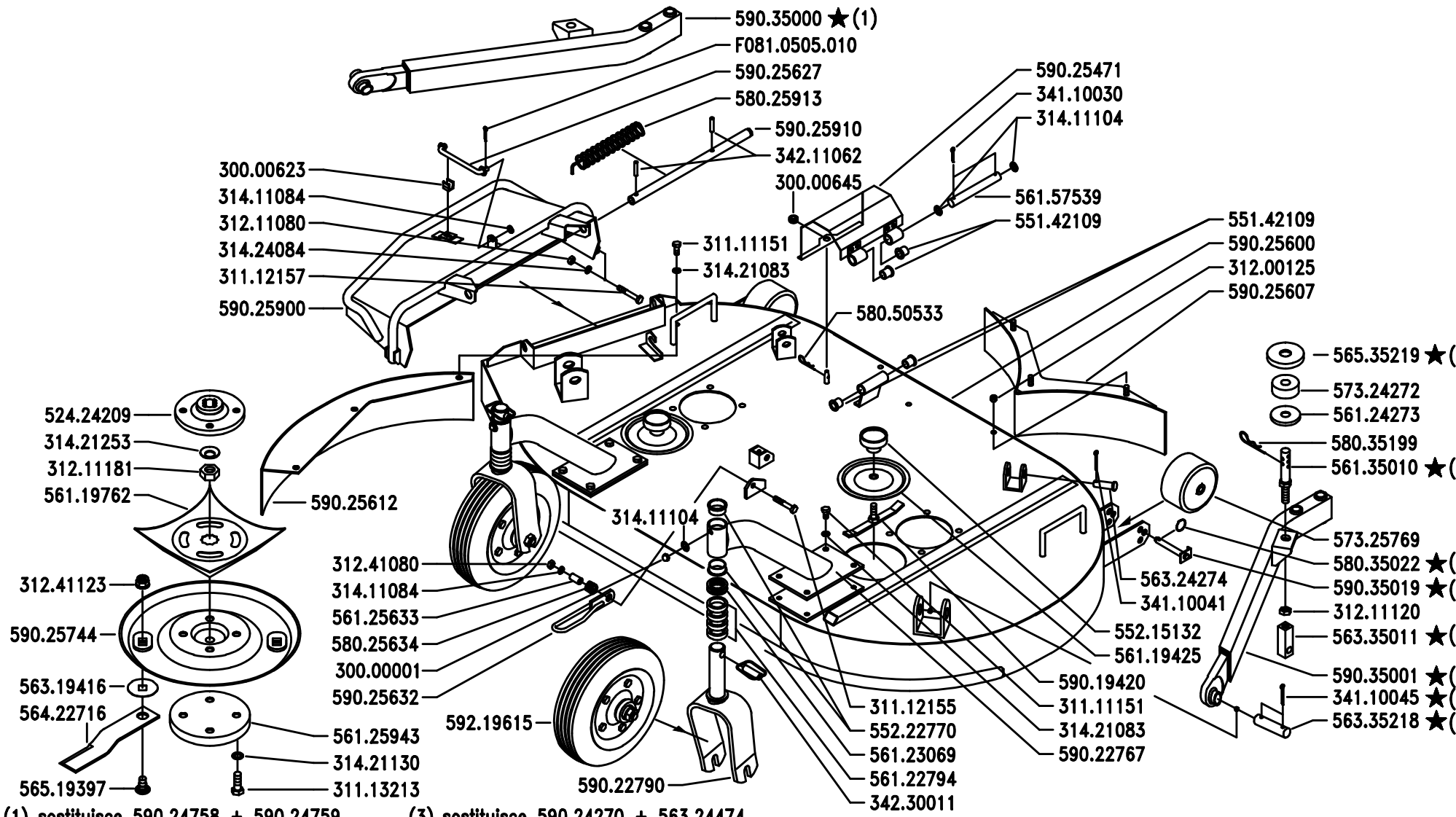

(1) sostituisce 590.24758 + 590.24759
(2) sostituisce 561.25338
(3) sostituisce 590.24270 + 563.24474
(4) sostituisce 590.25766
(5) sostituisce 590.24260

BCS

SERIE

MA.TRA

TOSAERBA SCARICO LATERALE cm.122

MOWER LATERAL UNLOADER cm.122

TONDEUSE À GAZON AVEC DÉCHARGEMENT LATÉRAL cm.122

SEGADORA DE HIERBA EVACUACIÓN LATERAL cm.122

RASENMÄHER SEITLICH ENTLADUNG cm.122

DALLA MACCHINA
DE LA MAQUINA
DE LA MACHINE
FROM THE MACHINE
AB DER MASCHINE

★ N. (1) 1030

P03

3/1999

Pos.	Code	Q.ty	Description	Notes
56125943	56125943	0	CAP	
56135010	56135010	0	PIN	
56157539	56157539	0	PIN	
56319416	56319416	0	WASHER	
56324274	56324274	0	PIN	
56335011	56335011	0	TERMINAL	
56335218	56335218	0	CONNECTING BOLT	
56422716	56422716	0	RIGHT KNIFE	
56519397	56519397	0	PIN	
56535219	56535219	0	CUP	
57324272	57324272	0	STOPPER	
57325769	57325769	0	WHEEL	
58025634	58025634	0	SPRING	
58025913	58025913	0	SPRING	
58035022	58035022	0	RING	
58035199	58035199	0	PIN	
58050533	58050533	0	PIN	
59019420	59019420	0	CROSS MEMBER	
59022767	59022767	0	RIGHT ARM	
59022790	59022790	0	COMPLETE FORK	
59025471	59025471	0	COMPLETE COVER	
59025600	59025600	0	LAWNMOWER SUMP	
59025607	59025607	0	DUCT	
59025612	59025612	0	STRIKER PLATE	
59025627	59025627	0	ROD	
59025632	59025632	0	CLEVIS	
59025744	59025744	0	COMPLETE DISC	
59025900	59025900	0	PANEL FLAP	
59025910	59025910	0	TUBE	
59035000	59035000	0	RIGHT ARM	
59035001	59035001	0	LEFT ARM	
59035019	59035019	0	WHEEL SPINDLE	
59219615	59219615	0	WHEEL	
F0810505	F0810505010	0	SPLIT PIN A2,0X201336	

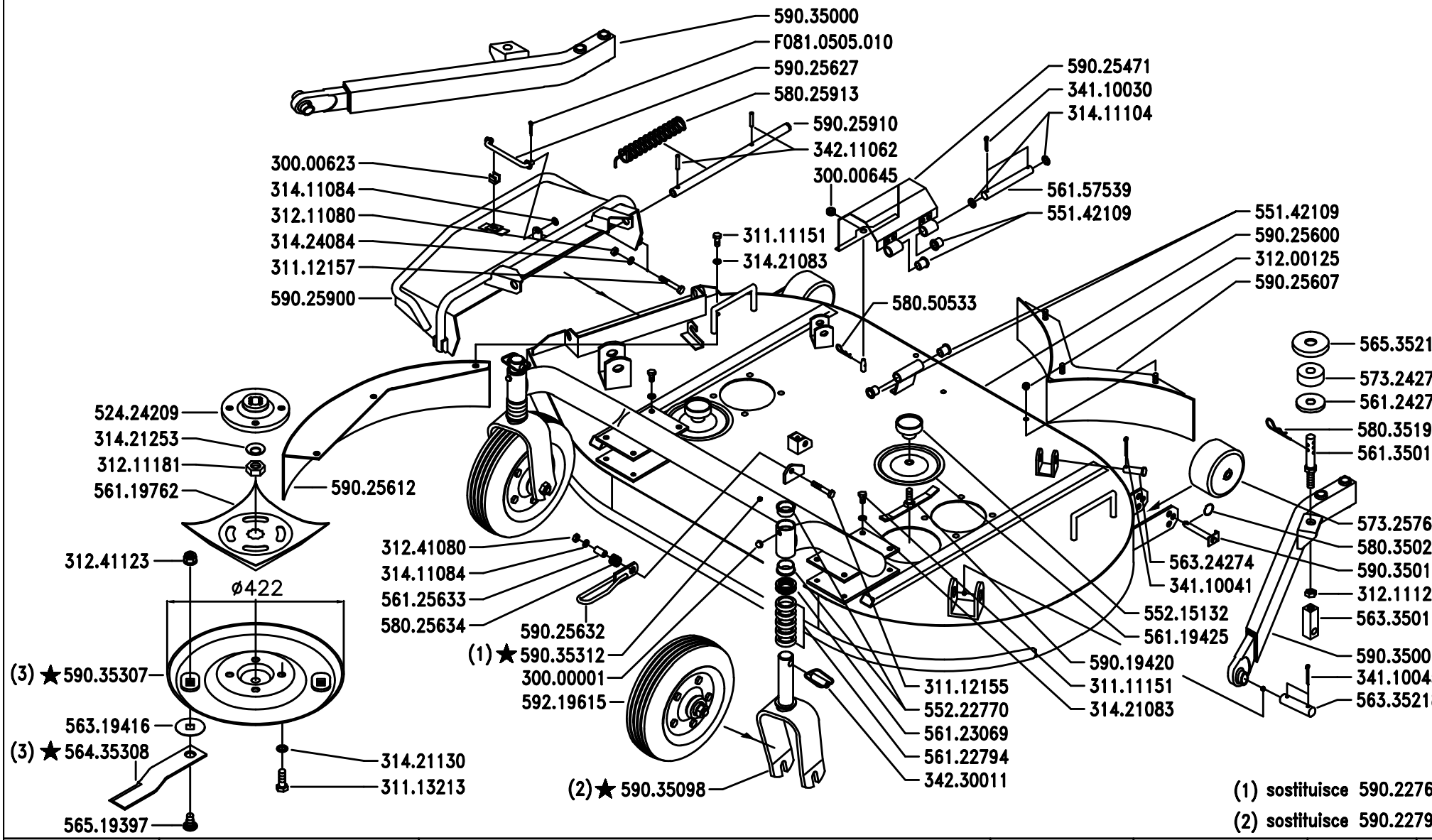

BCS

SERIE

MA.TRA

TOSAERBA SCARICO LATERALE cm.122

MOWER LATERAL UNLOADER cm.122

TONDEUSE À GAZON AVEC DÉCHARGEMENT LATÉRAL cm.122

SEGADORA DE HIERBA EVACUACIÓN LATERAL cm.122

RASENMÄHER SEITLICH ENTLADUNG cm.122

DALLA MACCHINA
DE LA MAQUINA
DE LA MACHINE
FROM THE MACHINE
AB DER MASCHINE

★ N.

(1) 1325
(3) 1239

P03

12/199

Pos.	Code	Q.ty	Description	Notes
30000001	30000001	0	LUBRICATOR M10	
30000623	30000623	0	ROD	
30000645	30000645	0	CABLE GLAND 80/110/15	
31111151	31111151	0	SCREW TE M8X16 UNI 5739 8G	
31112155	31112155	0	SCREW TE M8X45 UNI 5739 8G	
31112157	31112157	0	SCREW TE M8X50 UNI 5739 8G	
31113213	31113213	0	SCREW TE M12X20 UNI 5739	
31200125	31200125	0	SELFLOCK NUT M8	
31211080	31211080	0	NUT M8	
31211120	31211120	0	NUT M12 UNI 5588 6S	
31211181	31211181	0	NUT M18X1,5	
31241080	31241080	0	HEXAGON SELFLOCK NUT M8	
31241123	31241123	0	ELFLOCK NUT M12	
31411084	31411084	0	WASHER 8,4x17	
31411104	31411104	0	WASHER 10,5x18	
31421083	31421083	0	WASHER	
31421130	31421130	0	WASHER	
31421253	31421253	0	WASHER	
31424084	31424084	0	SPRING WASHER 8,4	
34110030	34110030	0	SPLIT PIN A3X20 UNI 1336	
34110041	34110041	0	SPLIT PIN A4X25 UNI 1336	
34110045	34110045	0	SPLIT PIN A4X45 UNI 1336	
34211062	34211062	0	ROLL PIN	
34230011	34230011	0	PIN	
52424209	52424209	0	FLANGE	
55142109	55142109	0	BUSHING	
55215132	55215132	0	RING NUT	
55222770	55222770	0	BUSHING	
56119425	56119425	0	COVER	
56119762	56119762	0	CAP	
56122794	56122794	0	SPACER	
56123069	56123069	0	SPACER	
56124273	56124273	0	CUP	
56125633	56125633	0	SPACER	

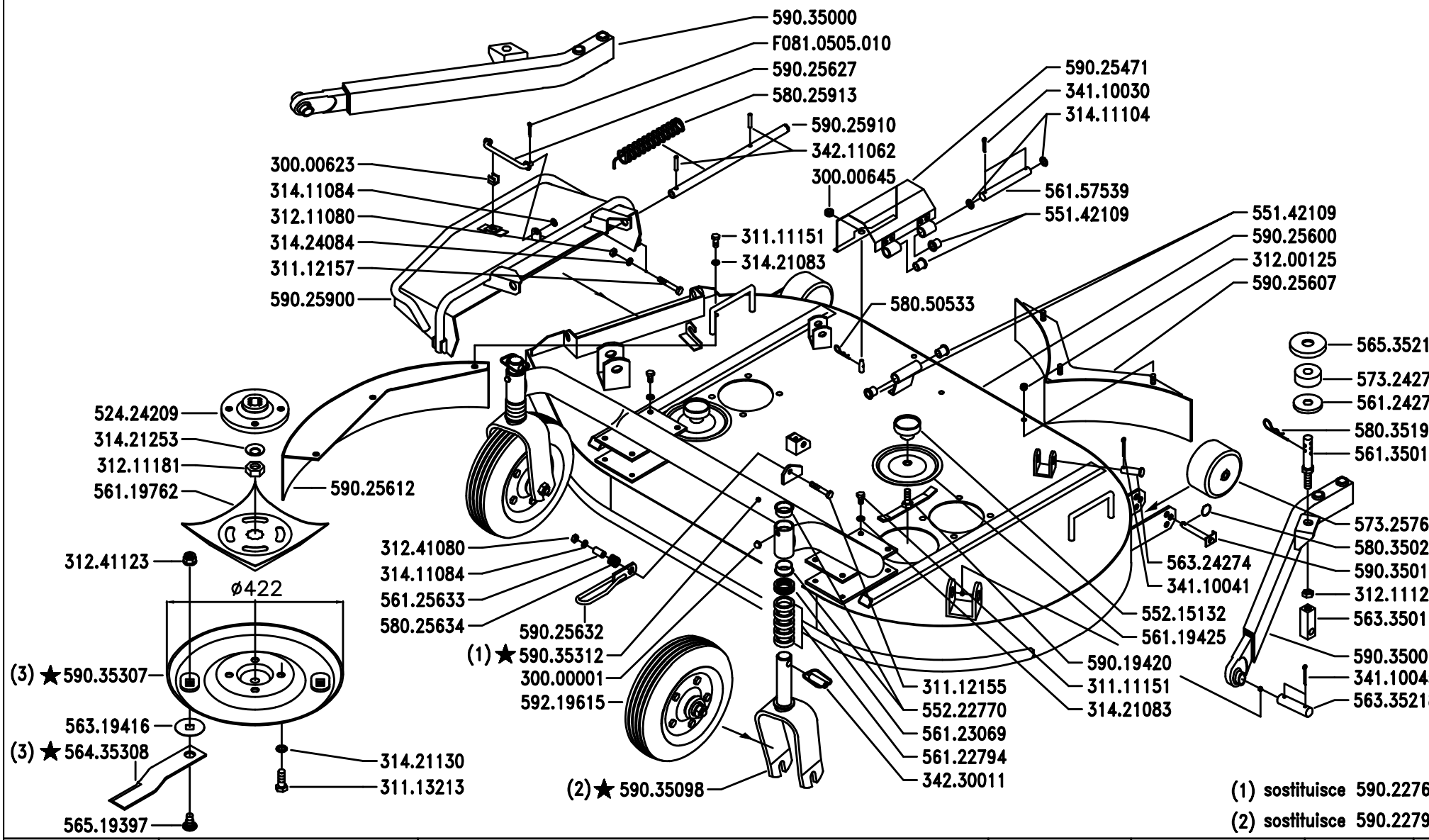

BCS

SERIE

MA.TRA

TOSAERBA SCARICO LATERALE cm.122

MOWER LATERAL UNLOADER cm.122

TONDEUSE À GAZON AVEC DÉCHARGEMENT LATÉRAL cm.122

SEGADORA DE HIERBA EVACUACIÓN LATERAL cm.122

RASENMÄHER SEITLICH ENTLADUNG cm.122

DALLA MACCHINA
DE LA MAQUINA
DE LA MACHINE
FROM THE MACHINE
AB DER MASCHINE

★ N.

(1) 1325
(3) 1239

P03

12/199

Pos.	Code	Q.ty	Description	Notes
56135010	56135010	0	PIN	
56157539	56157539	0	PIN	
56319416	56319416	0	WASHER	
56324274	56324274	0	PIN	
56335011	56335011	0	TERMINAL	
56335218	56335218	0	CONNECTING BOLT	
56435308	56435308	0	RIGHT KNIFE	
56519397	56519397	0	PIN	
56535219	56535219	0	CUP	
57324272	57324272	0	STOPPER	
57325769	57325769	0	WHEEL	
58025634	58025634	0	SPRING	
58025913	58025913	0	SPRING	
58035022	58035022	0	RING	
58035199	58035199	0	PIN	
58050533	58050533	0	PIN	
59019420	59019420	0	CROSS MEMBER	
59025471	59025471	0	COMPLETE COVER	
59025600	59025600	0	LAWNMOWER SUMP	
59025607	59025607	0	DUCT	
59025612	59025612	0	STRIKER PLATE	
59025627	59025627	0	ROD	
59025632	59025632	0	CLEVIS	
59025900	59025900	0	PANEL FLAP	
59025910	59025910	0	TUBE	
59035000	59035000	0	RIGHT ARM	
59035001	59035001	0	LEFT ARM	
59035019	59035019	0	WHEEL SPINDLE	
59035098	59035098	0	COMPLETE FORK	
59035307	59035307	0	COMPLETE DISC	
59035312	59035312	0	WHEEL SUPPORT	
59219615	59219615	0	WHEEL	
F0810505	F0810505010	0	SPLIT PIN A2,0X201336	

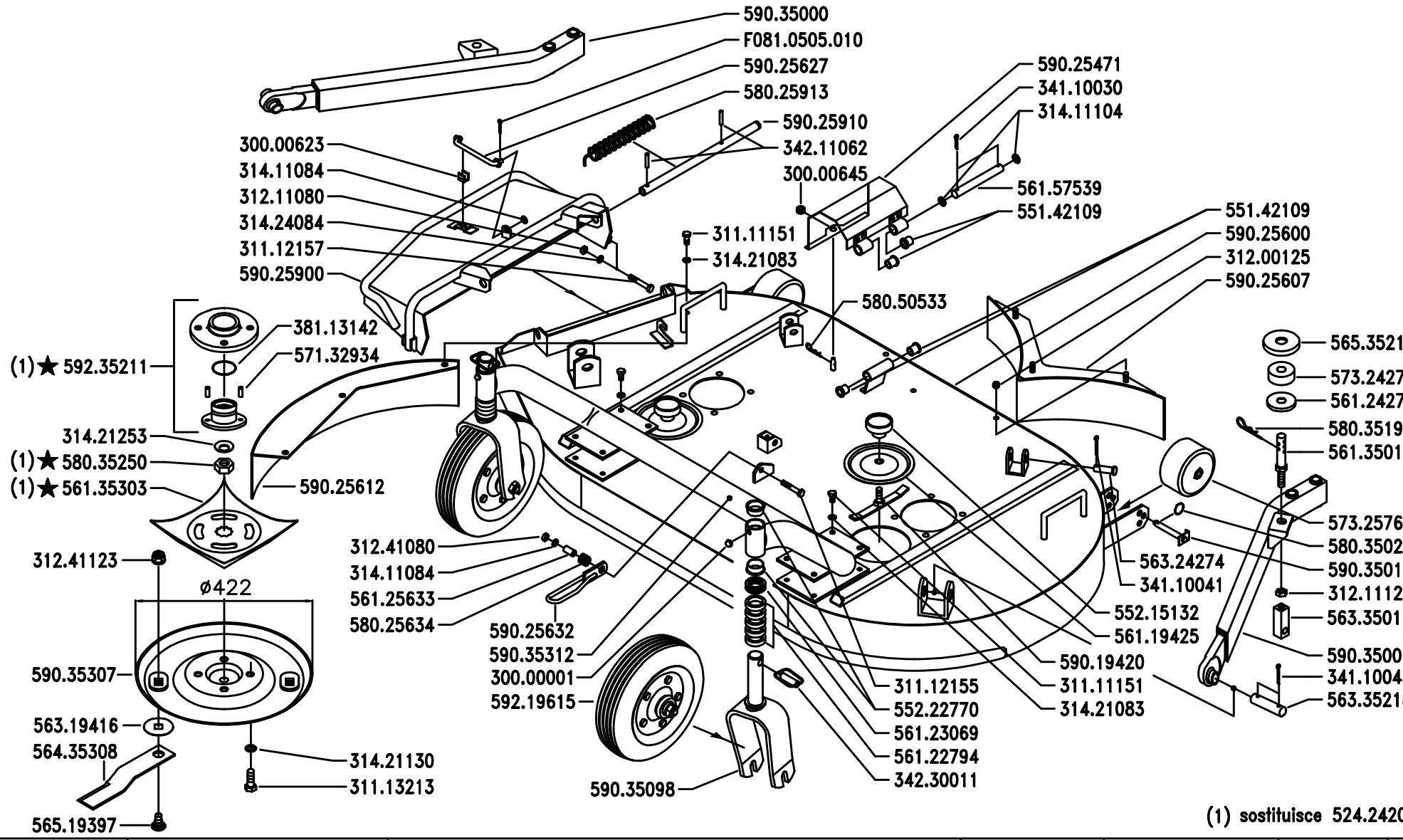

(1) sostituisce 524.2420

BCS

SERIE

MA.TRA

TOSAERBA SCARICO LATERALE cm.122

MOWER LATERAL UNLOADER cm.122

TONDEUSE À GAZON AVEC DÉCHARGEMENT LATÉRAL cm.122

SEGADORA DE HIERBA EVACUACIÓN LATERAL cm.122

RASENMÄHER SEITLICH ENTLADUNG cm.122

DALLA MACCHINA
DE LA MAQUINA
DE LA MACHINE
FROM THE MACHINE
AB DER MASCHINE

★ N. 1632

P03

10/200

Pos.	Code	Q.ty	Description	Notes
30000001	30000001	0	LUBRICATOR M10	
30000623	30000623	0	ROD	
30000645	30000645	0	CABLE GLAND 80/110/15	
31111151	31111151	0	SCREW TE M8X16 UNI 5739 8G	
31112155	31112155	0	SCREW TE M8X45 UNI 5739 8G	
31112157	31112157	0	SCREW TE M8X50 UNI 5739 8G	
31113213	31113213	0	SCREW TE M12X20 UNI 5739	
31200125	31200125	0	SELFLOCK NUT M8	
31211080	31211080	0	NUT M8	
31211120	31211120	0	NUT M12 UNI 5588 6S	
31241080	31241080	0	HEXAGON SELFLOCK NUT M8	
31241123	31241123	0	ELFLOCK NUT M12	
31411084	31411084	0	WASHER 8,4x17	
31411104	31411104	0	WASHER 10,5x18	
31421083	31421083	0	WASHER	
31421130	31421130	0	WASHER	
31421253	31421253	0	WASHER	
31424084	31424084	0	SPRING WASHER 8,4	
34110030	34110030	0	SPLIT PIN A3X20 UNI 1336	
34110041	34110041	0	SPLIT PIN A4X25 UNI 1336	
34110045	34110045	0	SPLIT PIN A4X45 UNI 1336	
34211062	34211062	0	ROLL PIN	
34230011	34230011	0	PIN	
38113142	38113142	0	O-RING OR 3125 (31,42X2,62)	
55142109	55142109	0	BUSHING	
55215132	55215132	0	RING NUT	
55222770	55222770	0	BUSHING	
56119425	56119425	0	COVER	
56122794	56122794	0	SPACER	
56123069	56123069	0	SPACER	
56124273	56124273	0	CUP	
56125633	56125633	0	SPACER	
56135010	56135010	0	PIN	
56135303	56135303	0	CAP	

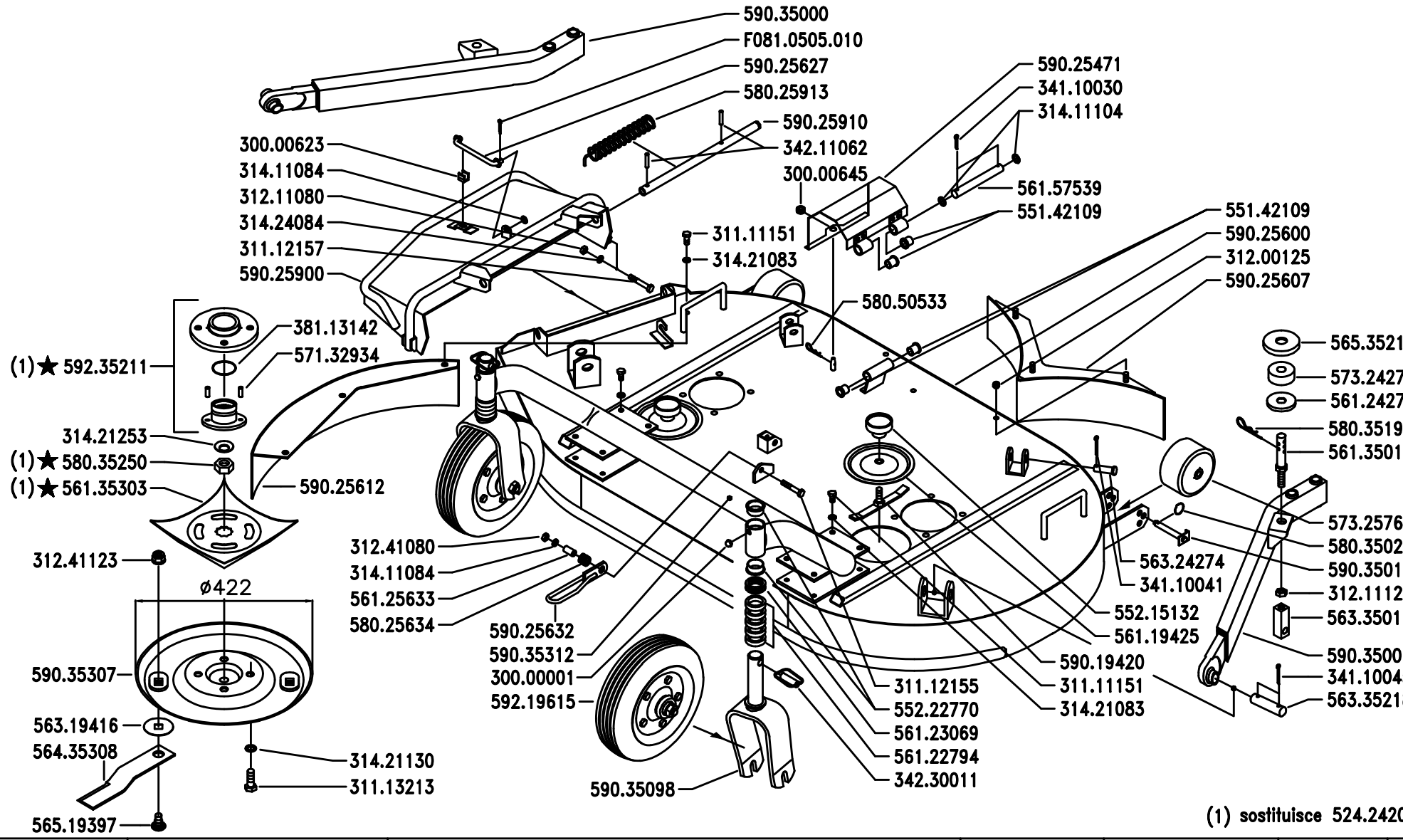

BCS

SERIE

MA.TRA

TOSAERBA SCARICO LATERALE cm.122

MOWER LATERAL UNLOADER cm.122

TONDEUSE À GAZON AVEC DÉCHARGEMENT LATÉRAL cm.122

SEGADORA DE HIERBA EVACUACIÓN LATERAL cm.122

RASENMÄHER SEITLICH ENTLADUNG cm.122

DALLA MACCHINA
DE LA MAQUINA
DE LA MACHINE
FROM THE MACHINE
AB DER MASCHINE

★ N. 1632

P03

10/200

Pos.	Code	Q.ty	Description	Notes
56157539	56157539	0	PIN	
56319416	56319416	0	WASHER	
56324274	56324274	0	PIN	
56335011	56335011	0	TERMINAL	
56335218	56335218	0	CONNECTING BOLT	
56435308	56435308	0	RIGHT KNIFE	
56519397	56519397	0	PIN	
56535219	56535219	0	CUP	
57132934	57132934	0	PIN	
57324272	57324272	0	STOPPER	
57325769	57325769	0	WHEEL	
58025634	58025634	0	SPRING	
58025913	58025913	0	SPRING	
58035022	58035022	0	RING	
58035199	58035199	0	PIN	
58035250	58035250	0	NUT M18x1,5	
58050533	58050533	0	PIN	
59019420	59019420	0	CROSS MEMBER	
59025471	59025471	0	COMPLETE COVER	
59025600	59025600	0	LAWNMOWER SUMP	
59025607	59025607	0	DUCT	
59025612	59025612	0	STRIKER PLATE	
59025627	59025627	0	ROD	
59025632	59025632	0	CLEVIS	
59025900	59025900	0	PANEL FLAP	
59025910	59025910	0	TUBE	
59035000	59035000	0	RIGHT ARM	
59035001	59035001	0	LEFT ARM	
59035019	59035019	0	WHEEL SPINDLE	
59035098	59035098	0	COMPLETE FORK	
59035307	59035307	0	COMPLETE DISC	
59035312	59035312	0	WHEEL SUPPORT	
59219615	59219615	0	WHEEL	
59235211	59235211	0	FLANGE	

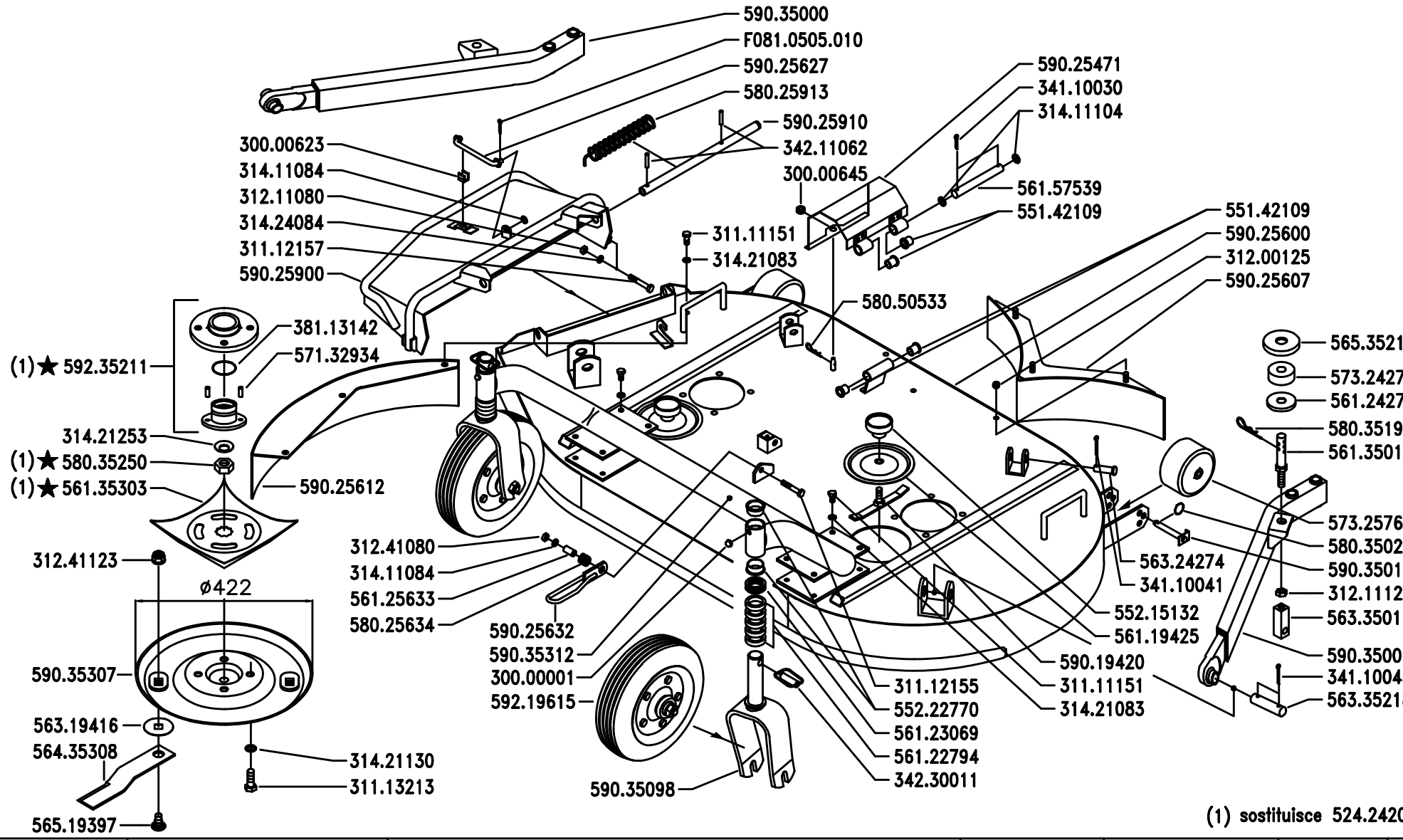

(1) sostituisce 524.2420

BCS

SERIE

MA.TRA

TOSAERBA SCARICO LATERALE cm.122

MOWER LATERAL UNLOADER cm.122

TONDEUSE À GAZON AVEC DÉCHARGEMENT LATÉRAL cm.122

SEGADORA DE HIERBA EVACUACIÓN LATERAL cm.122

RASENMÄHER SEITLICH ENTLADUNG cm.122

DALLA MACCHINA
DE LA MAQUINA
DE LA MACHINE
FROM THE MACHINE
AB DER MASCHINE

★ N. 1632

P03

10/200

Pos.	Code	Q.ty	Description	Notes
F0810505	F0810505010	0	SPLIT PIN A2,0X201336	

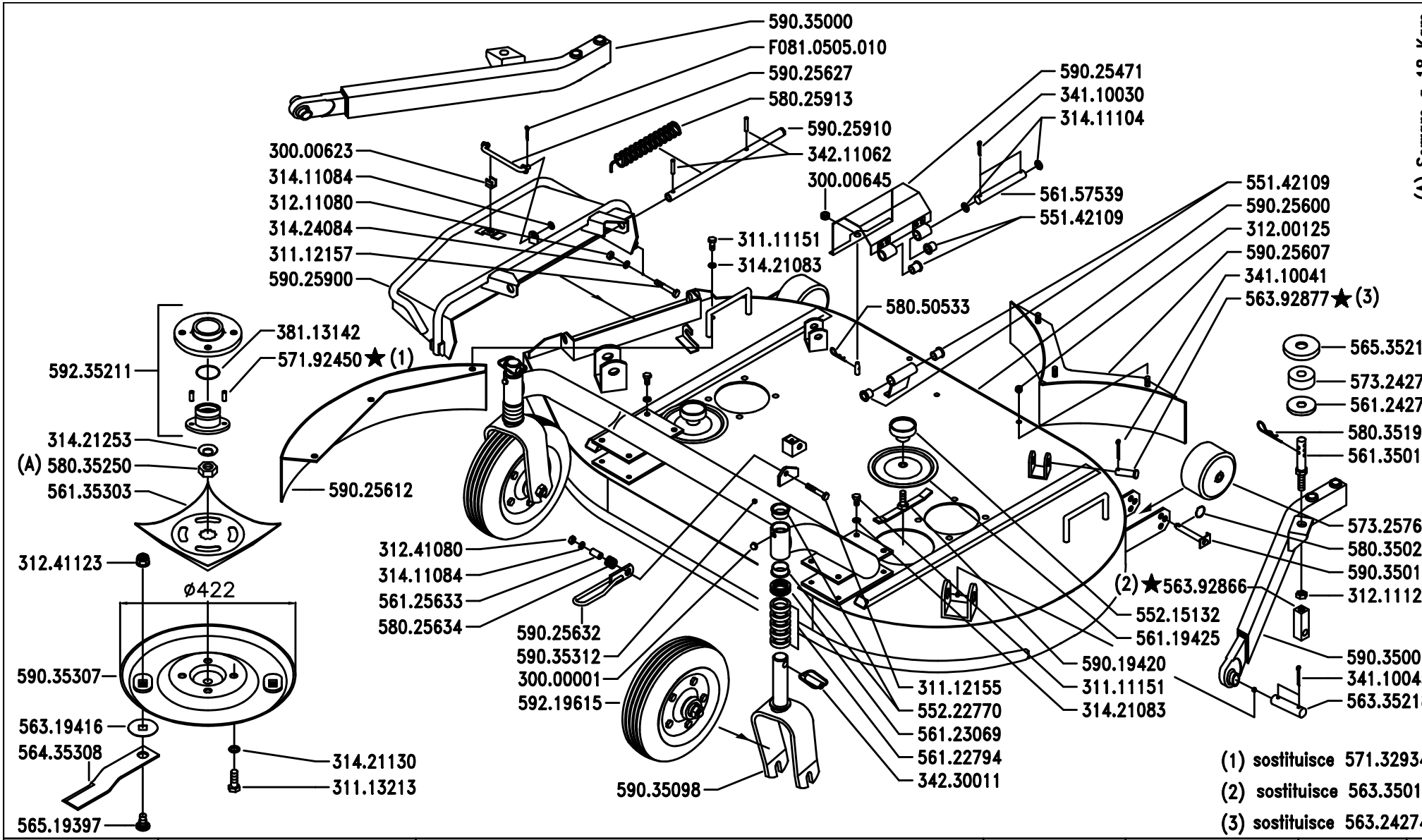

BCS

SERIE

MA.TRA

TOSAERBA SCARICO LATERALE cm.122

MOWER LATERAL UNLOADER cm.122

TONDEUSE À GAZON AVEC DÉCHARGEMENT LATÉRAL cm.122

SEGADORA DE HIERBA EVACUACIÓN LATERAL cm.122

RASENMÄHER SEITLICH ENTLADUNG cm.122

DALLA MACCHINA
DE LA MAQUINA
DE LA MACHINE
FROM THE MACHINE
AB DER MASCHINE

★ N.

AGGIORNAMENTO
APLAZAMIENTO
MISE A JOUR
REVISION
ANPASSUNG

P03

4/2003

Pos.	Code	Q.ty	Description	Notes
30000001	30000001	0	LUBRICATOR M10	
30000623	30000623	0	ROD	
30000645	30000645	0	CABLE GLAND 80/110/15	
31111151	31111151	0	SCREW TE M8X16 UNI 5739 8G	
31112155	31112155	0	SCREW TE M8X45 UNI 5739 8G	
31112157	31112157	0	SCREW TE M8X50 UNI 5739 8G	
31113213	31113213	0	SCREW TE M12X20 UNI 5739	
31200125	31200125	0	SELFLOCK NUT M8	
31211080	31211080	0	NUT M8	
31211120	31211120	0	NUT M12 UNI 5588 6S	
31241080	31241080	0	HEXAGON SELFLOCK NUT M8	
31241123	31241123	0	ELFLOCK NUT M12	
31411084	31411084	0	WASHER 8,4x17	
31411104	31411104	0	WASHER 10,5x18	
31421083	31421083	0	WASHER	
31421130	31421130	0	WASHER	
31421253	31421253	0	WASHER	
31424084	31424084	0	SPRING WASHER 8,4	
34110030	34110030	0	SPLIT PIN A3X20 UNI 1336	
34110041	34110041	0	SPLIT PIN A4X25 UNI 1336	
34110045	34110045	0	SPLIT PIN A4X45 UNI 1336	
34211062	34211062	0	ROLL PIN	
34230011	34230011	0	PIN	
38113142	38113142	0	O-RING OR 3125 (31,42X2,62)	
55142109	55142109	0	BUSHING	
55215132	55215132	0	RING NUT	
55222770	55222770	0	BUSHING	
56119425	56119425	0	COVER	
56122794	56122794	0	SPACER	
56123069	56123069	0	SPACER	
56124273	56124273	0	CUP	
56125633	56125633	0	SPACER	
56135010	56135010	0	PIN	
56135303	56135303	0	CAP	

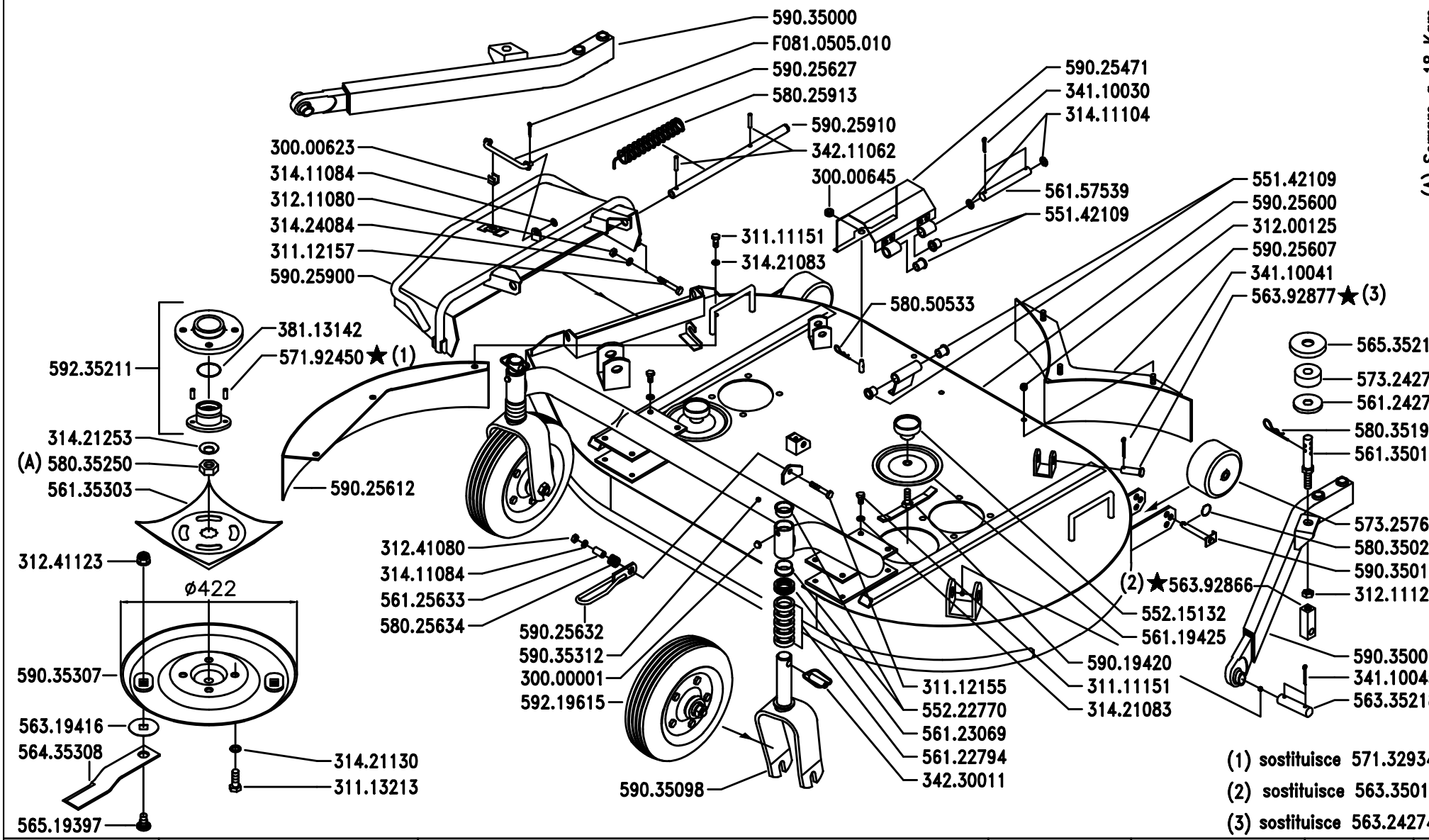

(1) sostituisce 571.3293
(2) sostituisce 563.3501
(3) sostituisce 563.2427

BCS

SERIE

MA.TRA

TOSAERBA SCARICO LATERALE cm.122

MOWER LATERAL UNLOADER cm.122

TONDEUSE À GAZON AVEC DÉCHARGEMENT LATÉRAL cm.122

SEGADORA DE HIERBA EVACUACIÓN LATERAL cm.122

RASENMÄHER SEITLICH ENTLADUNG cm.122

DALLA MACCHINA
DE LA MAQUINA
DE LA MACHINE
FROM THE MACHINE
AB DER MASCHINE

★ N.

AGGIORNAMENTO
APLAZAMIENTO
MISE A JOUR
REVISION
ANPASSUNG

P03

4/2003

Pos.	Code	Q.ty	Description	Notes
56157539	56157539	0	PIN	
56319416	56319416	0	WASHER	
56335218	56335218	0	CONNECTING BOLT	
56392866	56392866	1	TERMINAL	
56392877	56392877	1	PIN	
56435308	56435308	0	RIGHT KNIFE	
56519397	56519397	0	PIN	
56535219	56535219	0	CUP	
57192450	57192450	1	PIN	
57324272	57324272	0	STOPPER	
57325769	57325769	0	WHEEL	
58025634	58025634	0	SPRING	
58025913	58025913	0	SPRING	
58035022	58035022	0	RING	
58035199	58035199	0	PIN	
58035250	58035250	0	NUT M18x1,5	
58050533	58050533	0	PIN	
59019420	59019420	0	CROSS MEMBER	
59025471	59025471	0	COMPLETE COVER	
59025600	59025600	0	LAWNMOWER SUMP	
59025607	59025607	0	DUCT	
59025612	59025612	0	STRIKER PLATE	
59025627	59025627	0	ROD	
59025632	59025632	0	CLEVIS	
59025900	59025900	0	PANEL FLAP	
59025910	59025910	0	TUBE	
59035000	59035000	0	RIGHT ARM	
59035001	59035001	0	LEFT ARM	
59035019	59035019	0	WHEEL SPINDLE	
59035098	59035098	0	COMPLETE FORK	
59035307	59035307	0	COMPLETE DISC	
59035312	59035312	0	WHEEL SUPPORT	
59219615	59219615	0	WHEEL	
59235211	59235211	0	FLANGE	

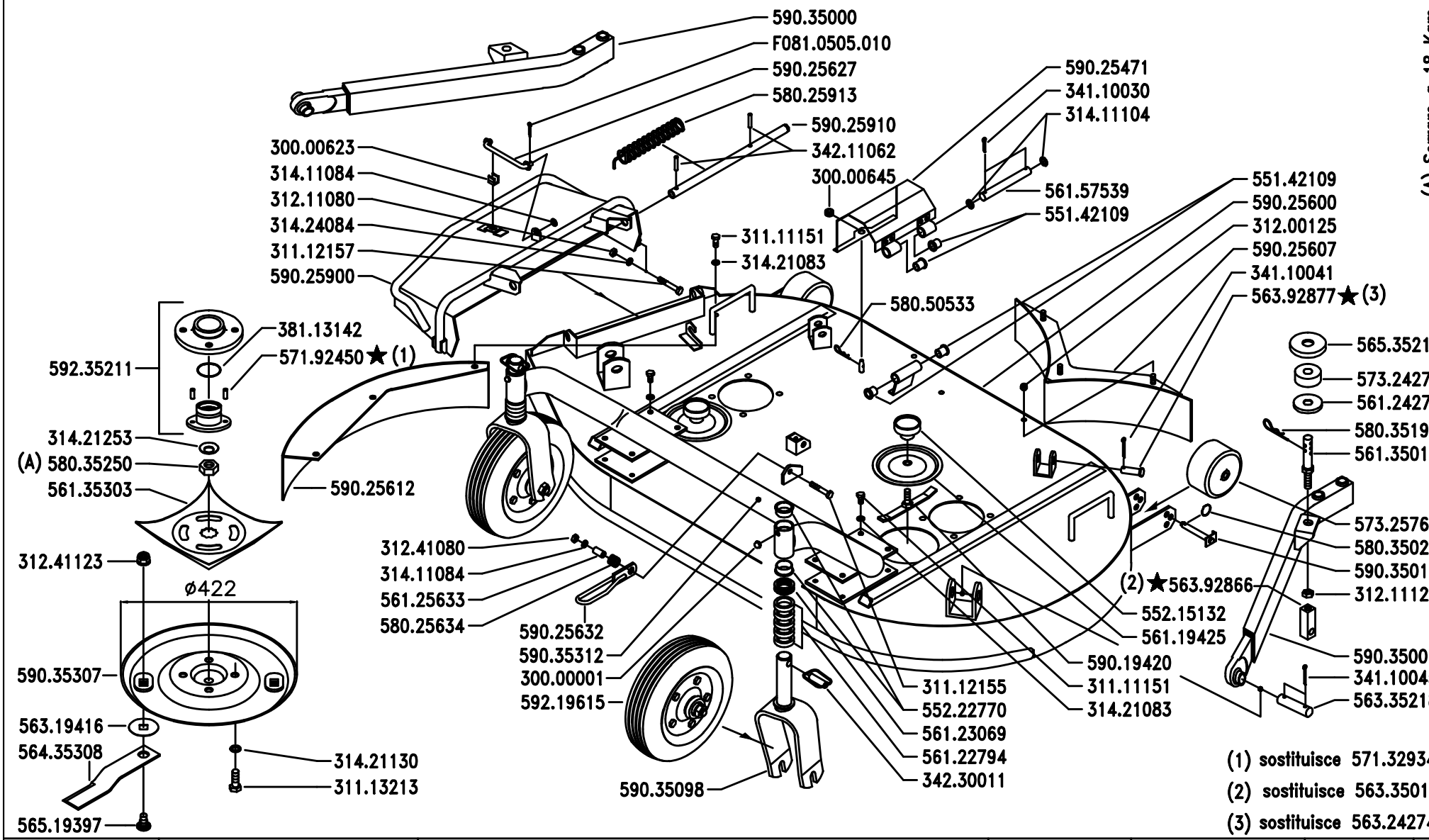

BCS

SERIE

MA.TRA

TOSAERBA SCARICO LATERALE cm.122

MOWER LATERAL UNLOADER cm.122

TONDEUSE À GAZON AVEC DÉCHARGEMENT LATÉRAL cm.122

SEGADORA DE HIERBA EVACUACIÓN LATERAL cm.122

RASENMÄHER SEITLICH ENTLADUNG cm.122

DALLA MACCHINA
DE LA MAQUINA
DE LA MACHINE
FROM THE MACHINE
AB DER MASCHINE

★ N.

AGGIORNAMENTO
APLAZAMIENTO
MISE A JOUR
REVISION
ANPASSUNG

P03

4/2003

Pos.	Code	Q.ty	Description	Notes
F0810505	F0810505010	0	SPLIT PIN A2,0X201336	

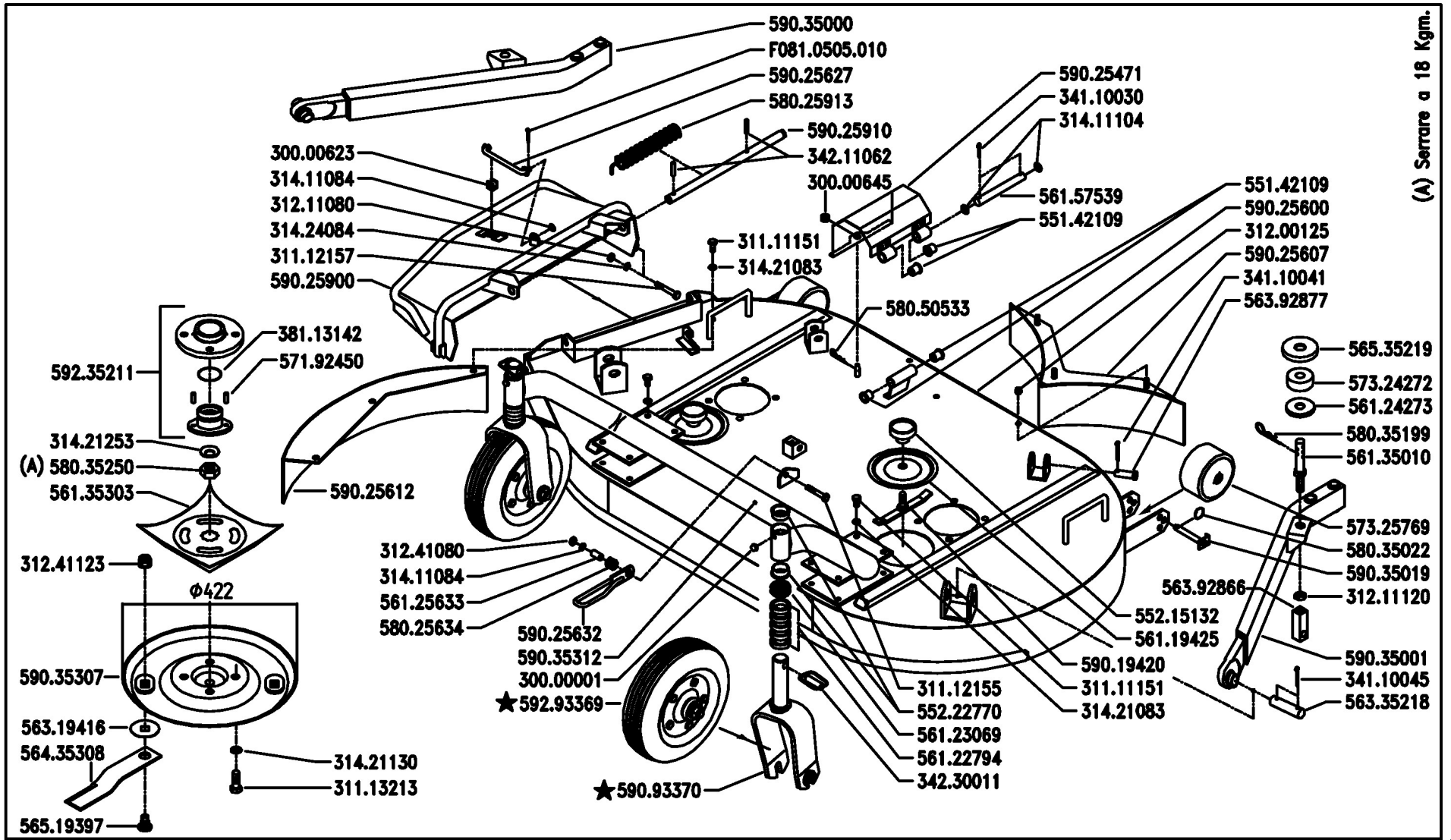

BCS	SERIE MA.TRA	TOSAERBA SCARICO LATERALE cm.122 MOWER LATERAL UNLOADER cm.122 TONDEUSE À GAZON AVEC DÉCHARGEMENT LATÉRAL cm.122 SEGADORA DE HIERBA EVACUACIÓN LATERAL cm.122 RASENMÄHER SEITLICH ENTLADUNG cm.122	DALLA MACCHINA DE LA MAQUINA DE LA MACHINE FROM THE MACHINE AB DER MASCHINE ★ N.	755413	P03 Rev. 6 01/2006

DIFF - BCS 32803T068

Pos.	Code	Q.ty	Description	Notes
30000001	30000001	1	LUBRICATOR M10	
30000623	30000623	1	ROD	
30000645	30000645	1	CABLE GLAND 80/110/15	
31111151	31111151	1	SCREW TE M8X16 UNI 5739 8G	
31112155	31112155	1	SCREW TE M8X45 UNI 5739 8G	
31112157	31112157	1	SCREW TE M8X50 UNI 5739 8G	
31113213	31113213	1	SCREW TE M12X20 UNI 5739	
31200125	31200125	1	SELFLOCK NUT M8	
31211080	31211080	1	NUT M8	
31211120	31211120	1	NUT M12 UNI 5588 6S	
31241080	31241080	1	HEXAGON SELFLOCK NUT M8	
31241123	31241123	1	ELFLOCK NUT M12	
31411084	31411084	1	WASHER 8,4x17	
31411104	31411104	1	WASHER 10,5x18	
31421083	31421083	1	WASHER	
31421130	31421130	1	WASHER	
31421253	31421253	1	WASHER	
31424084	31424084	1	SPRING WASHER 8,4	
34110030	34110030	1	SPLIT PIN A3X20 UNI 1336	
34110041	34110041	1	SPLIT PIN A4X25 UNI 1336	
34110045	34110045	1	SPLIT PIN A4X45 UNI 1336	
34211062	34211062	1	ROLL PIN	
34230011	34230011	1	PIN	
38113142	38113142	1	O-RING OR 3125 (31,42X2,62)	
55142109	55142109	1	BUSHING	
55215132	55215132	1	RING NUT	
55222770	55222770	1	BUSHING	
56119425	56119425	1	COVER	
56122794	56122794	1	SPACER	
56123069	56123069	1	SPACER	
56124273	56124273	1	CUP	
56125633	56125633	1	SPACER	
56135010	56135010	1	PIN	
56135303	56135303	1	CAP	

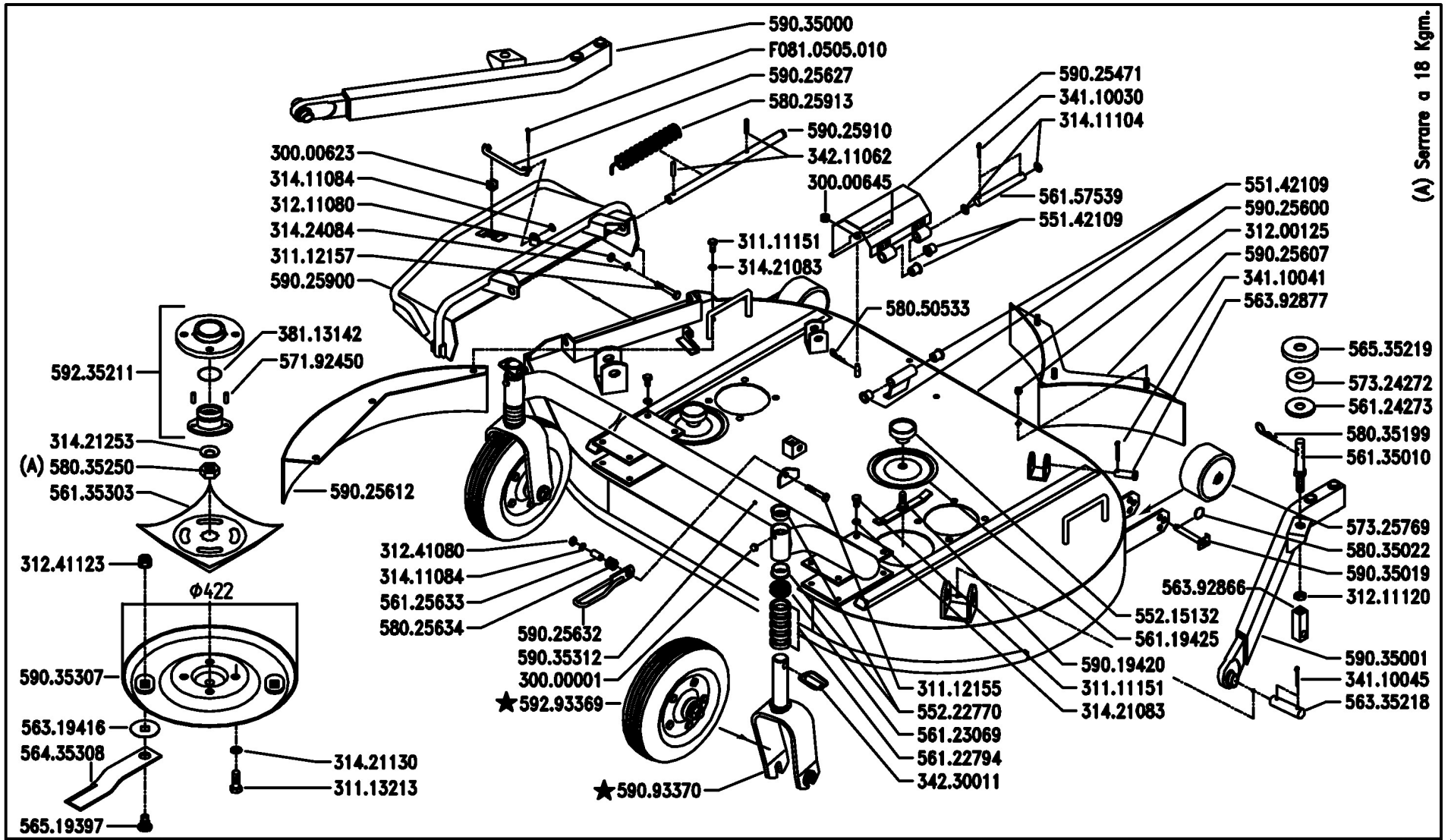

BCS	SERIE MA.TRA	TOSAERBA SCARICO LATERALE cm.122 MOWER LATERAL UNLOADER cm.122 TONDEUSE À GAZON AVEC DÉCHARGEMENT LATÉRAL cm.122 SEGADORA DE HIERBA EVACUACIÓN LATERAL cm.122 RASENMÄHER SEITLICH ENTLADUNG cm.122	DALLA MACCHINA DE LA MAQUINA DE LA MACHINE FROM THE MACHINE AB DER MASCHINE ★ N.	755413	P03 Rev. 6 01/2006

DIFF - BCS 32803T068

Pos.	Code	Q.ty	Description	Notes
56157539	56157539	1	PIN	
56319416	56319416	1	WASHER	
56335218	56335218	1	CONNECTING BOLT	
56392866	56392866	1	TERMINAL	
56392877	56392877	1	PIN	
56435308	56435308	1	RIGHT KNIFE	
56519397	56519397	1	PIN	
56535219	56535219	1	CUP	
57192450	57192450	1	PIN	
57324272	57324272	1	STOPPER	
57325769	57325769	1	WHEEL	
58025634	58025634	1	SPRING	
58025913	58025913	1	SPRING	
58035022	58035022	1	RING	
58035199	58035199	1	PIN	
58035250	58035250	1	NUT M18x1,5	
58050533	58050533	1	PIN	
59019420	59019420	1	CROSS MEMBER	
59025471	59025471	1	COMPLETE COVER	
59025600	59025600	1	LAWNMOWER SUMP	
59025607	59025607	1	DUCT	
59025612	59025612	1	STRIKER PLATE	
59025627	59025627	1	ROD	
59025632	59025632	1	CLEVIS	
59025900	59025900	1	PANEL FLAP	
59025910	59025910	1	TUBE	
59035000	59035000	1	RIGHT ARM	
59035001	59035001	1	LEFT ARM	
59035019	59035019	1	WHEEL SPINDLE	
59035307	59035307	1	COMPLETE DISC	
59035312	59035312	1	WHEEL SUPPORT	
59093370	59093370	1	COMPLETE FORK	
59235211	59235211	1	FLANGE	
59293369	59293369	1	WHEEL	

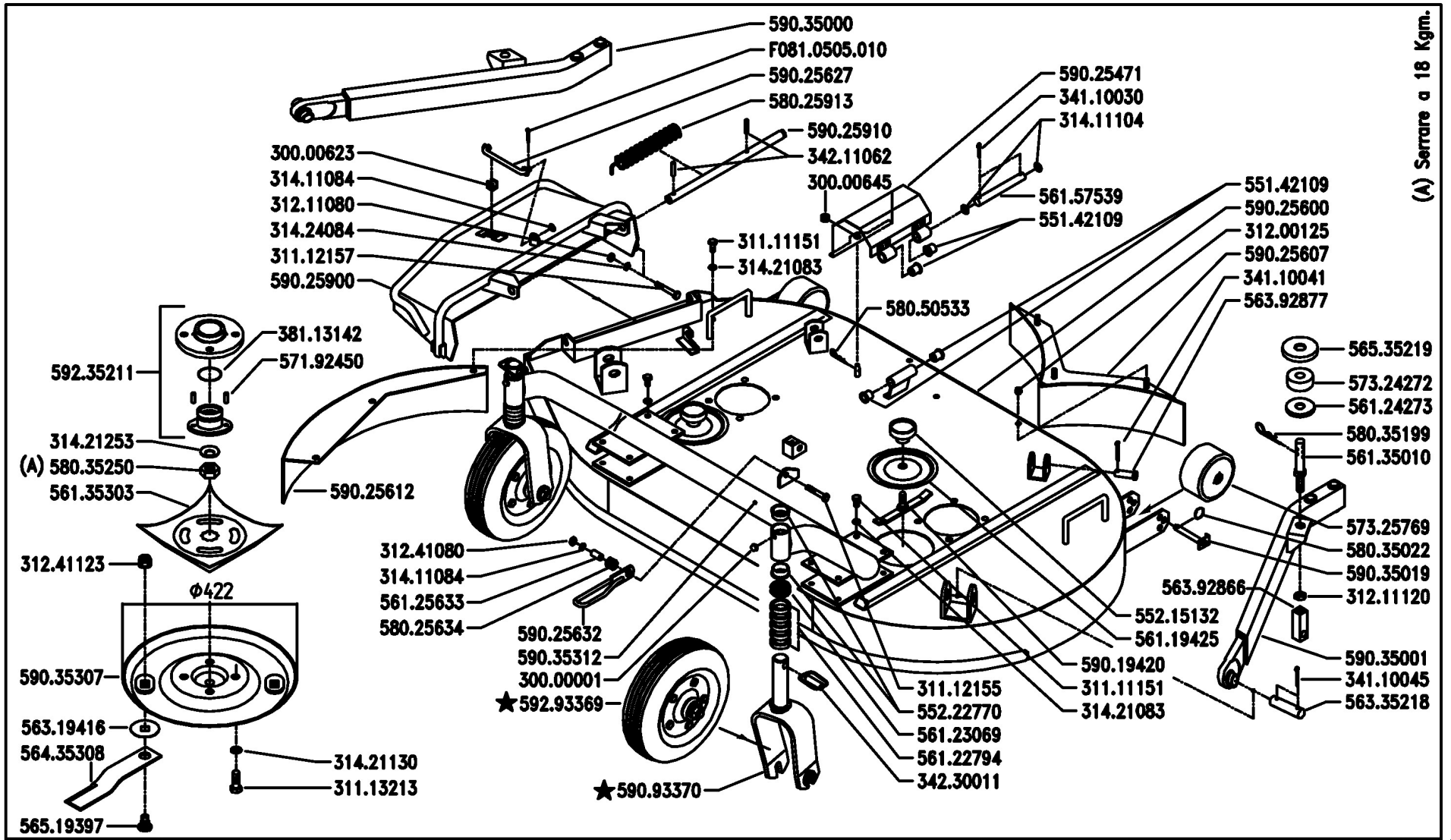

BCS	SERIE MA.TRA	TOSAERBA SCARICO LATERALE cm.122 MOWER LATERAL UNLOADER cm.122 TONDEUSE À GAZON AVEC DÉCHARGEMENT LATÉRAL cm.122 SEGADORA DE HIERBA EVACUACIÓN LATERAL cm.122 RASENMÄHER SEITLICH ENTLADUNG cm.122	DALLA MACCHINA DE LA MAQUINA DE LA MACHINE FROM THE MACHINE AB DER MASCHINE ★ N.	755413	P03 Rev. 6 01/2006

DIFF - BCS 32803T068

Pos.	Code	Q.ty	Description	Notes
F0810505	F0810505010	1	SPLIT PIN A2,0X201336	

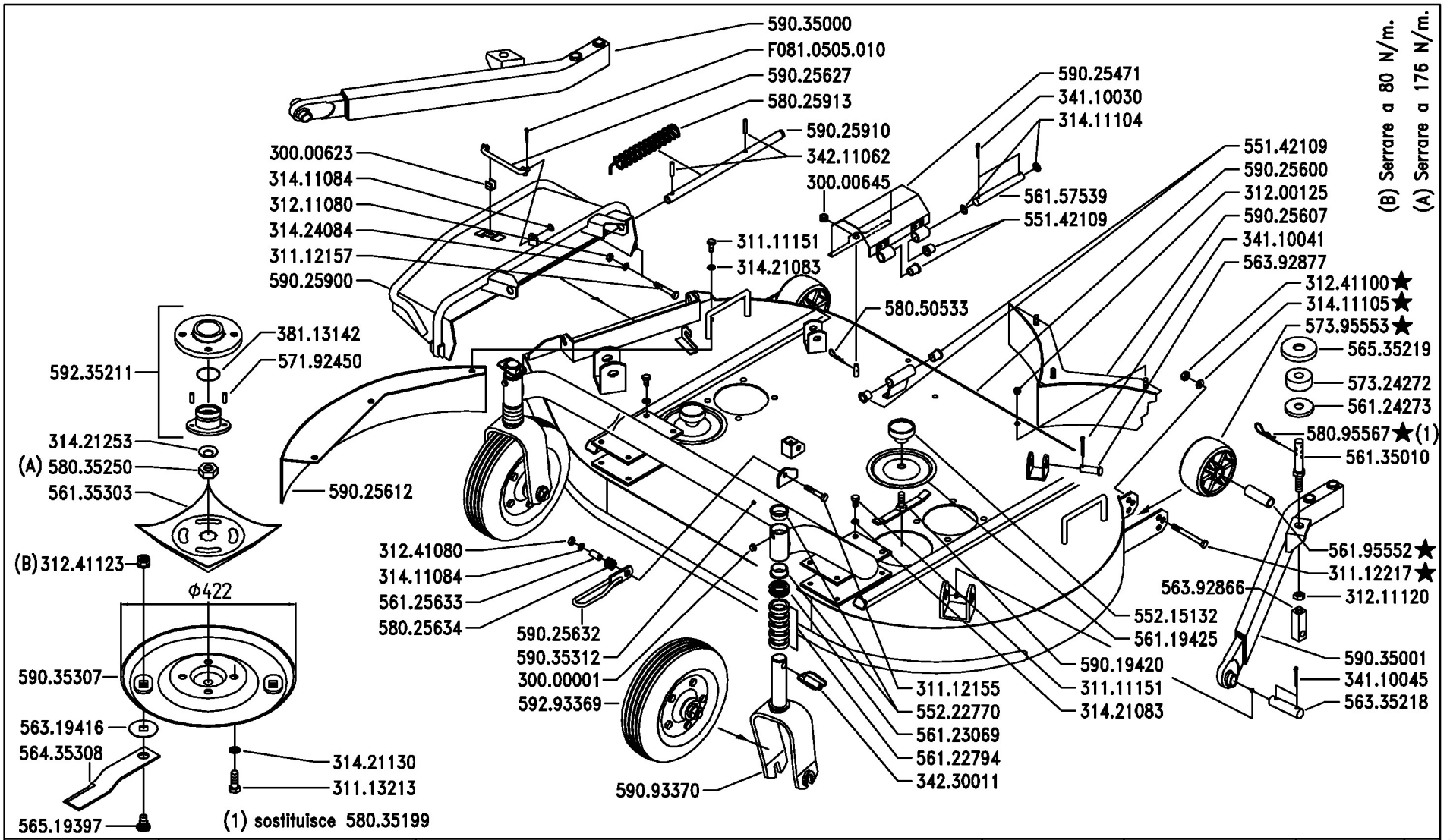

BCS	SERIE MA.TRA	TOSAERBA SCARICO LATERALE cm.122 MOWER LATERAL UNLOADER cm.122 TONDEUSE À GAZON AVEC DÉCHARGEMENT LATÉRAL cm.122 SEGADORA DE HIERBA EVACUACIÓN LATERAL cm.122 RASENMÄHER SEITLICH ENTLADUNG cm.122	DALLA MACCHINA DE LA MAQUINA DE LA MACHINE FROM THE MACHINE AB DER MASCHINE ★ N.	375069	P03 Rev. 7 07/2008

DITE - BCS 32P03T07R

Pos.	Code	Q.ty	Description	Notes
30000001	30000001	1	LUBRICATOR M10	
30000623	30000623	1	ROD	
30000645	30000645	1	CABLE GLAND 80/110/15	
31111151	31111151	1	SCREW TE M8X16 UNI 5739 8G	
31112155	31112155	1	SCREW TE M8X45 UNI 5739 8G	
31112157	31112157	1	SCREW TE M8X50 UNI 5739 8G	
31112217	31112217	1	SCREW TE M10X80 UNI 5737	
31113213	31113213	1	SCREW TE M12X20 UNI 5739	
31200125	31200125	1	SELFLOCK NUT M8	
31211080	31211080	1	NUT M8	
31211120	31211120	1	NUT M12 UNI 5588 6S	
31241080	31241080	1	HEXAGON SELFLOCK NUT M8	
31241100	31241100	1	SELFLOCK HEXAGON NUT M10	
31241123	31241123	1	ELFLOCK NUT M12	
31411084	31411084	1	WASHER 8,4x17	
31411104	31411104	1	WASHER 10,5x18	
31411105	31411105	1	WASHER 10,5x21	
31421083	31421083	1	WASHER	
31421130	31421130	1	WASHER	
31421253	31421253	1	WASHER	
31424084	31424084	1	SPRING WASHER 8,4	
34110030	34110030	1	SPLIT PIN A3X20 UNI 1336	
34110041	34110041	1	SPLIT PIN A4X25 UNI 1336	
34110045	34110045	1	SPLIT PIN A4X45 UNI 1336	
34211062	34211062	1	ROLL PIN	
34230011	34230011	1	PIN	
38113142	38113142	1	O-RING OR 3125 (31,42X2,62)	
55142109	55142109	1	BUSHING	
55215132	55215132	1	RING NUT	
55222770	55222770	1	BUSHING	
56119425	56119425	1	COVER	
56122794	56122794	1	SPACER	
56123069	56123069	1	SPACER	
56124273	56124273	1	CUP	

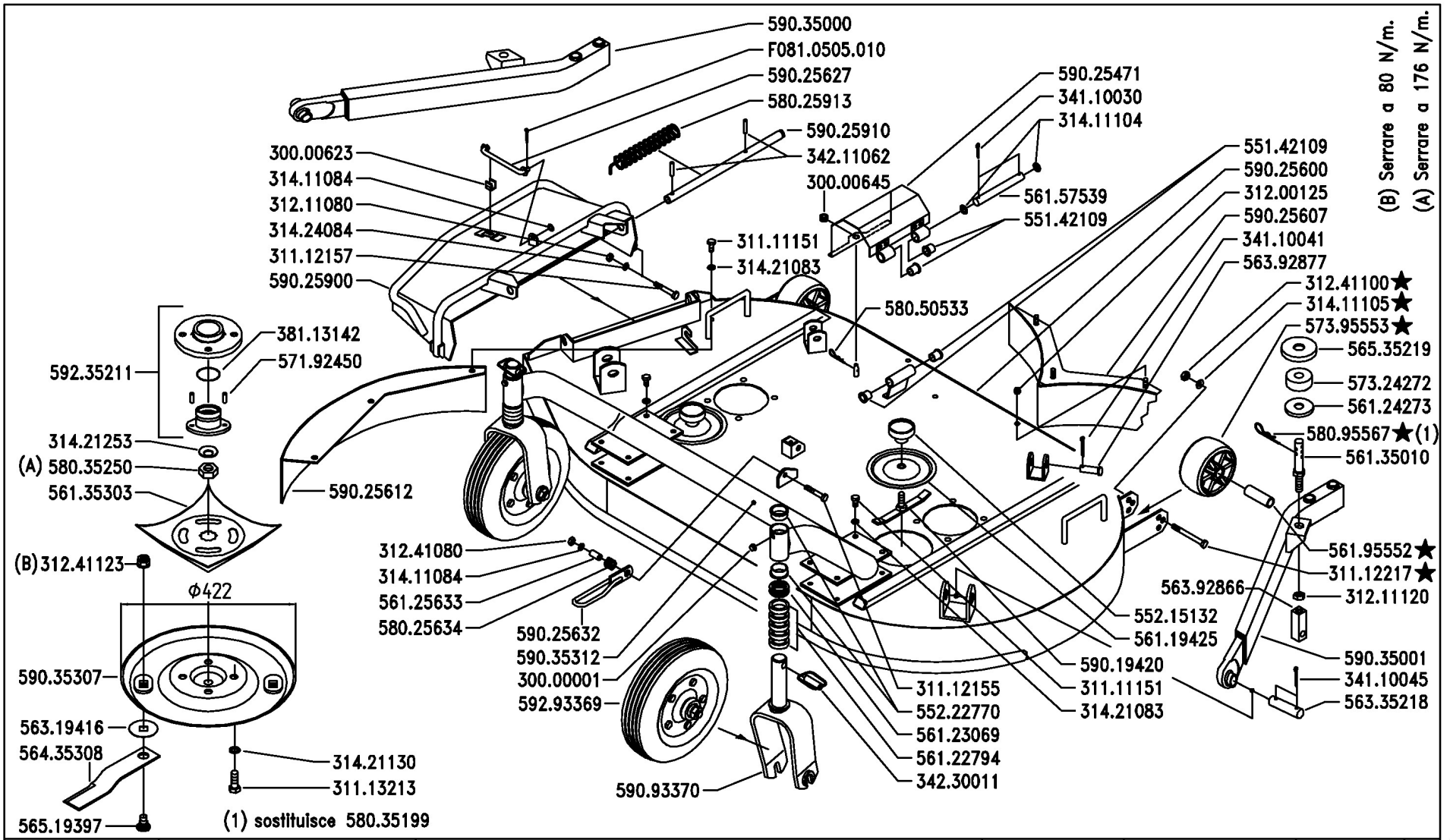

BCS	SERIE MA.TRA	TOSAERBA SCARICO LATERALE cm.122 MOWER LATERAL UNLOADER cm.122 TONDEUSE À GAZON AVEC DÉCHARGEMENT LATÉRAL cm.122 SEGADORA DE HIERBA EVACUACIÓN LATERAL cm.122 RASENMÄHER SEITLICH ENTLADUNG cm.122	DALLA MACCHINA DE LA MAQUINA DE LA MACHINE FROM THE MACHINE AB DER MASCHINE ★ N.	375069	P03 Rev. 7 07/2008

DITE - BCS 32P03T07B

Pos.	Code	Q.ty	Description	Notes
56125633	56125633	1	SPACER	
56135010	56135010	1	PIN	
56135303	56135303	1	CAP	
56157539	56157539	1	PIN	
56195552	56195552	1	SPACER	
56319416	56319416	1	WASHER	
56335218	56335218	1	CONNECTING BOLT	
56392866	56392866	1	TERMINAL	
56392877	56392877	1	PIN	
56435308	56435308	1	RIGHT KNIFE	
56519397	56519397	1	PIN	
56535219	56535219	1	CUP	
57192450	57192450	1	PIN	
57324272	57324272	1	STOPPER	
57325769	57325769	1	WHEEL	
57395553	57395553	1	WHEEL	
58025634	58025634	1	SPRING	
58025913	58025913	1	SPRING	
58035250	58035250	1	NUT M18x1,5	
58050533	58050533	1	PIN	
58095567	58095567	1	PIN	
59019420	59019420	1	CROSS MEMBER	
59025471	59025471	1	COMPLETE COVER	
59025600	59025600	1	LAWNMOWER SUMP	
59025607	59025607	1	DUCT	
59025612	59025612	1	STRIKER PLATE	
59025627	59025627	1	ROD	
59025632	59025632	1	CLEVIS	
59025900	59025900	1	PANEL FLAP	
59025910	59025910	1	TUBE	
59035000	59035000	1	RIGHT ARM	
59035001	59035001	1	LEFT ARM	
59035307	59035307	1	COMPLETE DISC	
59035312	59035312	1	WHEEL SUPPORT	

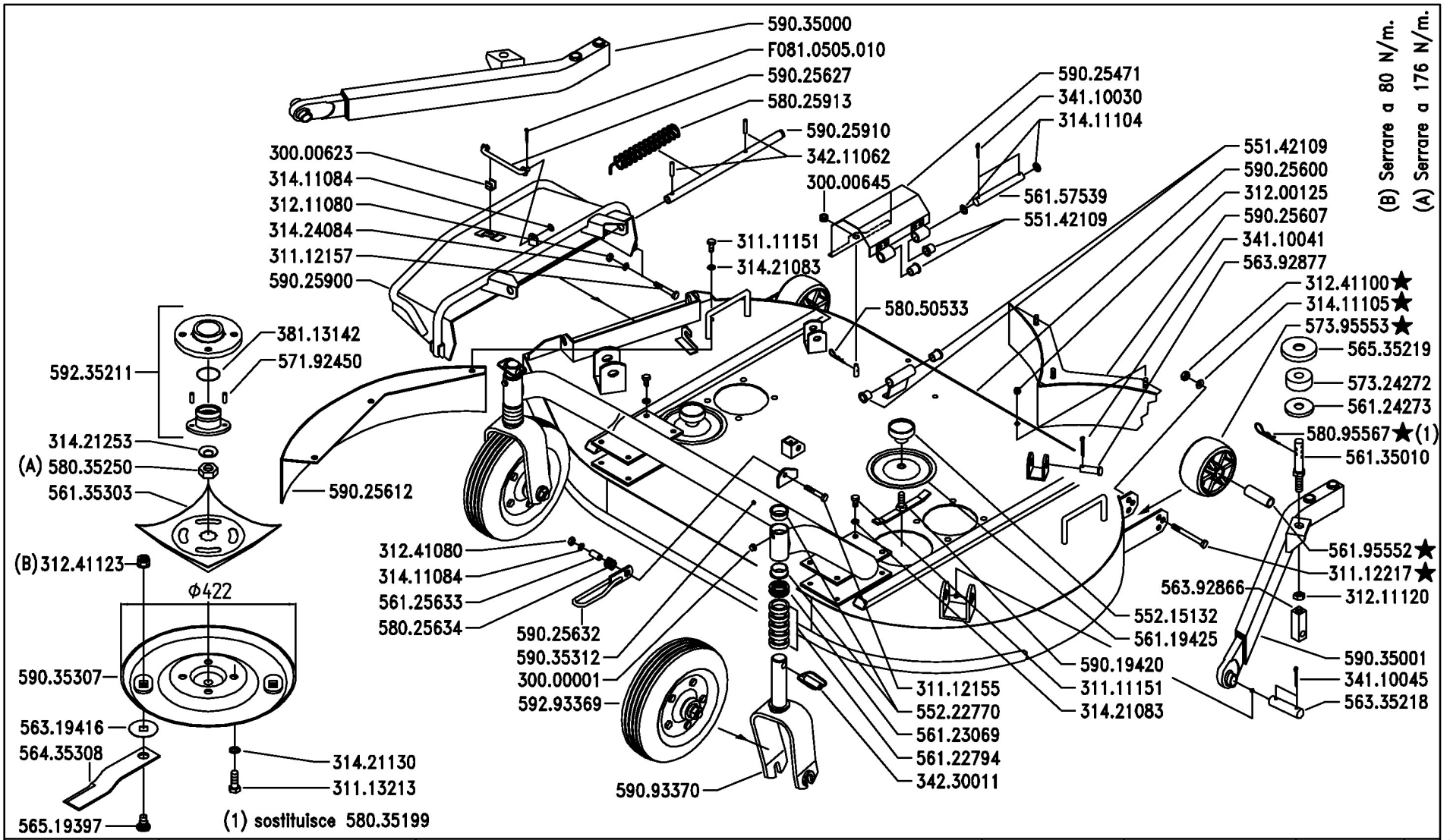

BCS	SERIE MA.TRA	TOSAERBA SCARICO LATERALE cm.122 MOWER LATERAL UNLOADER cm.122 TONDEUSE À GAZON AVEC DÉCHARGEMENT LATÉRAL cm.122 SEGADORA DE HIERBA EVACUACIÓN LATERAL cm.122 RASENMÄHER SEITLICH ENTLADUNG cm.122	DALLA MACCHINA DE LA MAQUINA DE LA MACHINE FROM THE MACHINE AB DER MASCHINE ★ N.	375069	P03 Rev. 7 07/2008

DITE - BCS 32P03T07B

Pos.	Code	Q.ty	Description	Notes
59093370	59093370	1	COMPLETE FORK	
59235211	59235211	1	FLANGE	
59293369	59293369	1	WHEEL	
F0810505	F0810505010	1	SPLIT PIN A2,0X201336	

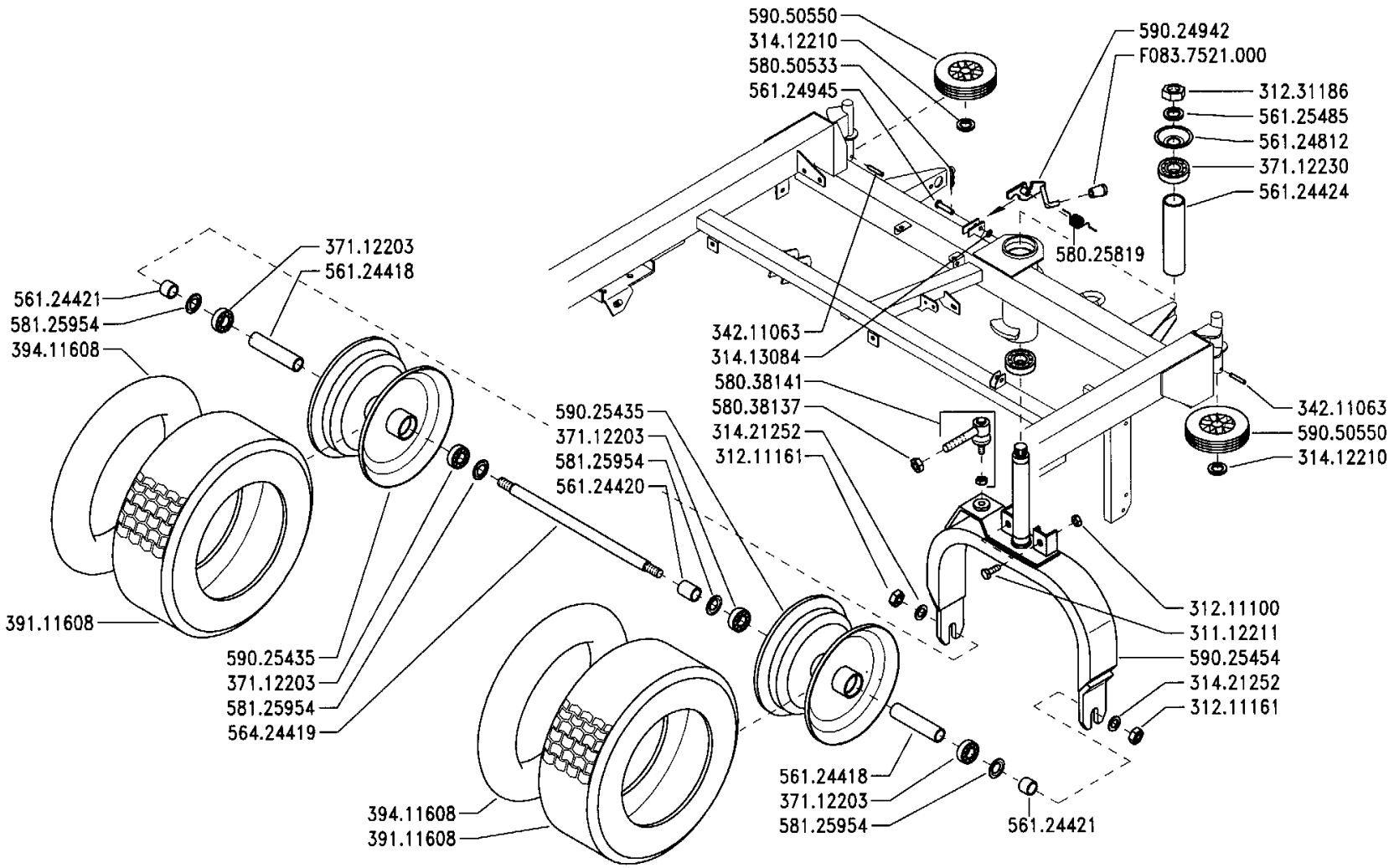

BCS	SERIE MA.TRA	RUOTE POSTERIORI REAR WHEELS / ROUES POSTÉRIEURES RUEDAS TRASERAS / HINTERRÄDER	DALLA MACCHINA DE LA MAQUINA DE LA MACHINE FROM THE MACHINE AB DER MASCHINE N.	PRODUZIONE 1998 PRODUCCIÓN 1998 PRODUCTION 1998 PRODUCTION 1998 PRODUKTION 1998	Q01 1/1999	Mod. 0

Pos.	Code	Q.ty	Description	Notes
31112211	31112211	0	SCREW TE M10X30 UNI 5739	
31211100	31211100	0	NUT M10	
31211161	31211161	0	NUT M16X1,5	
31231186	31231186	0	NUT M22	
31412210	31412210	0	WASHER 21	
31413084	31413084	0	WASHER 8,4	
31421252	31421252	0	WASHER	
34211063	34211063	0	ROLL PIN	
37112203	37112203	0	BEARING 6004-2RS (20X42X12)	
37112230	37112230	0	BEARING 6006-2RS1 (305513) SKF	
39111608	39111608	0	TYRE 16X6.50-8 4PR	
39411608	39411608	0	INNER TUBE PER 16-6.50-8	
56124418	56124418	0	SPACER	
56124420	56124420	0	SPACER	
56124421	56124421	0	SPACER	
56124424	56124424	0	BUSHING 32,2x38H156	
56124812	56124812	0	BOTTOM	
56124945	56124945	0	PIN	
56125485	56125485	0	WASHER 23x35/4	
56424419	56424419	0	WHEEL SPINDLE	
58025819	58025819	0	SPRING	
58038137	58038137	0	SPECIAL NUT M14X1	
58038141	58038141	0	HEAD	
58050533	58050533	0	PIN	
58125954	58125954	0	OUTER RING	
59024942	59024942	0	LATCH	
59025435	59025435	0	RIM	
59025454	59025454	0	FORK	
59050550	59050550	0	WHEEL	
F0837521	F0837521000	0	GRIP	

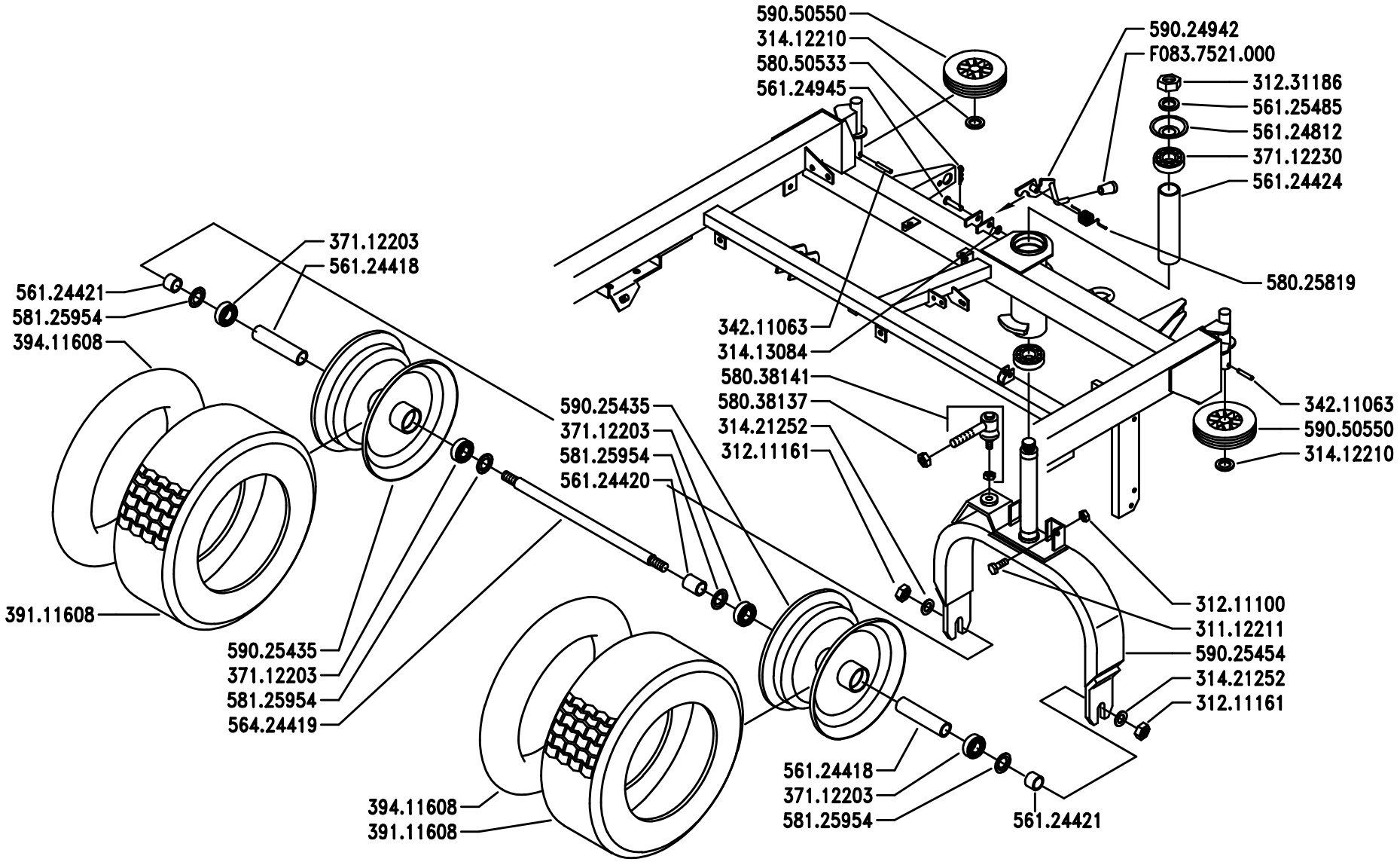

BCS

SERIE

MA.TRA

RUOTE POSTERIORI (MT100 – MT101 – MT104)

REAR WHEELS (MT100 – MT101 – MT104)

ROUES POSTÉRIEURES (MT100 – MT101 – MT104)

RUADES TRASERAS (MT100 – MT101 – MT104)

HINTERRÄDER (MT100 – MT101 – MT104)

DALLA MACCHINA
DE LA MAQUINA
DE LA MACHINE
FROM THE MACHINE
AB DER MASCHINE

N.

Sostituisce	Q01/0
Sostituye	Q01/0
Remplace	Q01/0
Replaces	Q01/0
Ersätzt	Q01/0

Q01

2/199

Pos.	Code	Q.ty	Description	Notes
31112211	31112211	0	SCREW TE M10X30 UNI 5739	
31211100	31211100	0	NUT M10	
31211161	31211161	0	NUT M16X1,5	
31231186	31231186	0	NUT M22	
31412210	31412210	0	WASHER 21	
31413084	31413084	0	WASHER 8,4	
31421252	31421252	0	WASHER	
34211063	34211063	0	ROLL PIN	
37112203	37112203	0	BEARING 6004-2RS (20X42X12)	
37112230	37112230	0	BEARING 6006-2RS1 (305513) SKF	
39111608	39111608	0	TYRE 16X6.50-8 4PR	
39411608	39411608	0	INNER TUBE PER 16-6.50-8	
56124418	56124418	0	SPACER	
56124420	56124420	0	SPACER	
56124421	56124421	0	SPACER	
56124424	56124424	0	BUSHING 32,2x38H156	
56124812	56124812	0	BOTTOM	
56124945	56124945	0	PIN	
56125485	56125485	0	WASHER 23x35/4	
56424419	56424419	0	WHEEL SPINDLE	
58025819	58025819	0	SPRING	
58038137	58038137	0	SPECIAL NUT M14X1	
58038141	58038141	0	HEAD	
58050533	58050533	0	PIN	
58125954	58125954	0	OUTER RING	
59024942	59024942	0	LATCH	
59025435	59025435	0	RIM	
59025454	59025454	0	FORK	
59050550	59050550	0	WHEEL	
F0837521	F0837521000	0	GRIP	

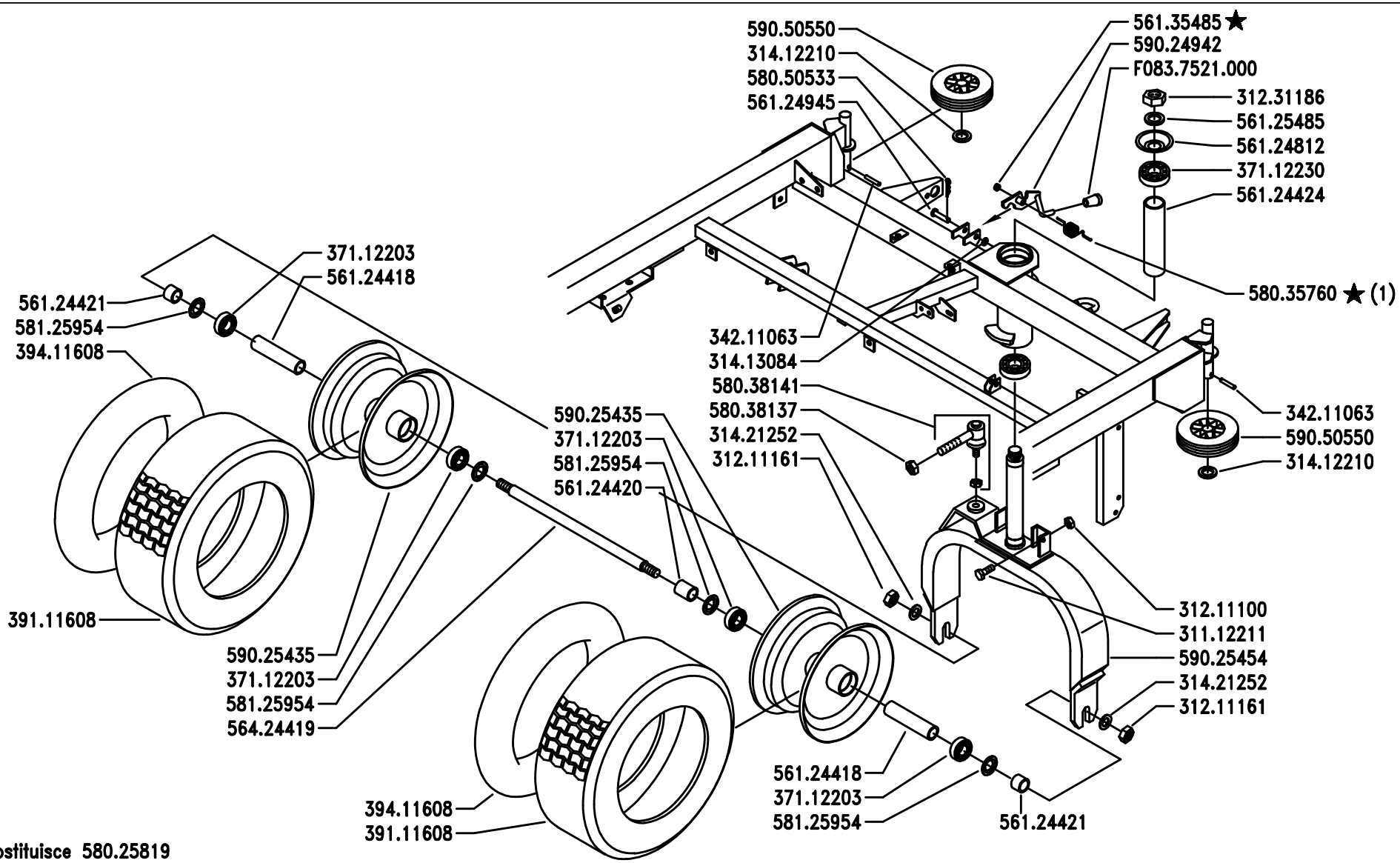

(1) sostituisce 580.25819

BCS	SERIE MA.TRA	RUOTE POSTERIORI (MT100 – MT101 – MT104) REAR WHEELS (MT100 – MT101 – MT104) ROUES POSTÉRIEURES (MT100 – MT101 – MT104) RUADES TRASERAS (MT100 – MT101 – MT104) HINTERRÄDER (MT100 – MT101 – MT104)	DALLA MACCHINA DE LA MAQUINA DE LA MACHINE FROM THE MACHINE AB DER MASCHINE ★ N.	AGGIORNAMENTO APLAZAMIENTO MISE A JOUR REVISION ANPASSUNG	Q01 7/2000

Pos.	Code	Q.ty	Description	Notes
31112211	31112211	0	SCREW TE M10X30 UNI 5739	
31211100	31211100	0	NUT M10	
31211161	31211161	0	NUT M16X1,5	
31231186	31231186	0	NUT M22	
31412210	31412210	0	WASHER 21	
31413084	31413084	0	WASHER 8,4	
31421252	31421252	0	WASHER	
34211063	34211063	0	ROLL PIN	
37112203	37112203	0	BEARING 6004-2RS (20X42X12)	
37112230	37112230	0	BEARING 6006-2RS1 (305513) SKF	
39111608	39111608	0	TYRE 16X6.50-8 4PR	
39411608	39411608	0	INNER TUBE PER 16-6.50-8	
56124418	56124418	0	SPACER	
56124420	56124420	0	SPACER	
56124421	56124421	0	SPACER	
56124424	56124424	0	BUSHING 32,2x38H156	
56124812	56124812	0	BOTTOM	
56124945	56124945	0	PIN	
56125485	56125485	0	WASHER 23x35/4	
56135485	56135485	0	SPACER	
56424419	56424419	0	WHEEL SPINDLE	
58035760	58035760	0	SPRING	
58038137	58038137	0	SPECIAL NUT M14X1	
58038141	58038141	0	HEAD	
58050533	58050533	0	PIN	
58125954	58125954	0	OUTER RING	
59024942	59024942	0	LATCH	
59025435	59025435	0	RIM	
59025454	59025454	0	FORK	
59050550	59050550	0	WHEEL	
F0837521	F0837521000	0	GRIP	

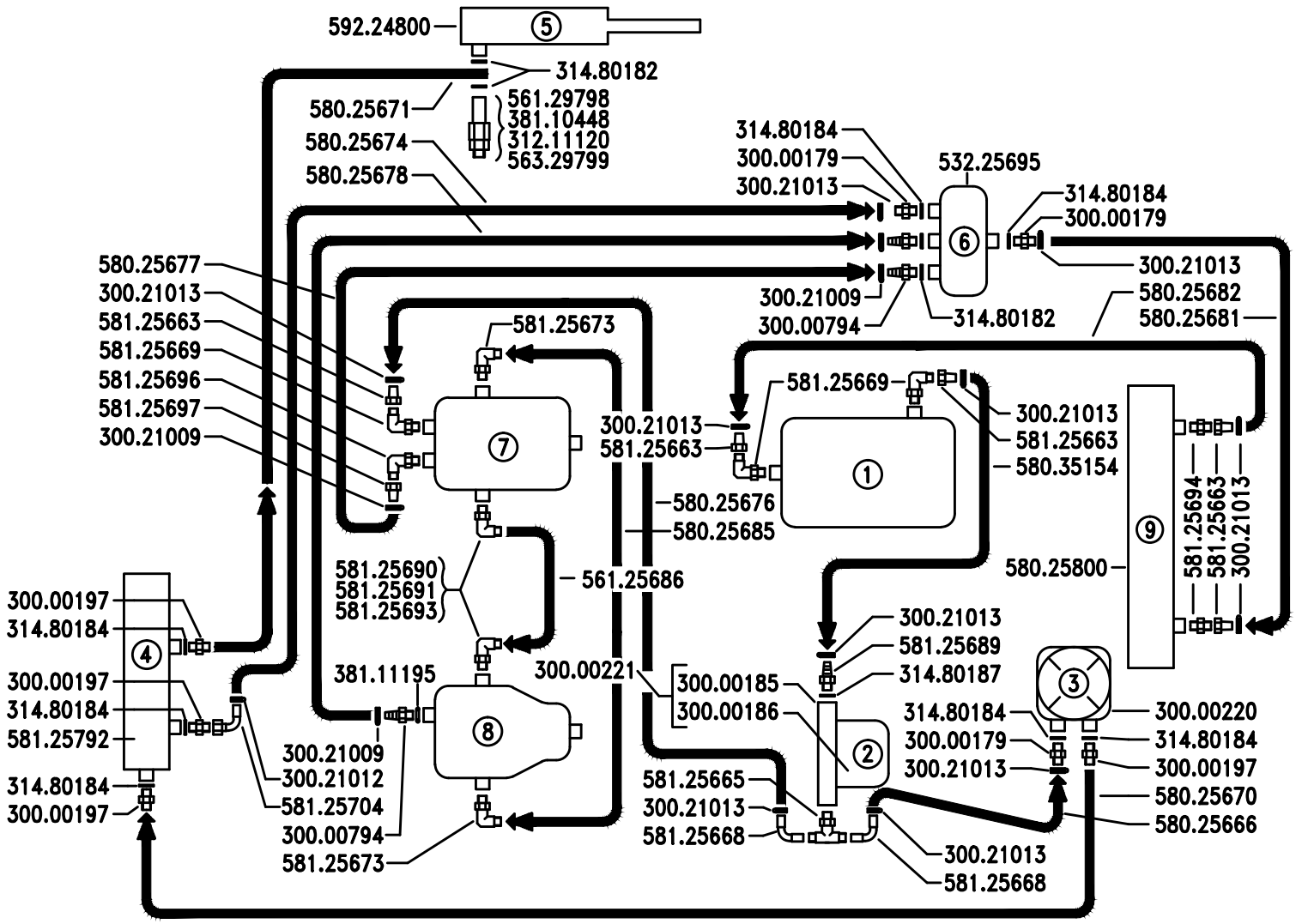

① SCATOLA CAMBIO
CAJA DE CAMBIOS
BOÎTE DE CHANGEMENT DE VITESSE
GEAR BOX
GETRIEBEGEHÄUSE

② FILTRO OLIO
FILTRO DEL ACEITE
FILTRE DE L'HUILE
OIL FILTER
ÖLFILTER

③ POMPA
BOMBA
POMPE HYDRAULIQUE
HYDRAULIC PUMP
HYDROPUMPE

④ DISTRIBUTORE
DISTRIBUIDOR
DISTRIBUTEUR
DISTRIBUTOR
VERTEILER

⑤ CILINDRO SOLLEVAMENTO ANTERIORE
CILINDRO DE IZADO DELANTERO
CYLINDRE DE SOULÈVEMENT ANTÉRIEUR
FRONT RAISER CYLINDER
HUBZYLINDER

⑥ RECUPERATORE
PILA DE RECUPERACIÓN
CUVE DE RÉCUPÉRATION
RECOVERY CARTER
AUSGLEICHSBEHÄLTER

⑦ POMPA IDROSTATICA
BOMBA HIDROSTÁTICA
POMPE HYDROSTATIQUE
HYDROSTATIC PUMP
HYDROSTATICHE PUMPE

⑧ MOTORE IDRAULICO
MOTOR HIDRÁULICO
MOTEUR HYDRAULIQUE
HYDRAULIC MOTOR
HYDROMOTOR

⑨ RADIATORE OLIO
RADIATOR DEL ACEITE
RADIATEUR HUILE
OIL RADIATOR
ÖLKÜHLER

BCS

SERIE

MA.TRA

SCHEMA IMPIANTO IDRAULICO (MT104)

HYDRAULIC LAYOUT DIAGRAM (MT104)

SCHÉMA DE L'INSTALLATION HYDRAULIQUE (MT104)

ESQUEMA DE LA INSTALACIÓN HIDRÁULICA (MT104)

HYDRAULIKPLAN (MT104)

DALLA MACCHINA
DE LA MAQUINA
DE LA MACHINE
FROM THE MACHINE
AB DER MASCHINE
N.

R04

2/199

Pos.	Code	Q.ty	Description	Notes
30000179	30000179	0	NIPPLE P.3/8 DIN13	
30000185	30000185	0	HEAD	
30000186	30000186	0	CARTOUCHE	
30000197	30000197	0	NIPPLE	
30000220	30000220	0	PUMP	
30000221	30000221	0	OIL FILTER CARTRIDGE	
30000794	30000794	0	GASKET HOLDER M JIC 9/16-18-DN10	
30021009	30021009	0	CLAMP 10/16-9	
30021012	30021012	0	CLAMP 12-22 INOX	
30021013	30021013	0	CLAMP 13-24 INOX	
31211120	31211120	0	NUT M12 UNI 5588 6S	
31480182	31480182	0	COPPER WASHER 14	
31480184	31480184	0	COPPER WASHER 16,7x22/1,5	
31480187	31480187	0	COPPER WASHER 26,7x32,5/1,5	
38110448	38110448	0	O-RING OR 2018 (4,48X1,78)	
38111195	38111195	0	O-RING 0120-20 (12X2)	
53225695	53225695	0	RETRIVER	
56125686	56125686	0	PIPE	
56129798	56129798	0	PIPE FITTING	
56329799	56329799	0	ADJUSTING SCREW	
58025666	58025666	0	PIPE	
58025670	58025670	0	PIPE	
58025671	58025671	0	DISTRIBUTING PIPE	
58025674	58025674	0	PIPE	
58025676	58025676	0	SUCTION PIPE	
58025677	58025677	0	RETURN PIPE	
58025678	58025678	0	RETURN PIPE	
58025681	58025681	0	OIL PIPE	
58025682	58025682	0	PIPE	
58025685	58025685	0	PIPE	
58025800	58025800	0	OIL COOLER	
58035154	58035154	0	SUCTION PIPE	
58125663	58125663	0	PIPE FITTING	
58125665	58125665	0	PIPE FITTING	

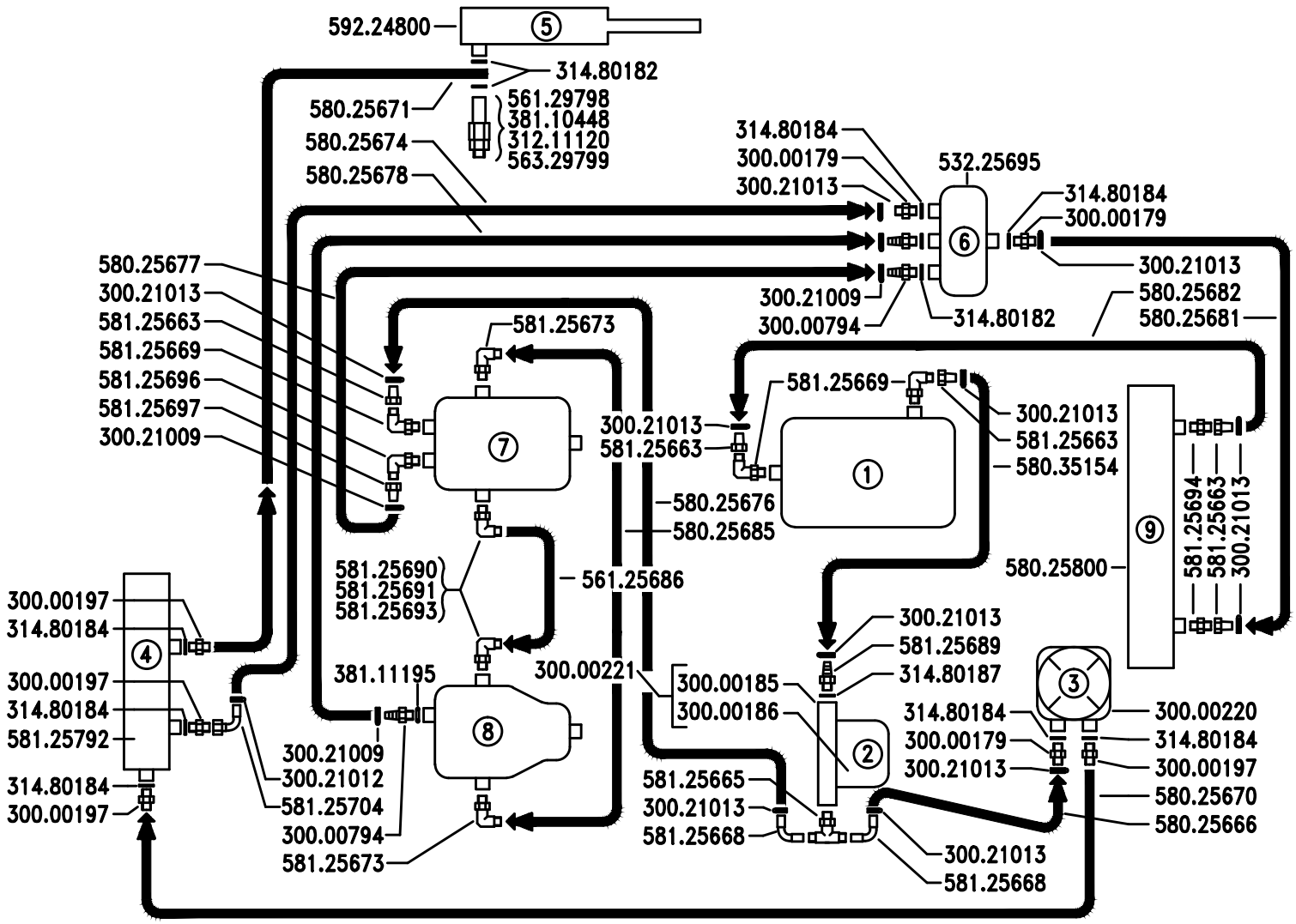

① SCATOLA CAMBIO
CAJA DE CAMBIOS
BOÎTE DE CHANGEMENT DE VITESSE
GEAR BOX
GETRIEBEGEHÄUSE

② FILTRO OLIO
FILTRO DEL ACEITE
FILTRE DE L'HUILE
OIL FILTER
ÖLFILTER

③ POMPA
BOMBA
POMPE HYDRAULIQUE
HYDRAULIC PUMP
HYDROPUMPE

④ DISTRIBUTORE
DISTRIBUIDOR
DISTRIBUTEUR
DISTRIBUTOR
VERTEILER

⑤ CILINDRO SOLLEVAMENTO ANTERIORE
CILINDRO DE IZADO DELANTERO
CYLINDRE DE SOULÈVEMENT ANTÉRIEUR
FRONT RAISER CYLINDER
HUBZYLINDER

⑥ RECUPERATORE
PILA DE RECUPERACIÓN
CUVE DE RÉCUPÉRATION
RECOVERY CARTER
AUSGLEICHSBEHÄLTER

⑦ POMPA IDROSTATICA
BOMBA HIDROSTÁTICA
POMPE HYDROSTATIQUE
HYDROSTATIC PUMP
HYDROSTATICHE PUMPE

⑧ MOTORE IDRAULICO
MOTOR HIDRÁULICO
MOTEUR HYDRAULIQUE
HYDRAULIC MOTOR
HYDROMOTOR

⑨ RADIATORE OLIO
RADIATOR DEL ACEITE
RADIATEUR HUILE
OIL RADIATOR
ÖLKÜHLER

BCS

SERIE

MA.TRA

SCHEMA IMPIANTO IDRAULICO (MT104)

HYDRAULIC LAYOUT DIAGRAM (MT104)

SCHÉMA DE L'INSTALLATION HYDRAULIQUE (MT104)

ESQUEMA DE LA INSTALACIÓN HIDRÁULICA (MT104)

HYDRAULIKPLAN (MT104)

DALLA MACCHINA
DE LA MAQUINA
DE LA MACHINE
FROM THE MACHINE
AB DER MASCHINE
N.

R04

2/199

Pos.	Code	Q.ty	Description	Notes
58125668	58125668	0	AIR ELBOW	
58125669	58125669	0	PIPE FITTING	
58125673	58125673	0	PIPE FITTING	
58125689	58125689	0	NIPPLE	
58125690	58125690	0	PIPE FITTING	
58125691	58125691	0	NUT M30X2	
58125693	58125693	0	RING	
58125694	58125694	0	PIPE FITTING	
58125696	58125696	0	PIPE FITTING	
58125697	58125697	0	PIPE FITTING	
58125704	58125704	0	AIR ELBOW	
58125792	58125792	0	DISTRIBUTOR	
59224800	59224800	0	LIFTING CYLINDER	

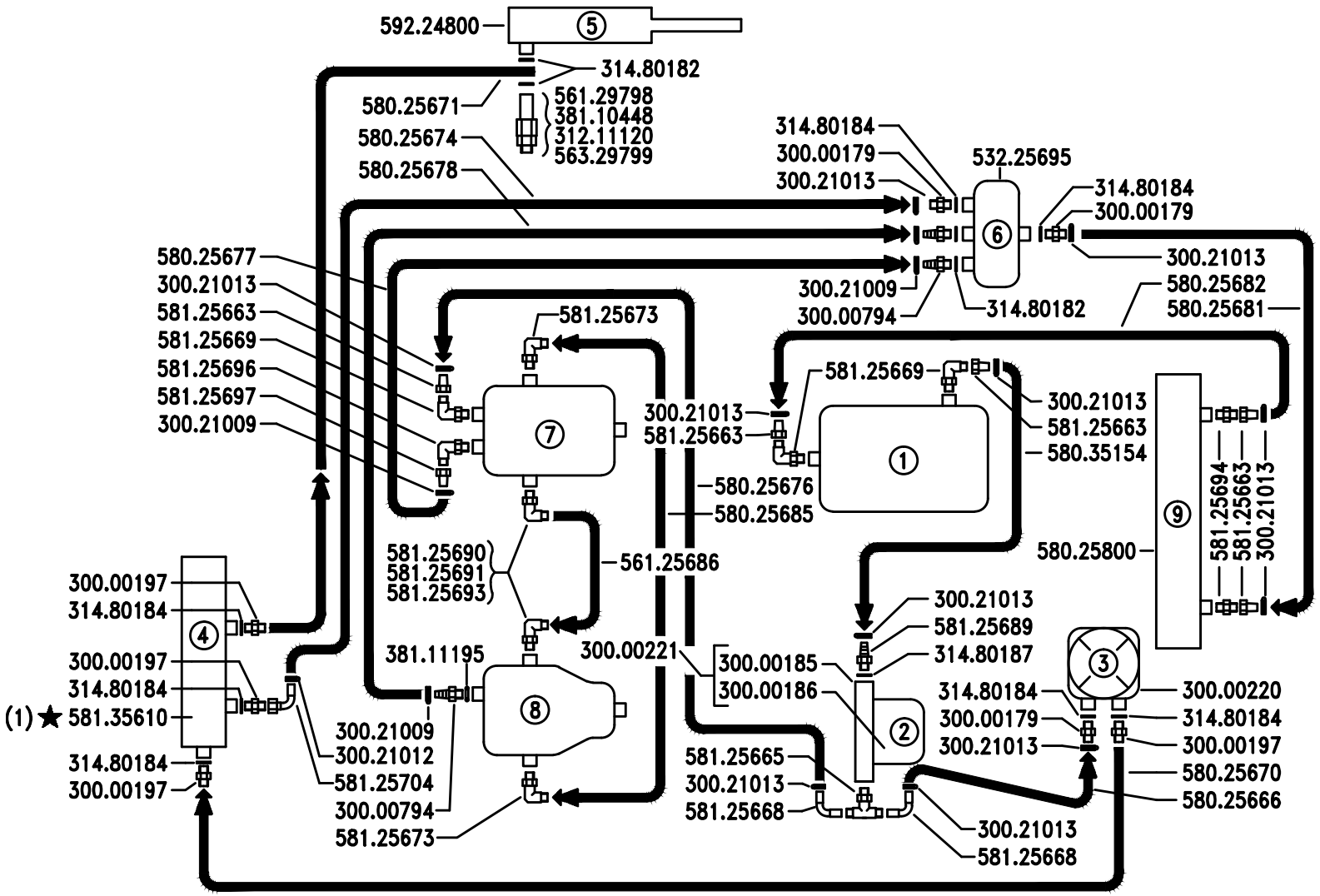

① SCATOLA CAMBIO
CAJA DE CAMBIOS
BOÎTE DE CHANGEMENT DE VITESSE
GEAR BOX
GETRIEBEGEHÄUSE

② FILTRO OLIO
FILTRO DEL ACEITE
FILTRE DE L'HUILE
OIL FILTER
ÖLFILTER

③ POMPA
BOMBA
POMPE HYDRAULIQUE
HYDRAULIC PUMP
HYDROPUMPE

④ DISTRIBUTORE
DISTRIBUIDOR
DISTRIBUTEUR
DISTRIBUTOR
VERTEILER

⑤ CILINDRO SOLLEVAMENTO ANTERIORE
CILINDRO DE IZADO DELANTERO
CYLINDRE DE SOULÈVEMENT ANTÉRIEUR
FRONT RAISER CYLINDER
HUBZYLINDER

⑥ RECUPERATORE
PILA DE RECUPERACIÓN
CUVE DE RÉCUPÉRATION
RECOVERY CARTER
AUSGLEICHSBEHÄLTER

⑦ POMPA IDROSTATICA
BOMBA HIDROSTÁTICA
POMPE HYDROSTATIQUE
HYDROSTATIC PUMP
HYDROSTATICHE PUMPE

⑧ MOTORE IDRAULICO
MOTOR HIDRÁULICO
MOTEUR HYDRAULIQUE
HYDRAULIC MOTOR
HYDROMOTOR

⑨ RADIATORE OLIO
RADIATOR DEL ACEITE
RADIATEUR HUILE
OIL RADIATOR
ÖLKÜHLER

(1) sostituisce 581.25792

BCS

SERIE

MA.TRA

SCHEMA IMPIANTO IDRAULICO (MT104)

HYDRAULIC LAYOUT DIAGRAM (MT104)

SCHÉMA DE L'INSTALLATION HYDRAULIQUE (MT104)

ESQUEMA DE LA INSTALACIÓN HIDRÁULICA (MT104)

HYDRAULIKPLAN (MT104)

DALLA MACCHINA
DE LA MAQUINA
DE LA MACHINE
FROM THE MACHINE
AB DER MASCHINE

★ N. 1431

R04

5/2000

Pos.	Code	Q.ty	Description	Notes
30000179	30000179	0	NIPPLE P.3/8 DIN13	
30000185	30000185	0	HEAD	
30000186	30000186	0	CARTOUCHE	
30000197	30000197	0	NIPPLE	
30000220	30000220	0	PUMP	
30000221	30000221	0	OIL FILTER CARTRIDGE	
30000794	30000794	0	GASKET HOLDER M JIC 9/16-18-DN10	
30021009	30021009	0	CLAMP 10/16-9	
30021012	30021012	0	CLAMP 12-22 INOX	
30021013	30021013	0	CLAMP 13-24 INOX	
31211120	31211120	0	NUT M12 UNI 5588 6S	
31480182	31480182	0	COPPER WASHER 14	
31480184	31480184	0	COPPER WASHER 16,7x22/1,5	
31480187	31480187	0	COPPER WASHER 26,7x32,5/1,5	
38110448	38110448	0	O-RING OR 2018 (4,48X1,78)	
38111195	38111195	0	O-RING 0120-20 (12X2)	
53225695	53225695	0	RETRIVER	
56125686	56125686	0	PIPE	
56129798	56129798	0	PIPE FITTING	
56329799	56329799	0	ADJUSTING SCREW	
58025666	58025666	0	PIPE	
58025670	58025670	0	PIPE	
58025671	58025671	0	DISTRIBUTING PIPE	
58025674	58025674	0	PIPE	
58025676	58025676	0	SUCTION PIPE	
58025677	58025677	0	RETURN PIPE	
58025678	58025678	0	RETURN PIPE	
58025681	58025681	0	OIL PIPE	
58025682	58025682	0	PIPE	
58025685	58025685	0	PIPE	
58025800	58025800	0	OIL COOLER	
58035154	58035154	0	SUCTION PIPE	
58125663	58125663	0	PIPE FITTING	
58125665	58125665	0	PIPE FITTING	

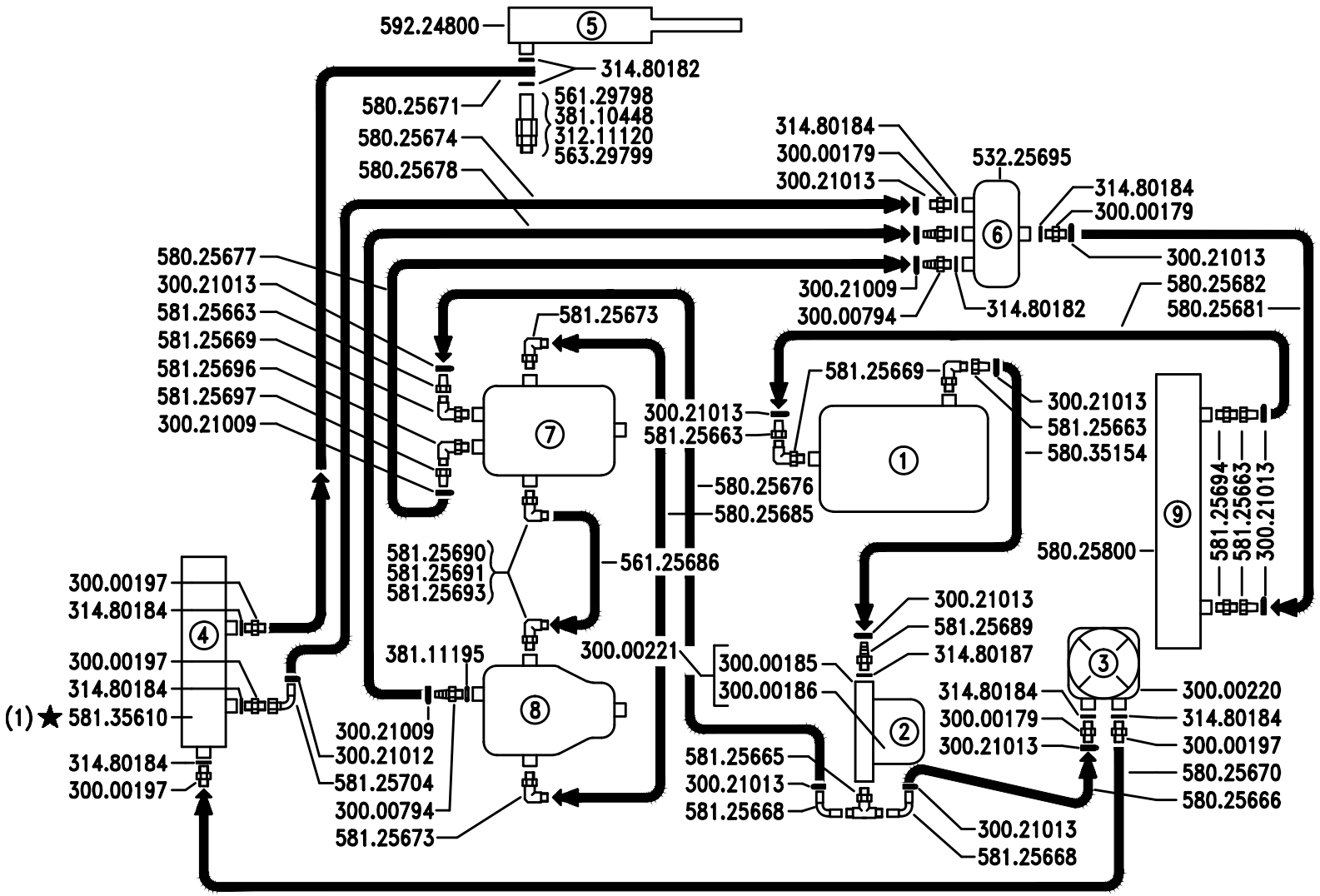

① SCATOLA CAMBIO
CAJA DE CAMBIOS
BOÎTE DE CHANGEMENT DE VITESSE
GEAR BOX
GETRIEBEGEHÄUSE

② FILTRO OLIO
FILTRO DEL ACEITE
FILTRE DE L'HUILE
OIL FILTER
ÖLFILTER

③ POMPA
BOMBA
POMPE HYDRAULIQUE
HYDRAULIC PUMP
HYDROPUMPE

④ DISTRIBUTORE
DISTRIBUIDOR
DISTRIBUTEUR
DISTRIBUTOR
VERTEILER

⑤ CILINDRO SOLLEVAMENTO ANTERIORE
CILINDRO DE IZADO DELANTERO
CYLINDRE DE SOULÈVEMENT ANTÉRIEUR
FRONT RAISER CYLINDER
HUBZYLINDER

⑥ RECUPERATORE
PILA DE RECUPERACIÓN
CUVE DE RÉCUPÉRATION
RECOVERY CARTER
AUSGLEICHSBEHÄLTER

⑦ POMPA IDROSTATICA
BOMBA HIDROSTÁTICA
POMPE HYDROSTATIQUE
HYDROSTATIC PUMP
HYDROSTATICHE PUMPE

⑧ MOTORE IDRAULICO
MOTOR HIDRÁULICO
MOTEUR HYDRAULIQUE
HYDRAULIC MOTOR
HYDROMOTOR

⑨ RADIATORE OLIO
RADIATOR DEL ACEITE
RADIATEUR HUILE
OIL RADIATOR
ÖLKÜHLER

(1) sostituisce 581.25792

BCS

SERIE

MA.TRA

SCHEMA IMPIANTO IDRAULICO (MT104)

HYDRAULIC LAYOUT DIAGRAM (MT104)

SCHÉMA DE L'INSTALLATION HYDRAULIQUE (MT104)

ESQUEMA DE LA INSTALACIÓN HIDRÁULICA (MT104)

HYDRAULIKPLAN (MT104)

DALLA MACCHINA
DE LA MAQUINA
DE LA MACHINE
FROM THE MACHINE
AB DER MASCHINE

★ N. 1431

R04

5/2000

Pos.	Code	Q.ty	Description	Notes
58125668	58125668	0	AIR ELBOW	
58125669	58125669	0	PIPE FITTING	
58125673	58125673	0	PIPE FITTING	
58125689	58125689	0	NIPPLE	
58125690	58125690	0	PIPE FITTING	
58125691	58125691	0	NUT M30X2	
58125693	58125693	0	RING	
58125694	58125694	0	PIPE FITTING	
58125696	58125696	0	PIPE FITTING	
58125697	58125697	0	PIPE FITTING	
58125704	58125704	0	AIR ELBOW	
58135610	58135610	0	S.A. VALVE	
59224800	59224800	0	LIFTING CYLINDER	

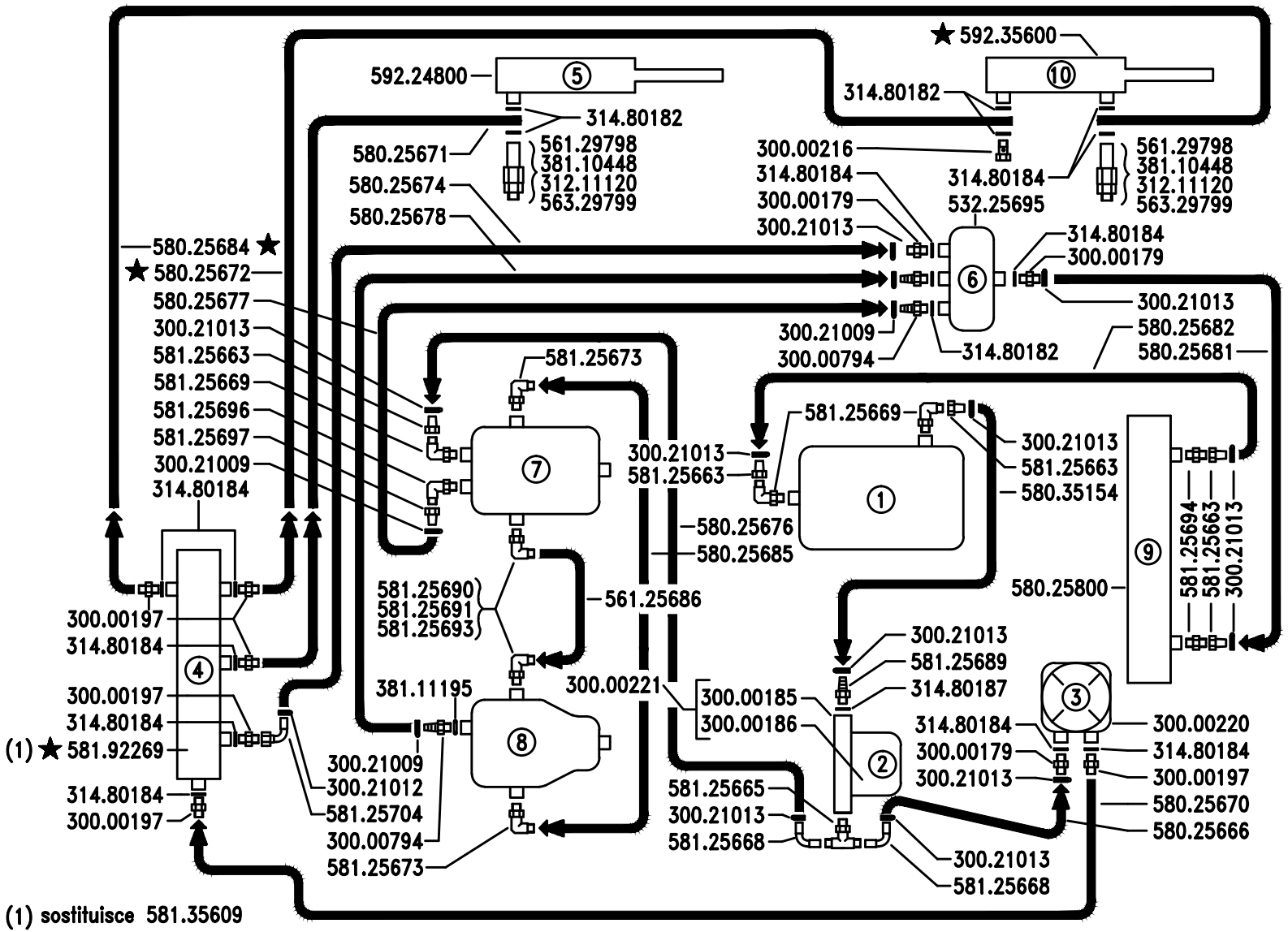

(1) sostituisce 581.35609

① SCATOLA CAMBIO
CAJA DE CAMBIOS
BOÎTE DE CHANGEMENT DE VITESSE
GEAR BOX
GETRIEBEGEHÄUSE

② FILTRO OLIO
FILTRO DEL ACEITE
FILTRE DE L'HUILE
OIL FILTER
ÖLFILTER

③ POMPA
BOMBA
POMPE HYDRAULIQUE
HYDRAULIC PUMP
HYDROPUMPE

④ DISTRIBUTORE
DISTRIBUIDOR
DISTRIBUTEUR
DISTRIBUTOR
VERTEILER

⑤ CILINDRO SOLLEVAMENTO ANTERIORE
CILINDRO DE IZADO DELANTERO
CYLINDRE DE SOULÈVEMENT ANTÉRIEUR
FRONT RAISER CYLINDER
HUBZYLINDER

⑥ RECUPERATORE
PILA DE RECUPERACIÓN
CUVE DE RÉCUPÉRATION
RECOVERY CARTER
AUSGLEICHSBEHÄLTER

⑦ POMPA IDROSTATICA
BOMBA HIDROSTÁTICA
POMPE HYDROSTATIQUE
HYDROSTATIC PUMP
HYDROSTATICHE PUMPE

⑧ MOTORE IDRAULICO
MOTOR HIDRÁULICO
MOTEUR HYDRAULIQUE
HYDRAULIC MOTOR
HYDROMOTOR

⑨ RADIATORE OLIO
RADIATOR DEL ACEITE
RADIATEUR HUILE
OIL RADIATOR
ÖLKÜHLER

⑩ CILINDRO RIBALTAMENTO CESTO
CILINDRO DE VUELCO DEL CESTO
CYLINDRE DE BASCULEMENT DU RÉSERVOIR
COLLECTOR FLIP BACK CYLINDER
KLAPPZLINDER KORB

BCS

SERIE

MA.TRA

SCHEMA IMPIANTO IDRAULICO (MT104)

HYDRAULIC LAYOUT DIAGRAM (MT104)

SCHÉMA DE L'INSTALLATION HYDRAULIQUE (MT104)

ESQUEMA DE LA INSTALACIÓN HIDRÁULICA (MT104)

HYDRAULIKPLAN (MT104)

DALLA MACCHINA
DE LA MAQUINA
DE LA MACHINE
FROM THE MACHINE
AB DER MASCHINE

★ N. 1812

R04

10/200

Pos.	Code	Q.ty	Description	Notes
30000179	30000179	0	NIPPLE P.3/8 DIN13	
30000185	30000185	0	HEAD	
30000186	30000186	0	CARTOUCHE	
30000197	30000197	0	NIPPLE	
30000216	30000216	0	SCREW M14X1,5	
30000220	30000220	0	PUMP	
30000221	30000221	0	OIL FILTER CARTRIDGE	
30000794	30000794	0	GASKET HOLDER M JIC 9/16-18-DN10	
30021009	30021009	0	CLAMP 10/16-9	
30021012	30021012	0	CLAMP 12-22 INOX	
30021013	30021013	0	CLAMP 13-24 INOX	
31211120	31211120	0	NUT M12 UNI 5588 6S	
31480182	31480182	0	COPPER WASHER 14	
31480184	31480184	0	COPPER WASHER 16,7x22/1,5	
31480187	31480187	0	COPPER WASHER 26,7x32,5/1,5	
38110448	38110448	0	O-RING OR 2018 (4,48X1,78)	
38111195	38111195	0	O-RING 0120-20 (12X2)	
53225695	53225695	0	RETRIVER	
56125686	56125686	0	PIPE	
56129798	56129798	0	PIPE FITTING	
56329799	56329799	0	ADJUSTING SCREW	
58025666	58025666	0	PIPE	
58025670	58025670	0	PIPE	
58025671	58025671	0	DISTRIBUTING PIPE	
58025672	58025672	0	DISTRIBUTING PIPE	
58025674	58025674	0	PIPE	
58025676	58025676	0	SUCTION PIPE	
58025677	58025677	0	RETURN PIPE	
58025678	58025678	0	RETURN PIPE	
58025681	58025681	0	OIL PIPE	
58025682	58025682	0	PIPE	
58025684	58025684	0	PIPE	
58025685	58025685	0	PIPE	
58025800	58025800	0	OIL COOLER	

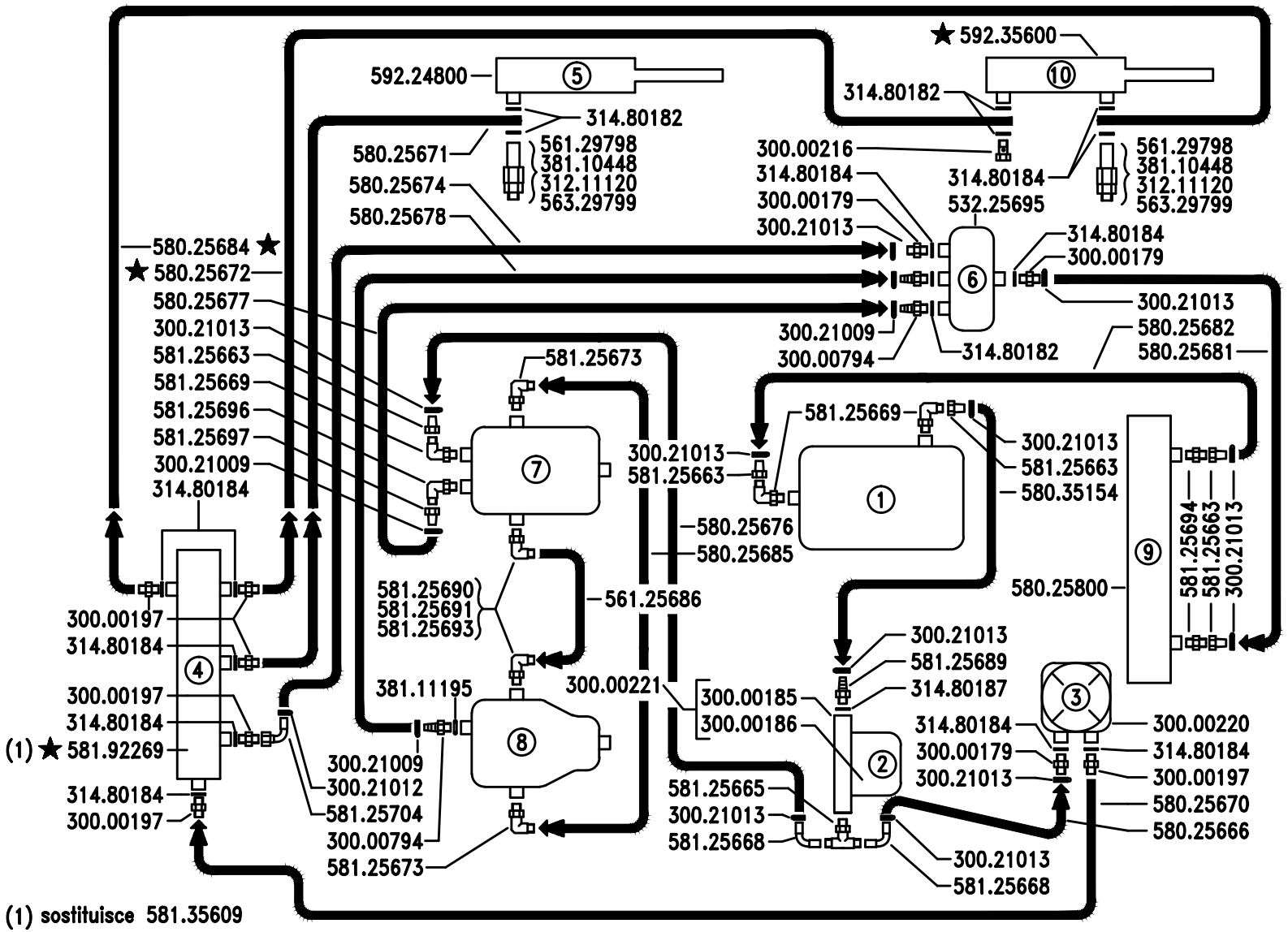

(1) sostituisce 581.35609

① SCATOLA CAMBIO
CAJA DE CAMBIOS
BOÎTE DE CHANGEMENT DE VITESSE
GEAR BOX
GETRIEBEGEHÄUSE

② FILTRO OLIO
FILTRO DEL ACEITE
FILTRE DE L'HUILE
OIL FILTER
ÖLFILTER

③ POMPA
BOMBA
POMPE HYDRAULIQUE
HYDRAULIC PUMP
HYDROPUMPE

④ DISTRIBUTORE
DISTRIBUIDOR
DISTRIBUTEUR
DISTRIBUTOR
VERTEILER

⑤ CILINDRO SOLLEVAMENTO ANTERIORE
CILINDRO DE IZADO DELANTERO
CYLINDRE DE SOULÈVEMENT ANTÉRIEUR
FRONT RAISER CYLINDER
HUBZYLINDER

⑥ RECUPERATORE
PILA DE RECUPERACIÓN
CUVE DE RÉCUPÉRATION
RECOVERY CARTER
AUSGLEICHSBEHÄLTER

⑦ POMPA IDROSTATICA
BOMBA HIDROSTÁTICA
POMPE HYDROSTATIQUE
HYDROSTATIC PUMP
HYDROSTATICHE PUMPE

BCS	SERIE MA.TRA	SCHEMA IMPIANTO IDRAULICO (MT104) HYDRAULIC LAYOUT DIAGRAM (MT104) SCHÉMA DE L'INSTALLATION HYDRAULIQUE (MT104) ESQUEMA DE LA INSTALACIÓN HIDRÁULICA (MT104) HYDRAULIKPLAN (MT104)	DALLA MACCHINA DE LA MAQUINA DE LA MACHINE FROM THE MACHINE AB DER MASCHINE ★N. 1812	R04 10/200

Pos.	Code	Q.ty	Description	Notes
58035154	58035154	0	SUCTION PIPE	
58125663	58125663	0	PIPE FITTING	
58125665	58125665	0	PIPE FITTING	
58125668	58125668	0	AIR ELBOW	
58125669	58125669	0	PIPE FITTING	
58125673	58125673	0	PIPE FITTING	
58125689	58125689	0	NIPPLE	
58125690	58125690	0	PIPE FITTING	
58125691	58125691	0	NUT M30X2	
58125693	58125693	0	RING	
58125694	58125694	0	PIPE FITTING	
58125696	58125696	0	PIPE FITTING	
58125697	58125697	0	PIPE FITTING	
58125704	58125704	0	AIR ELBOW	
58192269	58192269	0	D.A. VALVE	
59224800	59224800	0	LIFTING CYLINDER	
59235600	59235600	0	CYLINDER	

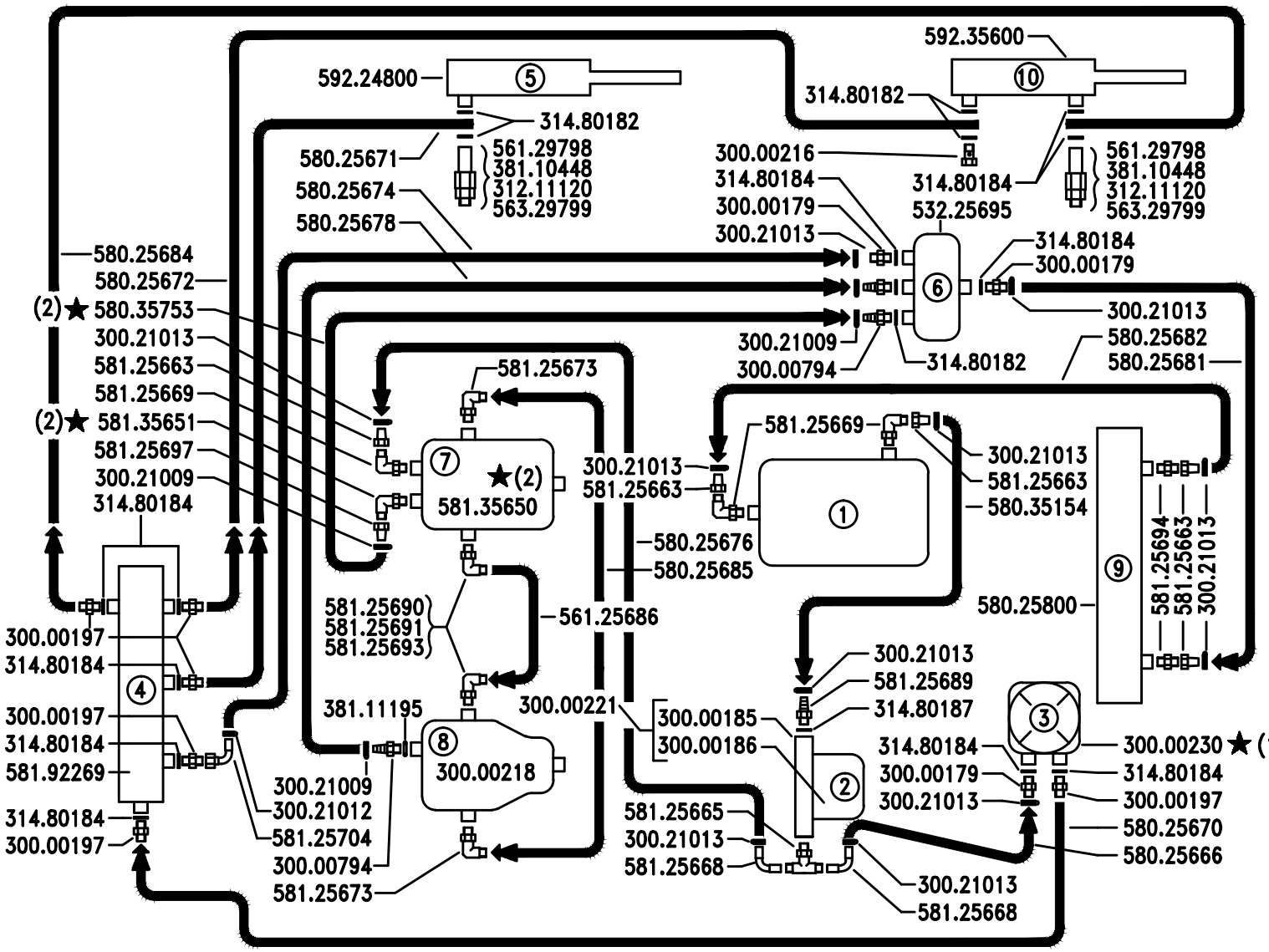

① SCATOLA CAMBIO
CAJA DE CAMBIOS
BOÎTE DE CHANGEMENT DE VITESSE
GEAR BOX
GETRIEBEGEHÄUSE

② FILTRO OLIO
FILTRO DEL ACEITE
FILTRE DE L'HUILE
OIL FILTER
ÖLFILTER

③ POMPA
BOMBA
POMPE HYDRAULIQUE
HYDRAULIC PUMP
HYDROPUMPE

④ DISTRIBUTORE
DISTRIBUIDOR
DISTRIBUTEUR
DISTRIBUTOR
VERTEILER

⑤ CILINDRO SOLLEV. ANTERIORE
CILINDRO DE IZADO DELANTERO
CYLINDRE DE SOULÈVEMENT ANTÉRIEUR
FRONT RAISER CYLINDER
HUBZYLINDER

⑥ RECUPERATORE
PILA DE RECUPERACIÓN
CUVE DE RÉCUPÉRATION
RECOVERY CARTER
AUSGLEICHSBEHÄLTER

⑦ POMPA IDROSTATICA
BOMBA HIDROSTÁTICA
POMPE HYDROSTATIQUE
HYDROSTATIC PUMP
HYDROSTATICHE PUMPE

⑧ MOTORE IDRAULICO
MOTOR HIDRÁULICO
MOTEUR HYDRAULIQUE
HYDRAULIC MOTOR
HYDROMOTOR

⑨ RADIATORE OLIO
RADIATOR DEL ACEITE
RADIATEUR HUILE
OIL RADIATOR
ÖLKÜHLER

⑩ CILINDRO RIBALTAMENTO CESTO
CILINDRO DE VUELCO DEL CESTO
CYLINDRE DE BASCULEMENT DU RÉSERVOIR
COLLECTOR FLIP BACK CYLINDER
KLAPPZLINDER KORB

BCS

SERIE

MA.TRA

SCHEMA IMPIANTO IDRAULICO (MT104)

HYDRAULIC LAYOUT DIAGRAM (MT104)

SCHÉMA DE L'INSTALLATION HYDRAULIQUE (MT104)

ESQUEMA DE LA INSTALACIÓN HIDRÁULICA (MT104)

HYDRAULIKPLAN (MT104)

DALLA MACCHINA
DE LA MAQUINA
DE LA MACHINE
FROM THE MACHINE
AB DER MASCHINE

★ N.

(2) 706475
(1) 1798

R04

3/2003

Pos.	Code	Q.ty	Description	Notes
30000179	30000179	0	NIPPLE P.3/8 DIN13	
30000185	30000185	0	HEAD	
30000186	30000186	0	CARTOUCHE	
30000197	30000197	0	NIPPLE	
30000216	30000216	0	SCREW M14X1,5	
30000218	30000218	1	ENGINE	
30000221	30000221	0	OIL FILTER CARTRIDGE	
30000230	30000230	1	PUMP	
30000794	30000794	0	GASKET HOLDER M JIC 9/16-18-DN10	
30021009	30021009	0	CLAMP 10/16-9	
30021012	30021012	0	CLAMP 12-22 INOX	
30021013	30021013	0	CLAMP 13-24 INOX	
31211120	31211120	0	NUT M12 UNI 5588 6S	
31480182	31480182	0	COPPER WASHER 14	
31480184	31480184	0	COPPER WASHER 16,7x22/1,5	
31480187	31480187	0	COPPER WASHER 26,7x32,5/1,5	
38110448	38110448	0	O-RING OR 2018 (4,48X1,78)	
38111195	38111195	0	O-RING 0120-20 (12X2)	
53225695	53225695	0	RETRIVER	
56125686	56125686	0	PIPE	
56129798	56129798	0	PIPE FITTING	
56329799	56329799	0	ADJUSTING SCREW	
58025666	58025666	0	PIPE	
58025670	58025670	0	PIPE	
58025671	58025671	0	DISTRIBUTING PIPE	
58025672	58025672	0	DISTRIBUTING PIPE	
58025674	58025674	0	PIPE	
58025676	58025676	0	SUCTION PIPE	
58025678	58025678	0	RETURN PIPE	
58025681	58025681	0	OIL PIPE	
58025682	58025682	0	PIPE	
58025684	58025684	0	PIPE	
58025685	58025685	0	PIPE	
58025800	58025800	0	OIL COOLER	

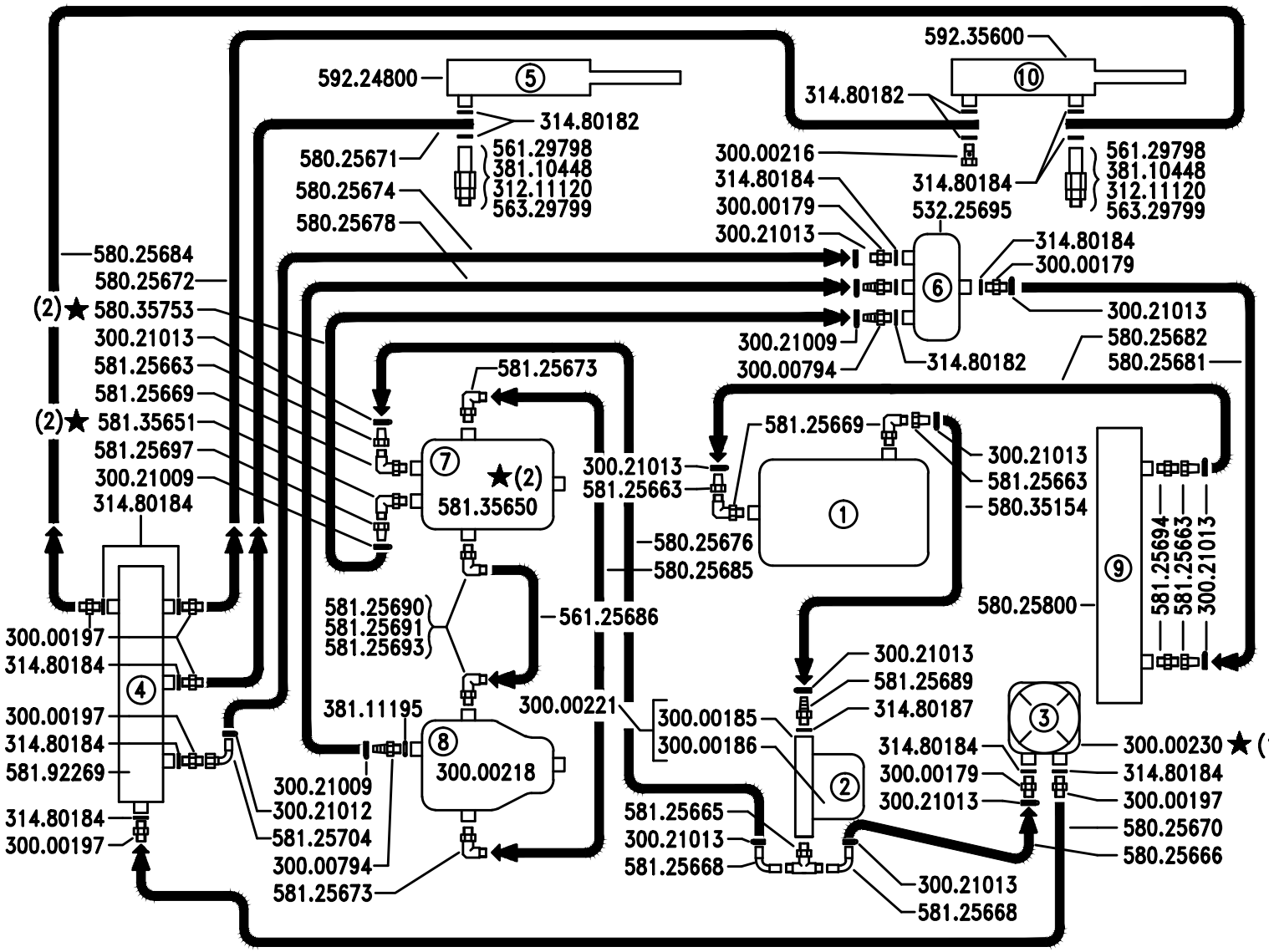

① SCATOLA CAMBIO
CAJA DE CAMBIOS
BOÎTE DE CHANGEMENT DE VITESSE
GEAR BOX
GETRIEBEGEHÄUSE

② FILTRO OLIO
FILTRO DEL ACEITE
FILTRE DE L'HUILE
OIL FILTER
ÖLFILTER

③ POMPA
BOMBA
POMPE HYDRAULIQUE
HYDRAULIC PUMP
HYDROPUMPE

④ DISTRIBUTORE
DISTRIBUIDOR
DISTRIBUTEUR
DISTRIBUTOR
VERTEILER

⑤ CILINDRO SOLLEV. ANTERIORE
CILINDRO DE IZADO DELANTERO
CYLINDRE DE SOULÈVEMENT ANTÉRIEUR
FRONT RAISER CYLINDER
HUBZYLINDER

⑥ RECUPERATORE
PILA DE RECUPERACIÓN
CUVE DE RÉCUPÉRATION
RECOVERY CARTER
AUSGLEICHSBEHÄLTER

⑦ POMPA IDROSTATICA
BOMBA HIDROSTÁTICA
POMPE HYDROSTATIQUE
HYDROSTATIC PUMP
HYDROSTATICHE PUMPE

⑧ MOTORE IDRAULICO
MOTOR HIDRÁULICO
MOTEUR HYDRAULIQUE
HYDRAULIC MOTOR
HYDROMOTOR

⑨ RADIATORE OLIO
RADIATOR DEL ACEITE
RADIATEUR HUILE
OIL RADIATOR
ÖLKÜHLER

⑩ CILINDRO RIBALTAMENTO CESTO
CILINDRO DE VUELCO DEL CESTO
CYLINDRE DE BASCULEMENT DU RÉSERVOIR
COLLECTOR FLIP BACK CYLINDER
KLAPPZLINDER KORB

BCS

SERIE
MA.TRA

SCHEMA IMPIANTO IDRAULICO (MT104)

HYDRAULIC LAYOUT DIAGRAM (MT104)

SCHÉMA DE L'INSTALLATION HYDRAULIQUE (MT104)

ESQUEMA DE LA INSTALACIÓN HIDRÁULICA (MT104)

HYDRAULIKPLAN (MT104)

DALLA MACCHINA
DE LA MAQUINA
DE LA MACHINE
FROM THE MACHINE
AB DER MASCHINE

★ N.

(2) 706475
(1) 1798

R04

3/2003

Pos.	Code	Q.ty	Description	Notes
58035154	58035154	0	SUCTION PIPE	
58035753	58035753	1	RETURN PIPE	
58125663	58125663	0	PIPE FITTING	
58125665	58125665	0	PIPE FITTING	
58125668	58125668	0	AIR ELBOW	
58125669	58125669	0	PIPE FITTING	
58125673	58125673	0	PIPE FITTING	
58125689	58125689	0	NIPPLE	
58125690	58125690	0	PIPE FITTING	
58125691	58125691	0	NUT M30X2	
58125693	58125693	0	RING	
58125694	58125694	0	PIPE FITTING	
58125697	58125697	0	PIPE FITTING	
58125704	58125704	0	AIR ELBOW	
58135650	58135650	1	PUMP	
58135651	58135651	1	PIPE FITTING	
58192269	58192269	0	D.A. VALVE	
59224800	59224800	0	LIFTING CYLINDER	
59235600	59235600	0	CYLINDER	

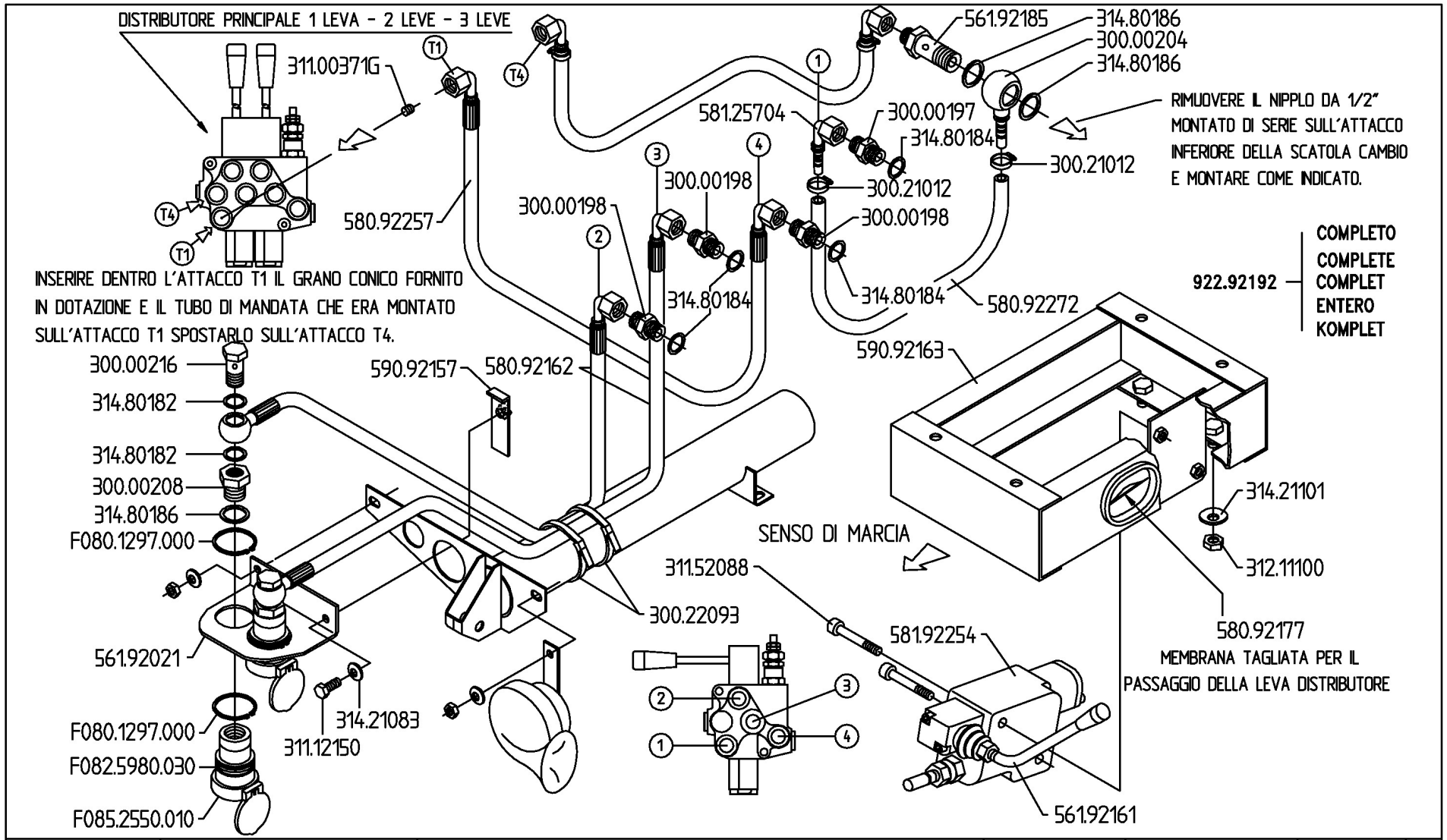

BCS	SERIE MA.TRA	INNESTI RAPIDI (ACCESSORIO) QUICK COUPLIGNS / ATTELAGES RAPIDES ACOPLADOS RÁPIDOS / SCHNELL KUPPLUNGEN	DALLA MACCHINA DE LA MAQUINA DE LA MACHINE FROM THE MACHINE AB DER MASCHINE N.	(MT 101) 1795 (MT 104-103) 1759 (MT205) 1683	R06	Rev. 0
					03/2002	

DITE - BCS 32R06T00R

Pos.	Code	Q.ty	Description	Notes
30000197	30000197	1	NIPPLE	
30000198	30000198	1	NIPPLE G.3/8 14X1,5	
30000204	30000204	1	EYELET	
30000208	30000208	1	NIPPLO DI RIDUZ.M/F1/2-M14X1,5	
30000216	30000216	1	SCREW M14X1,5	
30021012	30021012	1	CLAMP 12-22 INOX	
30022093	30022093	1	COLLAR	
31112150	31112150	1	SCREW TE M8X20 UNI 5739 8G	
31152088	31152088	1	SCREW TCEI M8X55 UNI 5931	
31211100	31211100	1	NUT M10	
31421083	31421083	1	WASHER	
31421101	31421101	1	WASHER	
31480182	31480182	1	COPPER WASHER 14	
31480184	31480184	1	COPPER WASHER 16,7x22/1,5	
31480186	31480186	1	COPPER WASHER 21,2x27/1,5	
56192021	56192021	1	PLATE	
56192161	56192161	1	DISTRIBUTOR LEVER	
56192185	56192185	1	NIPPLE 1/2	
58092162	58092162	1	DISTRIBUTING PIPE	
58092177	58092177	1	CABLE GLAND DG48 48X60X68X2,5	
58092257	58092257	1	DISTRIBUTING PIPE	
58092272	58092272	1	RETURN PIPE	
58125704	58125704	1	AIR ELBOW	
58192254	58192254	1	DISTRIBUTOR	
59092157	59092157	1	STOP	
59092163	59092163	1	SUPPORT	
92292192	92292192	1	ADDITIONAL HYDRAULIC COUPLERS FOR MA.TRA	
31100371	31100371G	1	VITE STEI 1/4 CONICA GREZZA	
F0801297	F0801297000	1	SEEGER RING E 40 UNI 7435	
F0825980	F0825980030	1	COUPLING	
F0852550	F0852550010	1	GUARD	

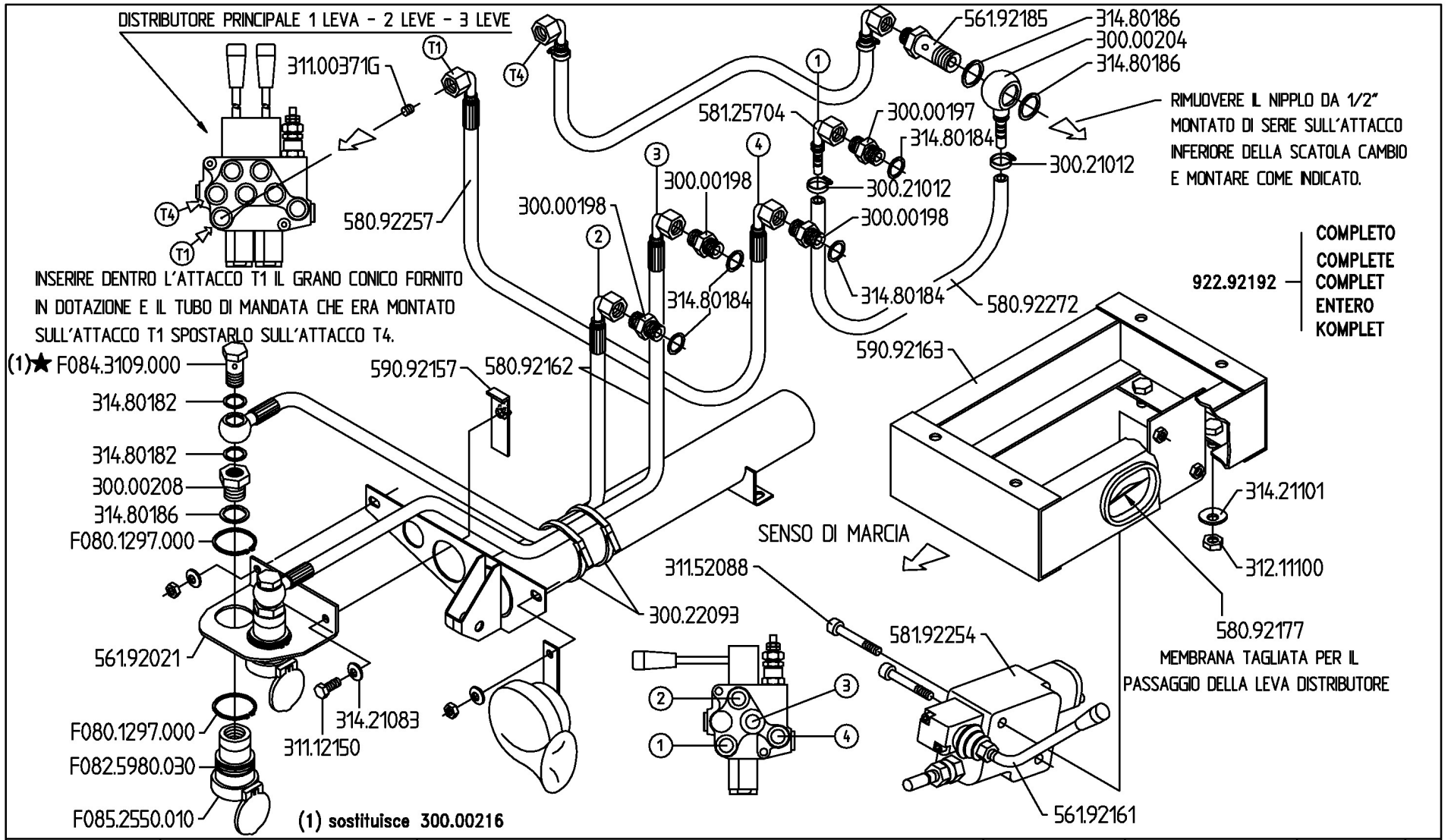

BCS	SERIE MA.TRA	INNESTI RAPIDI (ACCESSORIO) QUICK COUPLINGS — ATTELAGES RAPIDES ACOPLADOS RÁPIDOS — SCHNELL KUPPLUNGEN	DALLA MACCHINA DE LA MAQUINA DE LA MACHINE FROM THE MACHINE AB DER MASCHINE ★N.	AGGIORNAMENTO APLAZAMIENTO MISE A JOUR REVISION ANPASSUNG	R06	Rev. 1
					10/2006	

DITE - BCS 32R06T01B

Pos.	Code	Q.ty	Description	Notes
30000197	30000197	1	NIPPLE	
30000198	30000198	1	NIPPLE G.3/8 14X1,5	
30000204	30000204	1	EYELET	
30000208	30000208	1	NIPPLO DI RIDUZ.M/F1/2-M14X1,5	
30021012	30021012	1	CLAMP 12-22 INOX	
30022093	30022093	1	COLLAR	
31112150	31112150	1	SCREW TE M8X20 UNI 5739 8G	
31152088	31152088	1	SCREW TCEI M8X55 UNI 5931	
31211100	31211100	1	NUT M10	
31421083	31421083	1	WASHER	
31421101	31421101	1	WASHER	
31480182	31480182	1	COPPER WASHER 14	
31480184	31480184	1	COPPER WASHER 16,7x22/1,5	
31480186	31480186	1	COPPER WASHER 21,2x27/1,5	
56192021	56192021	1	PLATE	
56192161	56192161	1	DISTRIBUTOR LEVER	
56192185	56192185	1	NIPPLE 1/2	
58092162	58092162	1	DISTRIBUTING PIPE	
58092177	58092177	1	CABLE GLAND DG48 48X60X68X2,5	
58092257	58092257	1	DISTRIBUTING PIPE	
58092272	58092272	1	RETURN PIPE	
58125704	58125704	1	AIR ELBOW	
58192254	58192254	1	DISTRIBUTOR	
59092157	59092157	1	STOP	
59092163	59092163	1	SUPPORT	
92292192	92292192	1	ADDITIONAL HYDRAULIC COUPLERS FOR MA.TRA	
31100371	31100371G	1	VITE STEI 1/4 CONICA GREZZA	
F0801297	F0801297000	1	SEEGER RING E 40 UNI 7435	
F0825980	F0825980030	1	COUPLING	
F0843109	F0843109000	1	PIPE FITTING 14x1,5	
F0852550	F0852550010	1	GUARD	

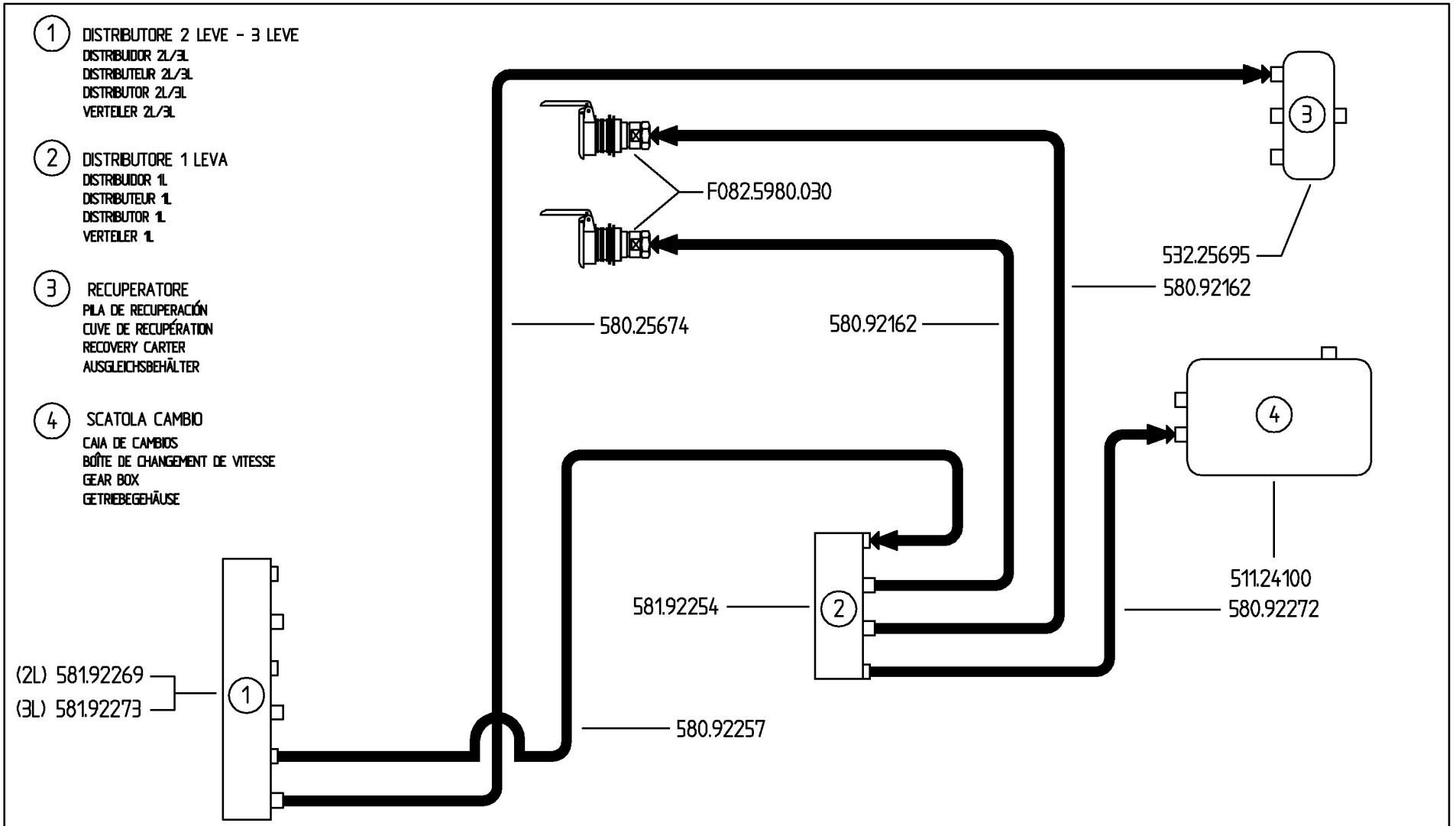

BCS

SERIE

MA.TRA

SCHEMA IDRAULICO INNESTI RAPIDI (MT103-104-205)

HYDRAULIC DIAGRAM QUICK CONPLING (MT103-104-205)

SCHÉMA HYDRAULIQUE ATTELAGES RAPIDES (MT103-104-205)

ESQUEMA HIDRÁULICA ACOPLADOX RÁPIDOS (MT103-104-205)

HYDRULIKPLAN SCHNELL KUPPLUNGEN (MT103-104-205)

DALLA MACCHINA
DE LA MAQUINA
DE LA MACHINE
FROM THE MACHINE
AB DER MASCHINE

N.

R07

Rev. 0

03/2002

DTF - BCS 329077008

Pos.	Code	Q.ty	Description	Notes
51124100	51124100	1	SCATOLA CAMBIO	
53225695	53225695	1	RETRIVER	
58025674	58025674	1	PIPE	
58092162	58092162	1	DISTRIBUTING PIPE	
58092257	58092257	1	DISTRIBUTING PIPE	
58092272	58092272	1	RETURN PIPE	
58192254	58192254	1	DISTRIBUTOR	
58192269	58192269	1	D.A. VALVE	
58192273	58192273	1	DISTRIBUTOR	
F0825980	F0825980030	1	COUPLING	

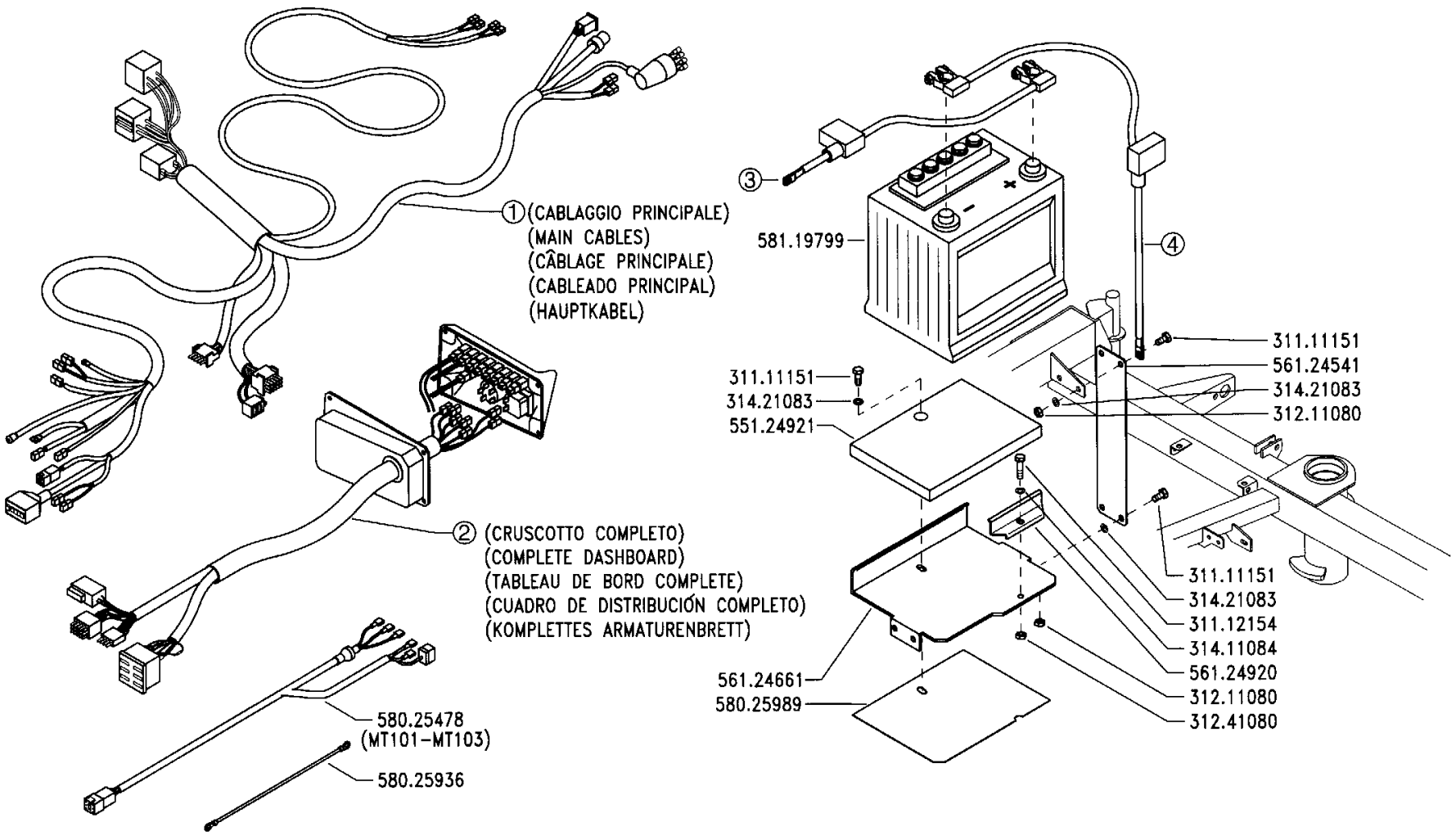

BCS	SERIE MA.TRA	IMPIANTO ELETTRICO SENZA FARI ELECTRICAL INSTALLATION HEADLIGHTS EXCLUDED INSTALACIÓN ELÉCTRICA SIN FAROS INSTALLATION ÉLECTRIQUE SANS PHARES ELEKTRISCHE ANLAGE OHNE SCHEINWERFER	DALLA MACCHINA DE LA MAQUINA DE LA MACHINE FROM THE MACHINE AB DER MASCHINE N.	PRODUZIONE 1998 PRODUCCIÓN 1998 PRODUCTION 1998 PRODUCTION 1998 PRODUKTION 1998	S01 1/1999	Mod. 0

2ENNE

Pos.	Code	Q.ty	Description	Notes
31111151	31111151	0	SCREW TE M8X16 UNI 5739 8G	
31112154	31112154	0	SCREW TE M8X40 UNI 5739 8G	
31211080	31211080	0	NUT M8	
31241080	31241080	0	HEXAGON SELFLOCK NUT M8	
31411084	31411084	0	WASHER 8,4x17	
31421083	31421083	0	WASHER	
55124921	55124921	0	SUPPORT	
56124541	56124541	0	PLATE	
56124661	56124661	0	BATTERY SUPPORT	
56124920	56124920	0	SMALL PLATE	
58025478	58025478	0	WIRING	
58025936	58025936	0	WIRING	
58025989	58025989	0	GUARD	
58119799	58119799	0	BATTERY	

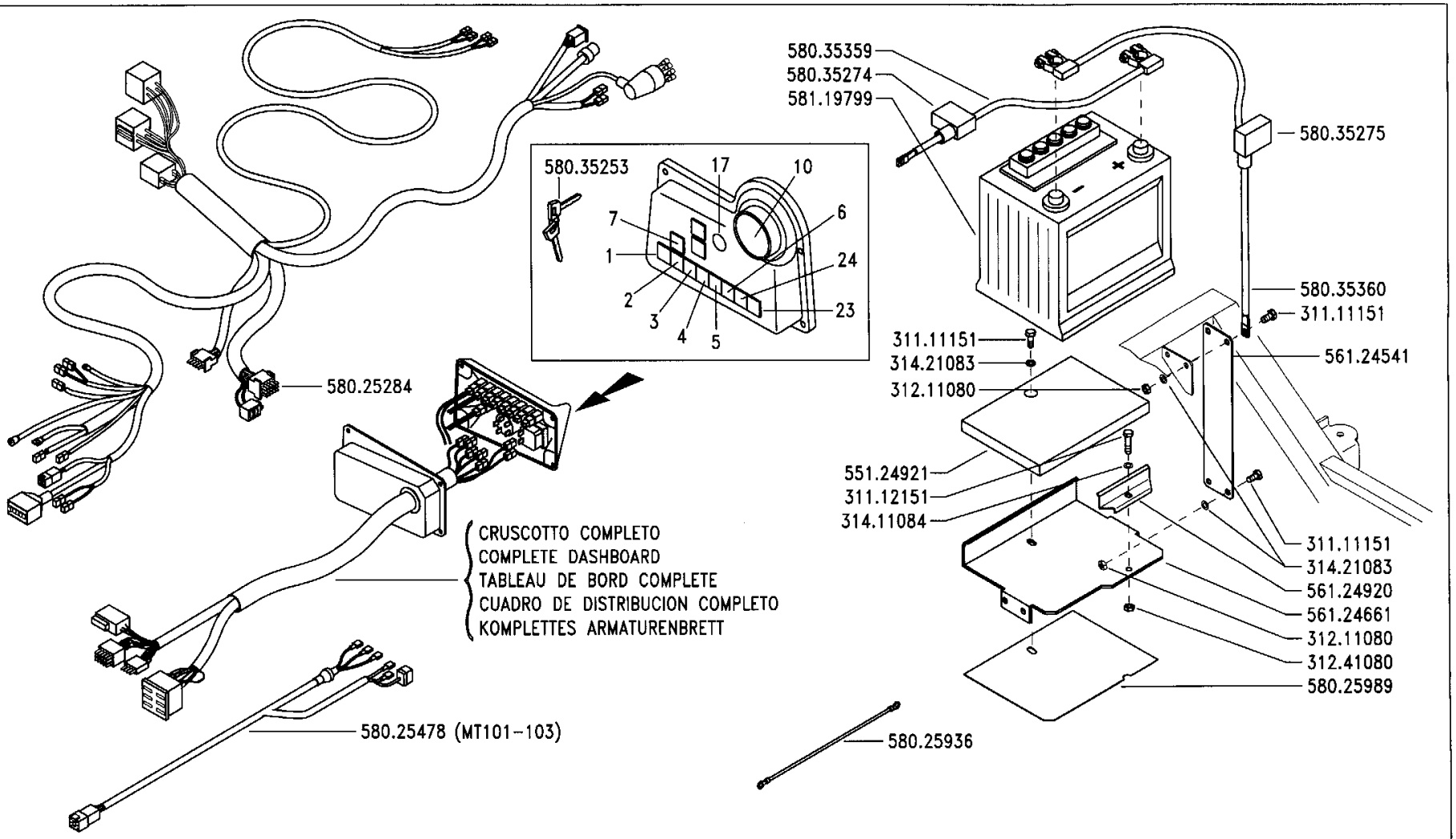

BCS

SERIE

MA.TRA

IMPIANTO ELETTRICO "BASE"

(PER LEGENDA POS./CODICI VEDI TAV. T01/1)

ELECTRICAL INSTALLATION
(FOR LEGEND POS./CODES SEE TABLE T01/1)

INSTALLATION ÉLECTRIQUE
(POUR LÉGENDE POS./REFERENCES VOIR LA PLANCHE T01/1)

INSTALACIÓN ELÉCTRICA
(PARA LA LEYENDAS POS./CODIGOS VEER LA TABLA T01/1)

ELEKTRISCHE ANLAGE
(FÜR ZEICHENERKLÄRUNG DER POS./NUMMERN SIEHE PLÄNE T01/1)

DALLA MACCHINA
DE LA MAQUINA
DE LA MACHINE
FROM THE MACHINE
AB DER MASCHINE

N.

SOSTITUISCE S01/0
REPLACES S01/0
REMPLACE S01/0
SUSTITUISCE S01/0
ERSETZUNG S01/0

S01

Mod. 1

2/1999

ZENNE

Pos.	Code	Q.ty	Description	Notes
31111151	31111151	0	SCREW TE M8X16 UNI 5739 8G	
31112151	31112151	0	SCREW TE M8X25 UNI 5739 8G	
31211080	31211080	0	NUT M8	
31241080	31241080	0	HEXAGON SELFLOCK NUT M8	
31411084	31411084	0	WASHER 8,4x17	
31421083	31421083	0	WASHER	
55124921	55124921	0	SUPPORT	
56124541	56124541	0	PLATE	
56124661	56124661	0	BATTERY SUPPORT	
56124920	56124920	0	SMALL PLATE	
58025284	58025284	0	WIRING	
58025478	58025478	0	WIRING	
58025936	58025936	0	WIRING	
58025989	58025989	0	GUARD	
58035253	58035253	0	KEY	
58035274	58035274	0	CAP	
58035275	58035275	0	CAP	
58035359	58035359	0	CABLE	
58035360	58035360	0	CABLE	
58119799	58119799	0	BATTERY	

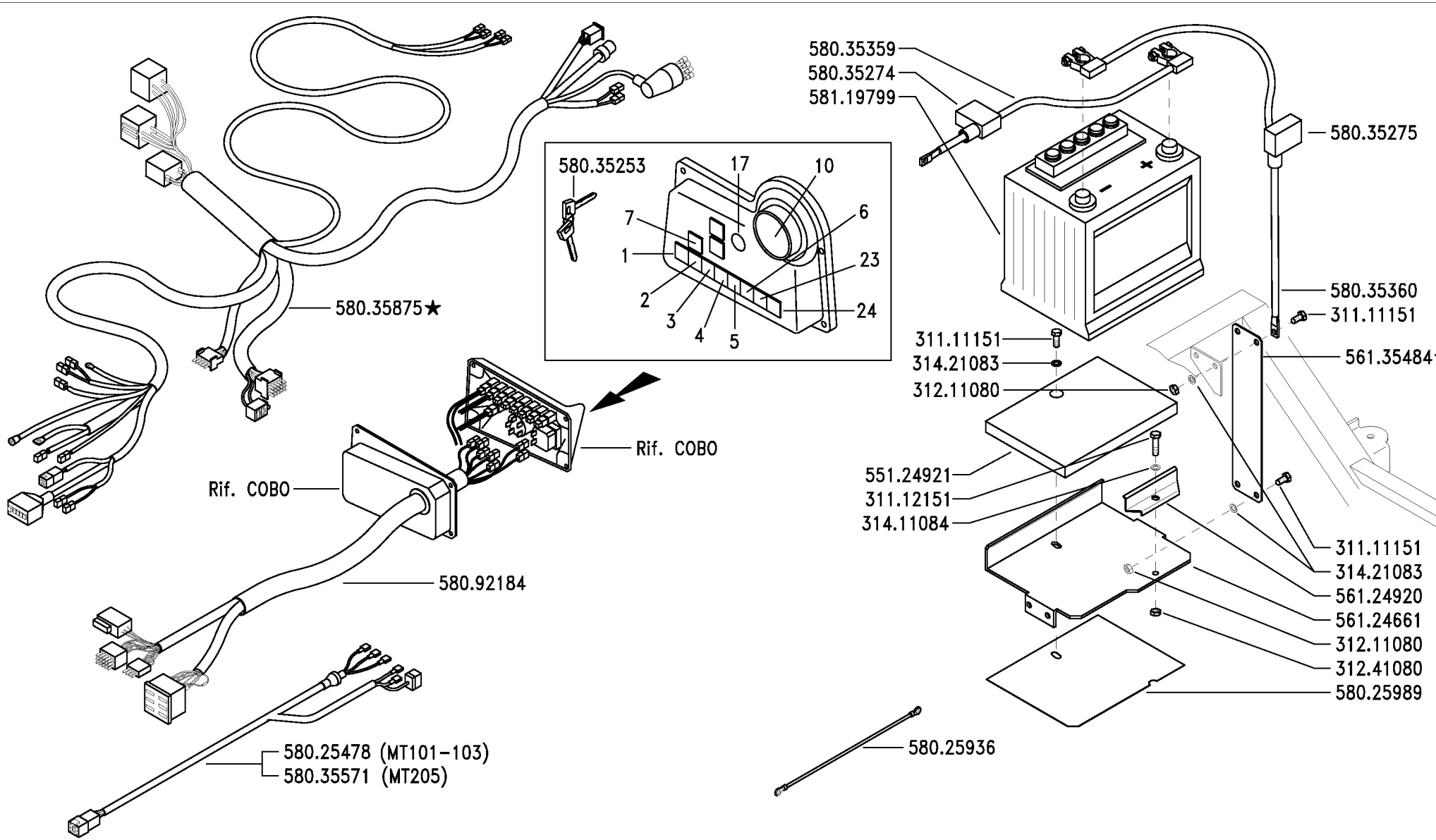

BCS	SERIE MA.TRA	IMPIANTO ELETTRICO "BASE" (PER LEGENDA POS./CODICI VEDI TAV. T01/1) ELECTRICAL INSTALLATION (FOR LEGEND POS./CODES SEE TABLE T01/1) INSTALLATION ÉLECTRIQUE (POUR LÈGENDE POS./REFERENCES VOIR LA PLANCHE T01/1) INSTALACIÓN ELÉCTRICA (PARA LA LEYENDAS POS./CODIGOS VEER LA TABLA T01/1) ELEKTRISCHE ANLAGE (FÜR ZEICHENERKLÄRUNG DER POS./NUMMERN SIEHE PLÄNE T01/1)	DALLA MACCHINA DE LA MAQUINA DE LA MACHINE FROM THE MACHINE AB DER MASCHINE ★N.	ERRATA CORRIGE 1480	S01 7/200

Pos.	Code	Q.ty	Description	Notes
31111151	31111151	0	SCREW TE M8X16 UNI 5739 8G	
31112151	31112151	0	SCREW TE M8X25 UNI 5739 8G	
31211080	31211080	0	NUT M8	
31241080	31241080	0	HEXAGON SELFLOCK NUT M8	
31411084	31411084	0	WASHER 8,4x17	
31421083	31421083	0	WASHER	
55124921	55124921	0	SUPPORT	
56124661	56124661	0	BATTERY SUPPORT	
56124920	56124920	0	SMALL PLATE	
56135484	56135484	0	PLATE	
58025478	58025478	0	WIRING	
58025936	58025936	0	WIRING	
58025989	58025989	0	GUARD	
58035253	58035253	0	KEY	
58035274	58035274	0	CAP	
58035275	58035275	0	CAP	
58035359	58035359	0	CABLE	
58035360	58035360	0	CABLE	
58035571	58035571	0	WIRING	
58035875	58035875	0	WIRING	
58092184	58092184	0	WIRING	
58119799	58119799	0	BATTERY	

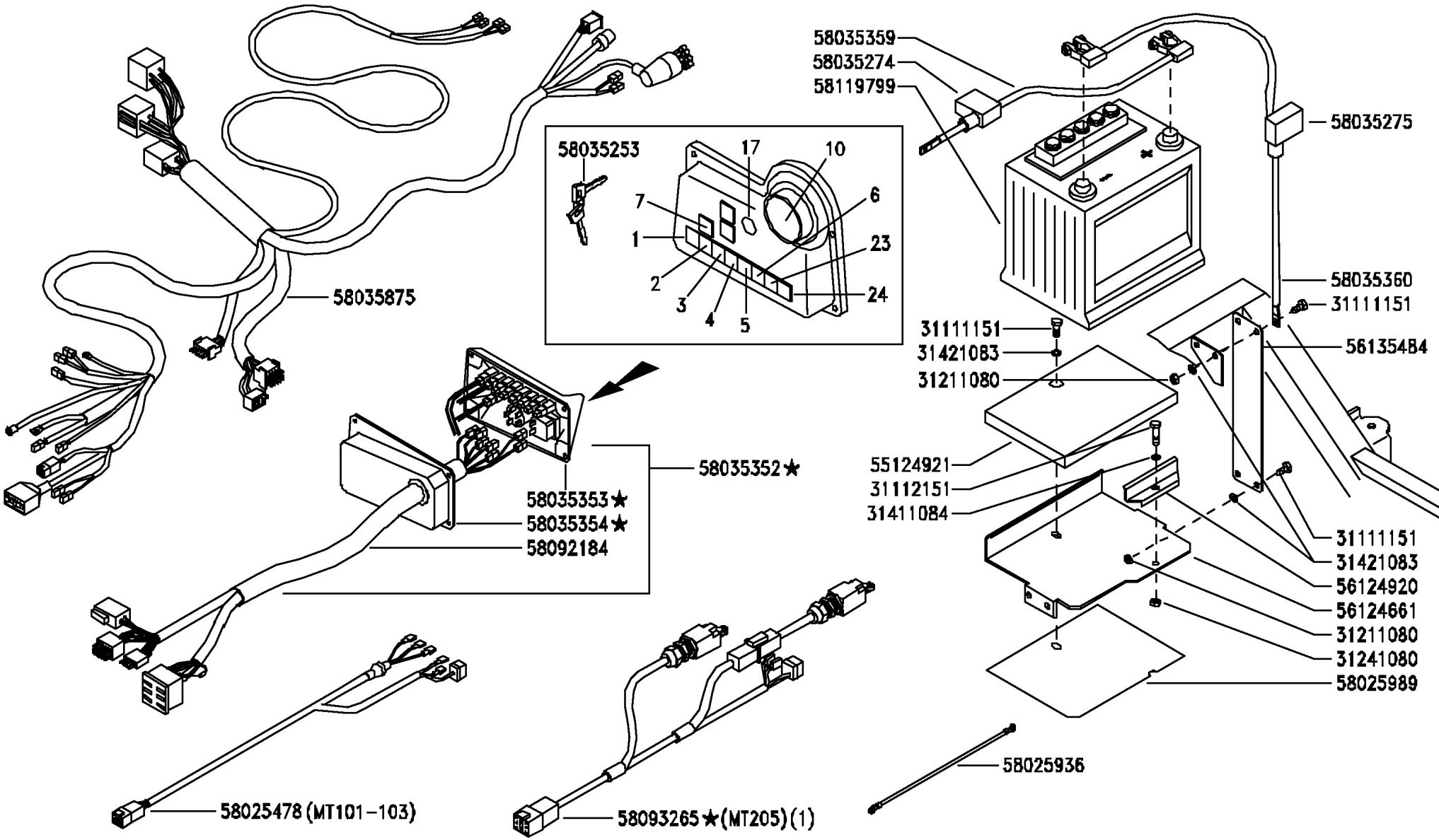

BCS

SERIE

MA.TRA

IMPIANTO ELETTRICO "BASE"

(PER LEGENDA POS./CODICI VEDI TAV. T01/1)

ELECTRICAL INSTALLATION
(FOR LEGEND POS./CODES SEE TABLE T01/1)

INSTALLATION ÉLECTRIQUE
(POUR LÉGENDE POS./REFERENCES VOIR LA PLANCHE T01/1)

INSTALACIÓN ELÉCTRICA
(PARA LA LEYENDAS POS./CODIGOS VEER LA TABLA T01/1)

ELEKTRISCHE ANLAGE
(FÜR ZEICHENERKLÄRUNG DER POS./NUMMERN SIEHE PLANE T01/1)

DALLA MACCHINA
DE LA MAQUINA
DE LA MACHINE
FROM THE MACHINE
AB DER MASCHINE

★N.

(1) 760560

S01

03/200

Pos.	Code	Q.ty	Description	Notes
31111151	31111151	1	SCREW TE M8X16 UNI 5739 8G	
31112151	31112151	1	SCREW TE M8X25 UNI 5739 8G	
31211080	31211080	1	NUT M8	
31241080	31241080	1	HEXAGON SELFLOCK NUT M8	
31411084	31411084	1	WASHER 8,4x17	
31421083	31421083	1	WASHER	
55124921	55124921	1	SUPPORT	
56124661	56124661	1	BATTERY SUPPORT	
56124920	56124920	1	SMALL PLATE	
56135484	56135484	1	PLATE	
58025478	58025478	1	WIRING	
58025936	58025936	1	WIRING	
58025989	58025989	1	GUARD	
58035253	58035253	1	KEY	
58035274	58035274	1	CAP	
58035275	58035275	1	CAP	
58035352	58035352	1	DASHBOARD	
58035353	58035353	1	BOX	
58035354	58035354	1	SUPPORT	
58035359	58035359	1	CABLE	
58035360	58035360	1	CABLE	
58035571	58035571	1	WIRING	
58035875	58035875	1	WIRING	
58092184	58092184	1	WIRING	
58093265	58093265	1	WIRING	
58119799	58119799	1	BATTERY	

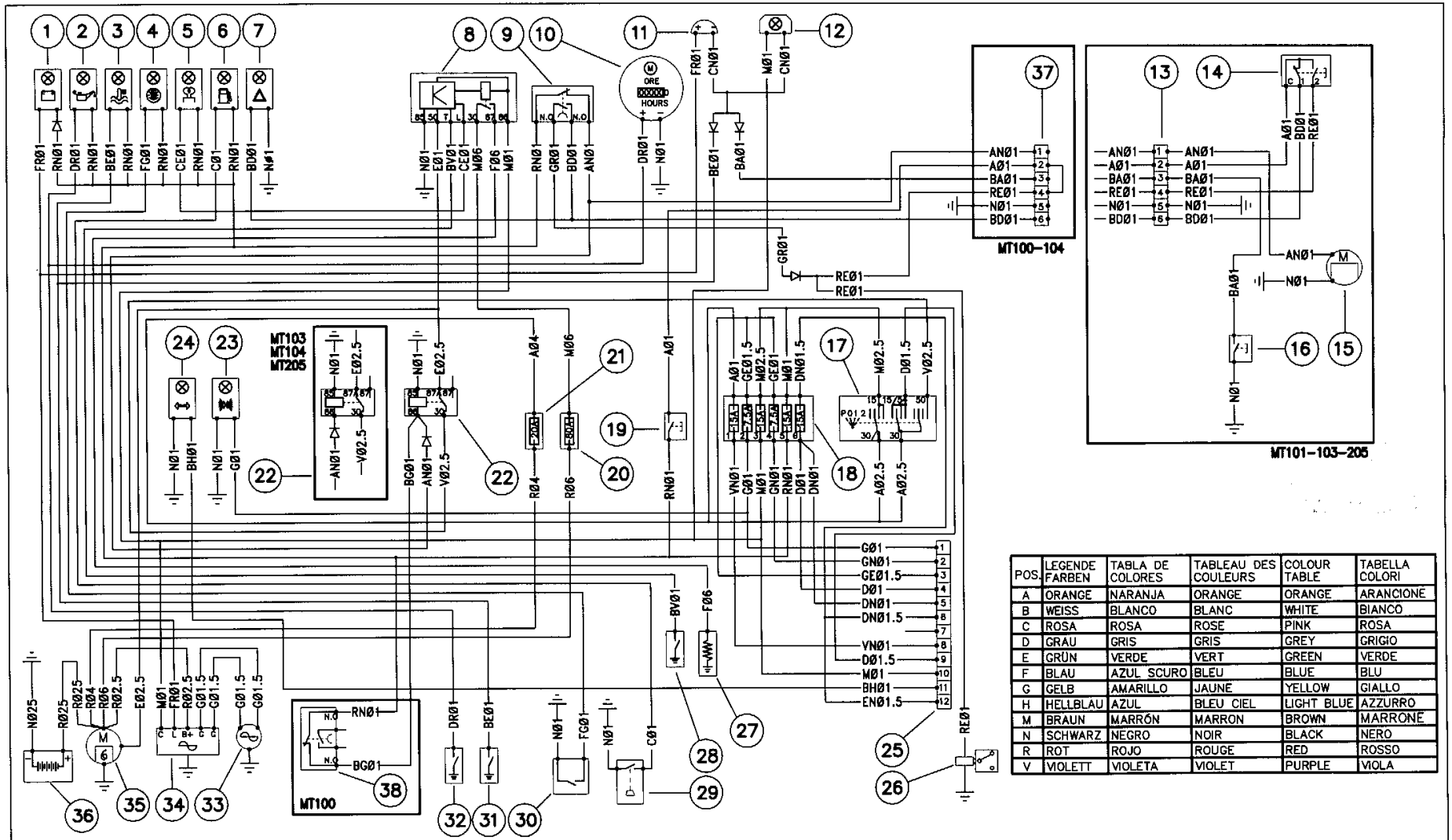

POS.	LEGENDE FARBEN	TABLA DE COLORES	TABLEAU DES COULEURS	COLOUR TABLE	TABELLA COLORI
A	ORANGE	NARANJA	ORANGE	ORANGE	ARANCIONE
B	WEISS	BLANCO	BLANC	WHITE	BIANCO
C	ROSA	ROSA	ROSE	PINK	ROSA
D	GRAU	GRIS	GRIS	GREY	GRIGIO
E	GRÜN	VERDE	VERT	GREEN	VERDE
F	BLAU	AZUL SCURO	BLEU	BLUE	BLU
G	GELB	AMARILLO	JAUNE	YELLOW	GIALLO
H	HELLBLAU	AZUL	BLEU CIEL	LIGHT BLUE	AZZURRO
M	BRAUN	MARRÓN	MARRON	BROWN	MARRONE
N	SCHWARZ	NEGRO	NOIR	BLACK	NERO
R	ROT	ROJO	ROUGE	RED	ROSSO
V	VIOLETT	VIOLETA	VIOLET	PURPLE	VIOLA

BCS

SERIE

MA.TRA

SCHEMA ELETTRICO "BASE"

(PER LEGENDA POS./CODICI VEDI TAV. T01/1)

ELECTRICAL DIAGRAM
(FOR LEGEND POS./CODES SEE TABLE T01/1)

ESQUEMA ELÉCTRICO
(PARA LA LEYENDAS POS./CODICOS VEER LA TABLA T01/1)

SCHÉMA ÉLECTRIQUE
(POUR LÉGENDE POS./REFERENCES VOIR LA PLANCHE T01/1)

SCHALTPLAN
(FÜR ZEICHENERKLÄRUNG DER POS./NUMMERN SIEHE PLÄNE T01/1)

DALLA MACCHINA
DE LA MAQUINA
DE LA MACHINE
FROM THE MACHINE
AB DER MASCHINE
N.

ex TAVOLA T01/0
ex TABLE T01/0
ex PLANCHE T01/0
ex TABLA T01/0
ex PLÄNE T01/0

S02

Mod. 0

2/1999

2ENNE

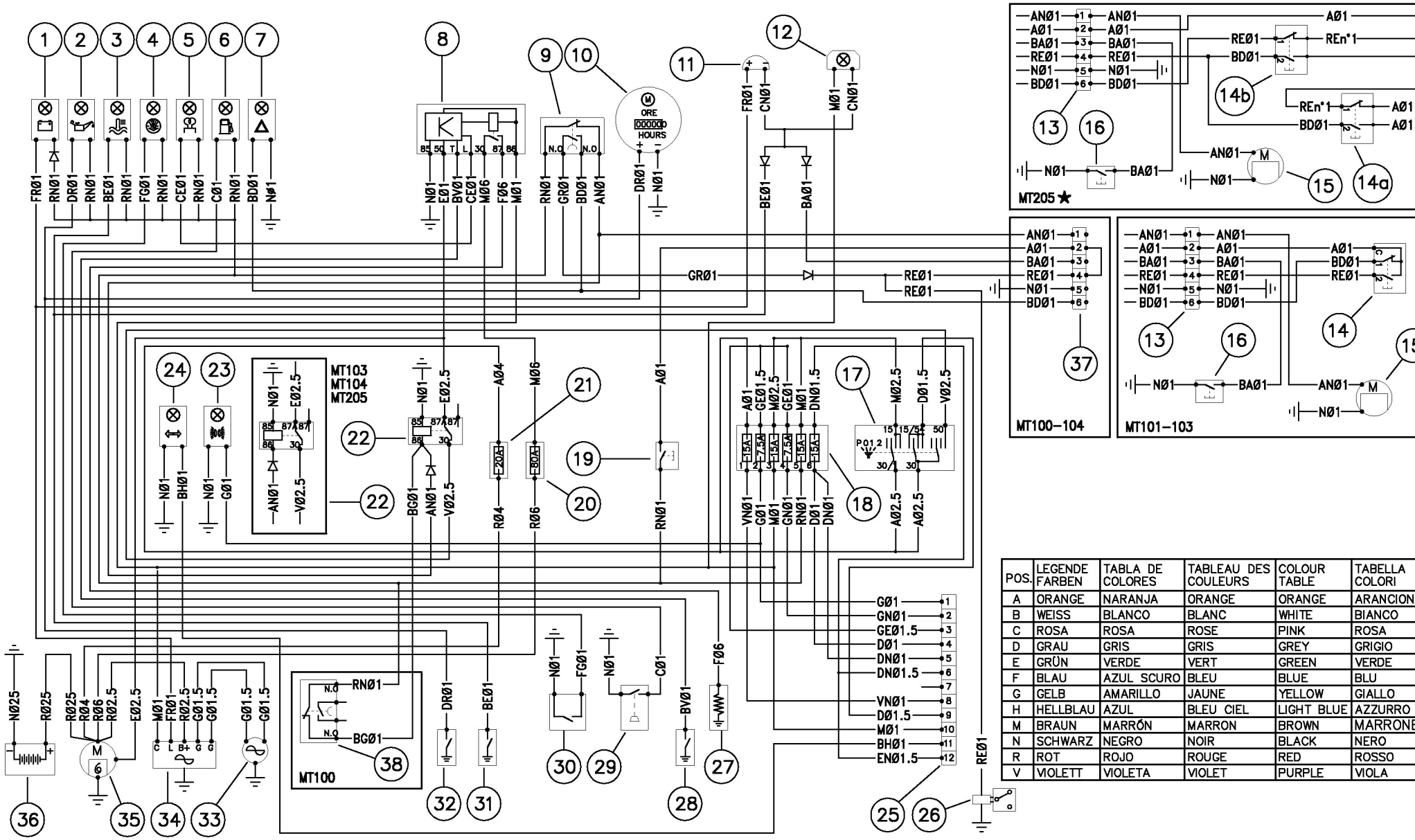

POS.	LEGENDE FARBEN	TABLA DE COLORES	TABLEAU DES COULEURS	COLOUR TABLE	TABELLA COLORI
A	ORANGE	NARANJA	ORANGE	ORANGE	ARANCION
B	WEISS	BLANCO	BLANC	WHITE	BIANCO
C	ROSA	ROSA	ROSE	PINK	ROSA
D	GRAU	GRIS	GRIS	GREY	GRIGIO
E	GRÜN	VERDE	VERT	GREEN	VERDE
F	BLAU	AZUL SCURO	BLEU	BLUE	BLU
G	GELB	AMARILLO	JAUNE	YELLOW	GIALLO
H	HELLBLAU	AZUL	BLEU CIEL	LIGHT BLUE	AZZURRO
M	BRAUN	MARRÓN	MARRON	BROWN	MARRONE
N	SCHWARZ	NEGRO	NOIR	BLACK	NERO
R	ROT	ROJO	ROUGE	RED	ROSSO
V	VIOLETT	VIOLETA	VIOLET	PURPLE	VIOLA

BCS

SERIE

MA.TRA

SCHEMA ELETTRICO "BASE"

(PER LEGENDA POS./CODICI VEDI TAV. T01/1)

ELECTRICAL DIAGRAM
(FOR LEGEND POS./CODES SEE TABLE T01/1)

ESQUEMA ELÉCTRICO
(PARA LA LEYENDAS POS./CODIGOS VEER LA TABLA T01/1)

SCHÉMA ÉLECTRIQUE
(POUR LÈGENDE POS./REFERENCES VOIR LA PLANCHE T01/1)

SCHALTPLAN
(FÜR ZEICHENERKLÄRUNG DER POS./NUMMERN SIEHE PLÄNE T01/1)

DALLA MACCHINA
DE LA MAQUINA
DE LA MACHINE
FROM THE MACHINE
AB DER MASCHINE

★N.

760560

S02

03/200

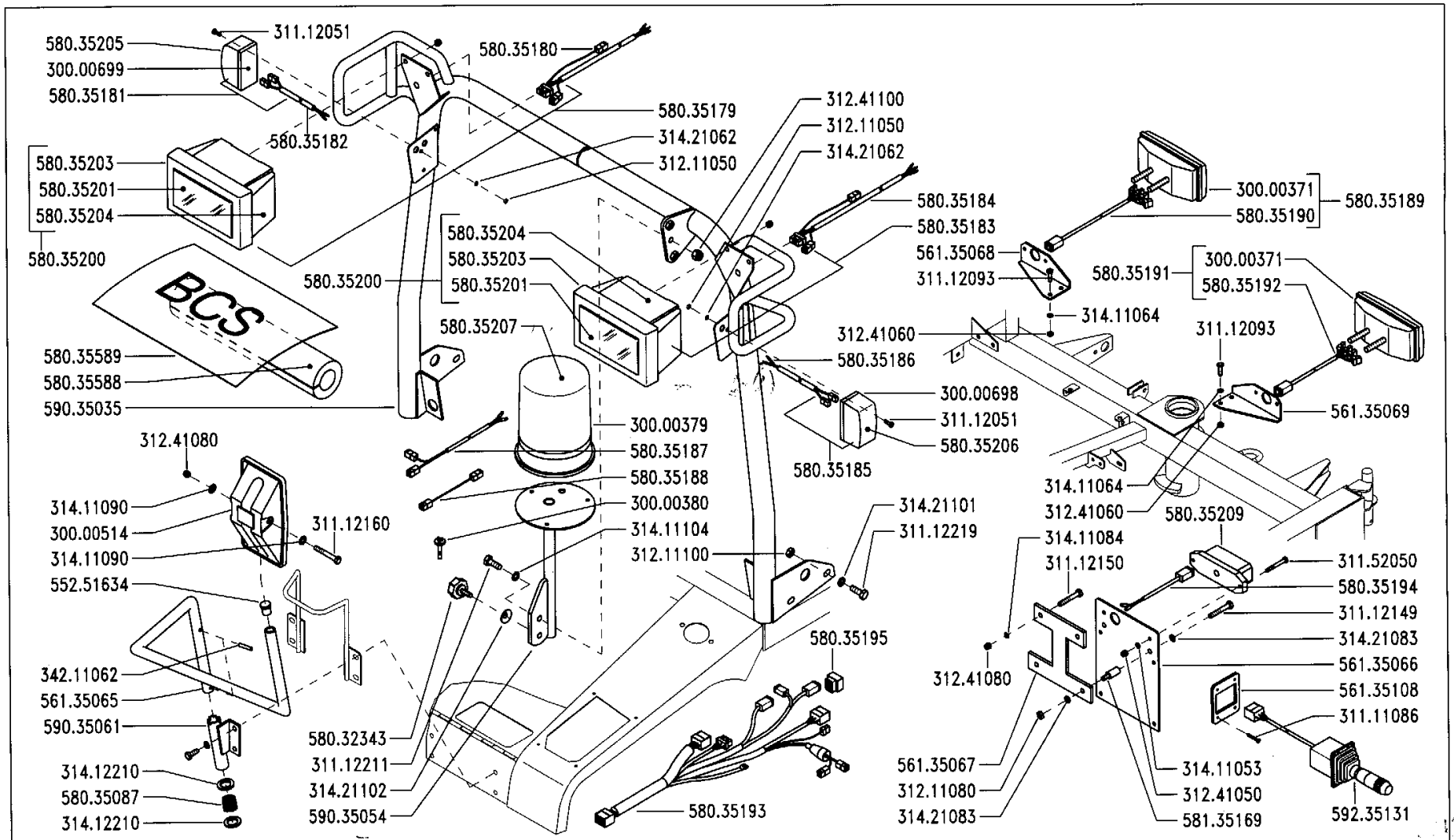

BCS	SERIE MA.TRA	IMPIANTO ELETTRICO "VARIANTE LUCI" (MT100-101-103-104) ELECTRICAL INSTALLATION "LIGHT VARIATION" INSTALLATION ÉLECTRIQUE "MODIFICATION DES FEUX" DISPOSITIVO ELÉCTRICO "VARIANTE LUCES" ELEKTRISCHE ANLAGE "LICHTVARIANTE"	DALLA MACCHINA DE LA MAQUINA DE LA MACHINE FROM THE MACHINE AB DER MASCHINE N.		S03 Mod. 0 3/2000 2ENNE

Pos.	Code	Q.ty	Description	Notes
30000371	30000371	0	LAMP	
30000379	30000379	0	ROTARY WARN. LAMP	
30000380	30000380	0	SWITCH	
30000514	30000514	0	REAR VIEW MIRROR	
30000698	30000698	0	ARROW	
30000699	30000699	0	ARROW	
31111086	31111086	0	SCREW TE M4X25 UNI 5739 8G	
31112051	31112051	0	SCREW TE M5X14 UNI 5739 8G	
31112093	31112093	0	SCREW TE M6X20	
31112149	31112149	0	SCREW TE M8X12 UNI 5739 8G	
31112150	31112150	0	SCREW TE M8X20 UNI 5739 8G	
31112160	31112160	0	SCREW TE M8X55 UNI 5737 8G	
31112211	31112211	0	SCREW TE M10X30 UNI 5739	
31112219	31112219	0	SCREW TE M10X25 UNI 5739	
31152050	31152050	0	SCREW TCEI M5X20 UNI 5931	
31211050	31211050	0	NUT M5	
31211080	31211080	0	NUT M8	
31211100	31211100	0	NUT M10	
31241050	31241050	0	SELFLOCK NUT M5 6S	
31241060	31241060	0	HEXAGON SELFLOCK NUT M6	
31241080	31241080	0	HEXAGON SELFLOCK NUT M8	
31241100	31241100	0	SELFLOCK HEXAGON NUT M10	
31411053	31411053	0	WASHER 5,3x10	
31411064	31411064	0	WASHER 6,4x12,5	
31411084	31411084	0	WASHER 8,4x17	
31411090	31411090	0	WASHER 9x24	
31411104	31411104	0	WASHER 10,5x18	
31412210	31412210	0	WASHER 21	
31421062	31421062	0	WASHER	
31421083	31421083	0	WASHER	
31421101	31421101	0	WASHER	
31421102	31421102	0	CUP SPRING 28X10,2X1,25 DIN 2093	
34211062	34211062	0	ROLL PIN	
55251634	55251634	0	PLUG D20 MP8522	

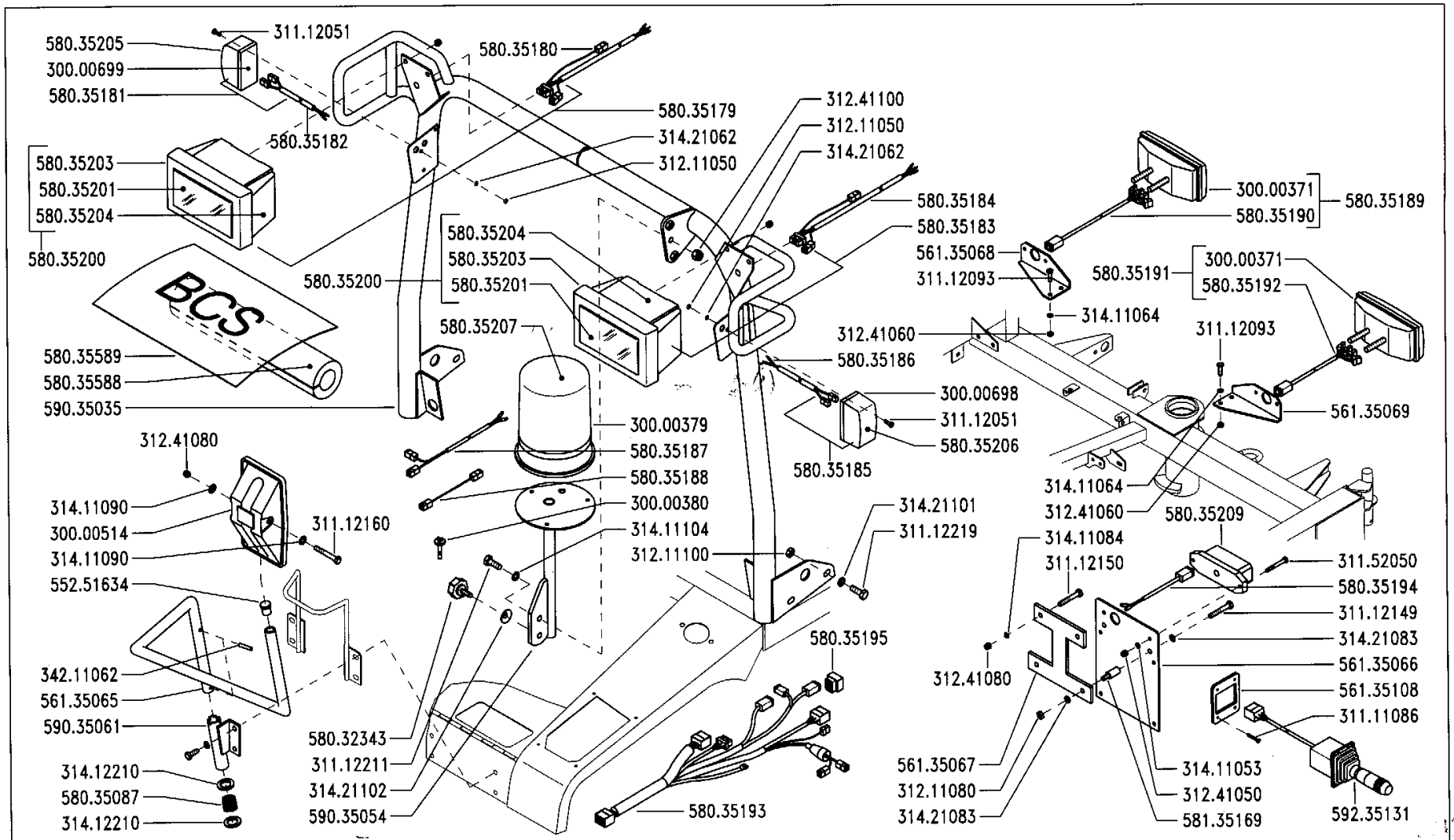

BCS	SERIE MA.TRA	IMPIANTO ELETTRICO "VARIANTE LUCI" (MT100-101-103-104) ELECTRICAL INSTALLATION "LIGHT VARIATION" INSTALLATION ÉLECTRIQUE "MODIFICATION DES FEUX" DISPOSITIVO ELÉCTRICO "VARIANTE LUCES" ELEKTRISCHE ANLAGE "LICHTVARIANTE"	DALLA MACCHINA DE LA MAQUINA DE LA MACHINE FROM THE MACHINE AB DER MASCHINE N.		S03 Mod. 0 3/2000 2ENNE

Pos.	Code	Q.ty	Description	Notes
56135065	56135065	0	PIPE	
56135066	56135066	0	PLATE HOLDER	
56135067	56135067	0	SUPPORT	
56135068	56135068	0	SUPPORT	
56135069	56135069	0	SUPPORT	
56135108	56135108	0	FIXING PLATE	
58032343	58032343	0	HAND WHEEL	
58035087	58035087	0	SPRING	
58035179	58035179	0	LAMP	
58035180	58035180	0	WIRING	
58035181	58035181	0	ARROW	
58035182	58035182	0	WIRING	
58035183	58035183	0	LAMP	
58035184	58035184	0	WIRING	
58035185	58035185	0	ARROW	
58035186	58035186	0	WIRING	
58035187	58035187	0	WIRING	
58035188	58035188	0	RUBBER-COATED CABLE	
58035189	58035189	0	LAMP	
58035190	58035190	0	WIRING	
58035191	58035191	0	LAMP	
58035192	58035192	0	WIRING	
58035193	58035193	0	WIRING	
58035194	58035194	0	WIRING	
58035195	58035195	0	ATTACHMENT PLUG	
58035200	58035200	0	UNIT	
58035201	58035201	0	HEADLIGHT	
58035203	58035203	0	FRAME	
58035204	58035204	0	BODY	
58035205	58035205	0	GLASS	
58035206	58035206	0	GLASS	
58035207	58035207	0	CAP	
58035209	58035209	0	LAMP	
58035588	58035588	0	HEAD-SUPPORT	

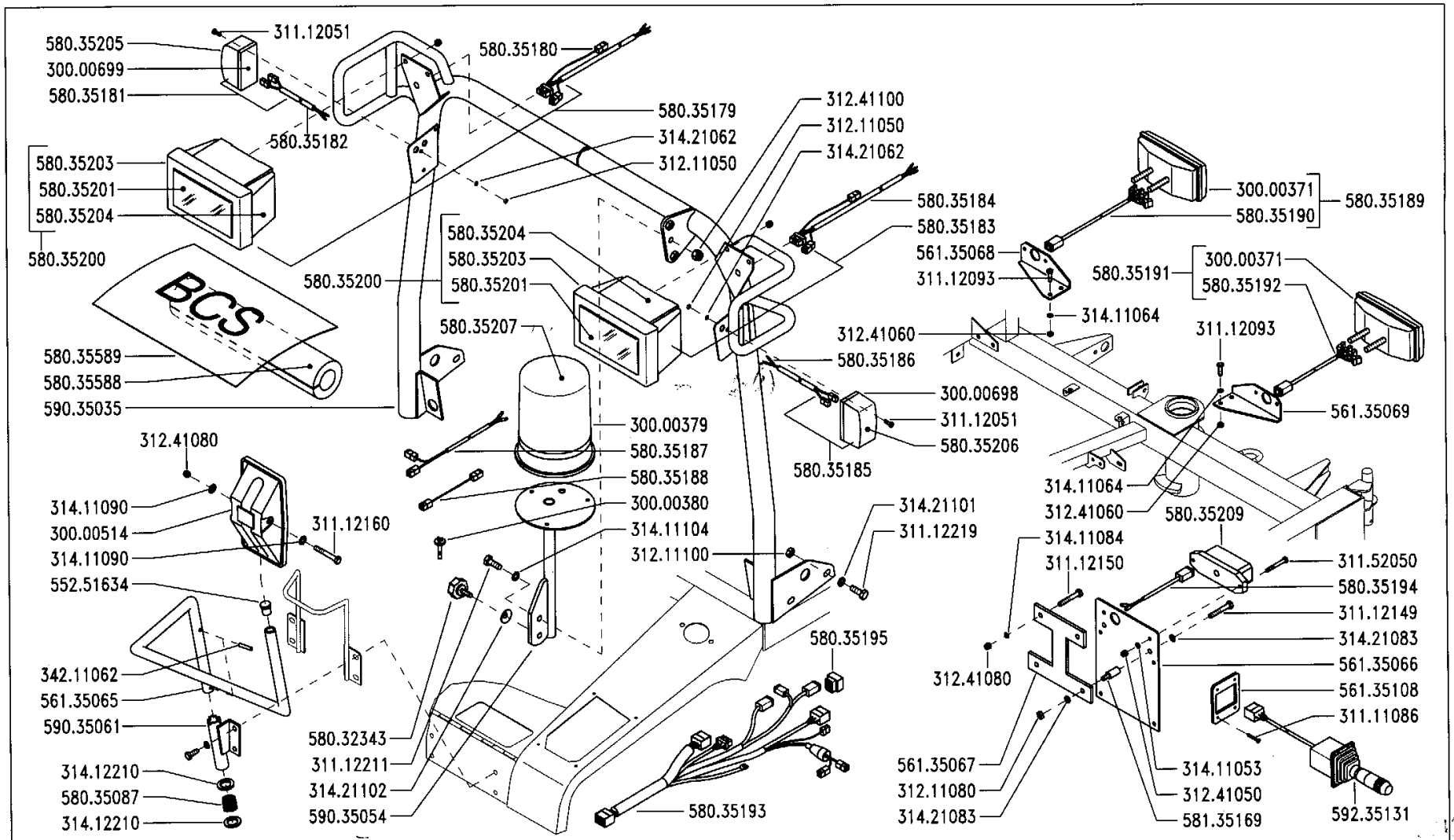

BCS	SERIE MA.TRA	IMPIANTO ELETTRICO "VARIANTE LUCI" (MT100-101-103-104) ELECTRICAL INSTALLATION "LIGHT VARIATION" INSTALLATION ÉLECTRIQUE "MODIFICATION DES FEUX" DISPOSITIVO ELÉCTRICO "VARIANTE LUCES" ELEKTRISCHE ANLAGE "LICHTVARIANTE"	DALLA MACCHINA DE LA MAQUINA DE LA MACHINE FROM THE MACHINE AB DER MASCHINE N.		S03 Mod. 0 3/2000 2ENNE

Pos.	Code	Q.ty	Description	Notes
58035589	58035589	0	COVER	
58135169	58135169	0	VIBRATION-DAMPING	
59035035	59035035	0	SUPPORT	
59035054	59035054	0	SUPPORT	
59035061	59035061	0	SUPPORT	
59235131	59235131	0	SIGNAL SWITCH	

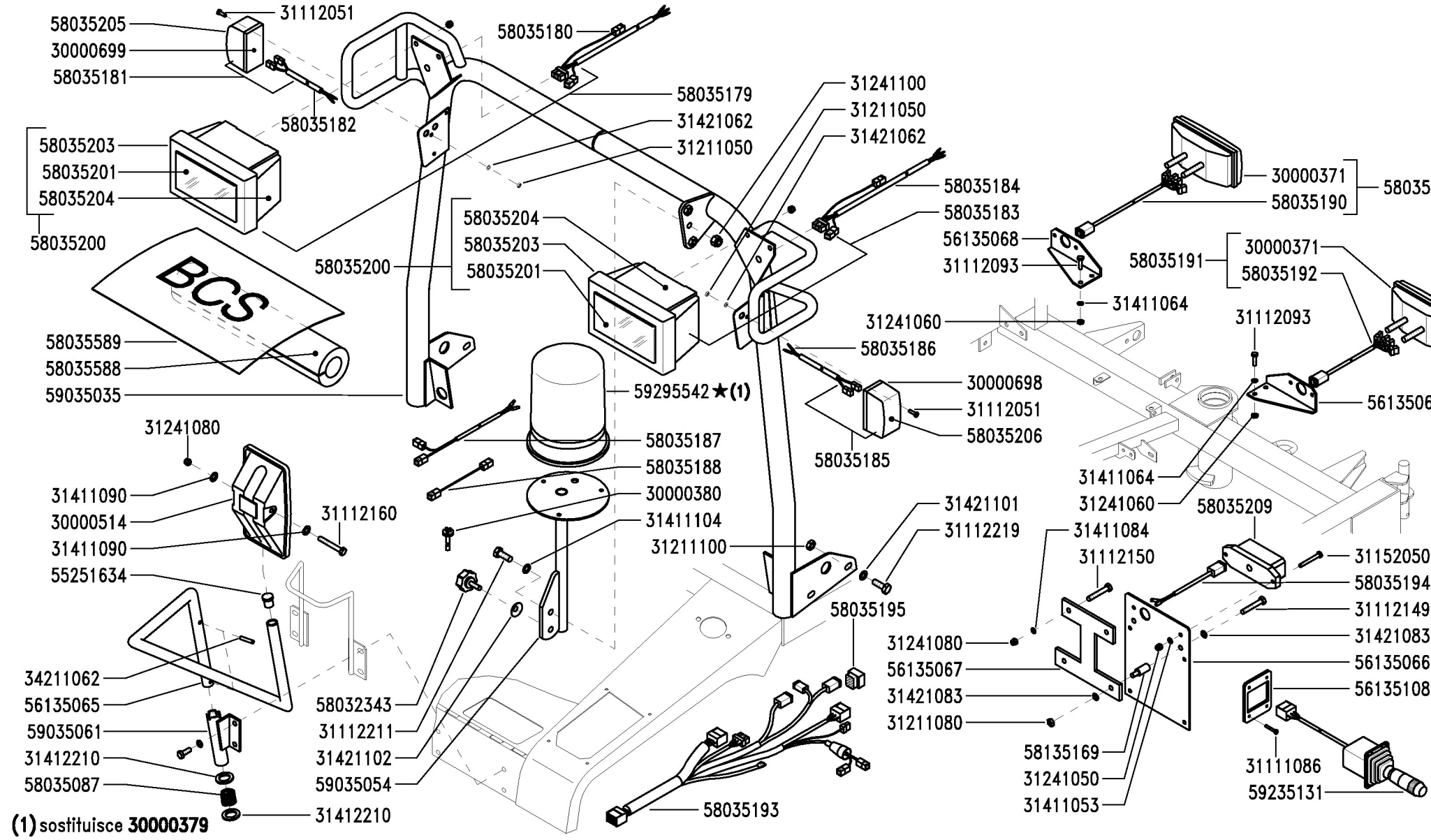

(1) sostituisce **30000379**

BCS	SERIE MA.TRA	IMPIANTO ELETTRICO "VARIANTE LUCI" (MT100-101-103-104) ELECTRICAL INSTALLATION "LIGHT VARIATION" INSTALLATION ÉLECTRIQUE "MODIFICATION DES FEUX" DISPOSITIVO ELÉCTRICO "VARIANTE LUCES" ELEKTRISCHE ANLAGE "LICHTVARIANTE"	DALLA MACCHINA DE LA MAQUINA DE LA MACHINE FROM THE MACHINE AB DER MASCHINE ★N.	816773	S03 06/200

Pos.	Code	Q.ty	Description	Notes
30000371	30000371	1	LAMP	
30000380	30000380	1	SWITCH	
30000514	30000514	1	REAR VIEW MIRROR	
30000698	30000698	1	ARROW	
30000699	30000699	1	ARROW	
31111086	31111086	1	SCREW TE M4X25 UNI 5739 8G	
31112051	31112051	1	SCREW TE M5X14 UNI 5739 8G	
31112093	31112093	1	SCREW TE M6X20	
31112149	31112149	1	SCREW TE M8X12 UNI 5739 8G	
31112150	31112150	1	SCREW TE M8X20 UNI 5739 8G	
31112160	31112160	1	SCREW TE M8X55 UNI 5737 8G	
31112211	31112211	1	SCREW TE M10X30 UNI 5739	
31112219	31112219	1	SCREW TE M10X25 UNI 5739	
31152050	31152050	1	SCREW TCEI M5X20 UNI 5931	
31211050	31211050	1	NUT M5	
31211080	31211080	1	NUT M8	
31211100	31211100	1	NUT M10	
31241050	31241050	1	SELFLOCK NUT M5 6S	
31241060	31241060	1	HEXAGON SELFLOCK NUT M6	
31241080	31241080	1	HEXAGON SELFLOCK NUT M8	
31241100	31241100	1	SELFLOCK HEXAGON NUT M10	
31411053	31411053	1	WASHER 5,3x10	
31411064	31411064	1	WASHER 6,4x12,5	
31411084	31411084	1	WASHER 8,4x17	
31411090	31411090	1	WASHER 9x24	
31411104	31411104	1	WASHER 10,5x18	
31412210	31412210	1	WASHER 21	
31421062	31421062	1	WASHER	
31421083	31421083	1	WASHER	
31421101	31421101	1	WASHER	
31421102	31421102	1	CUP SPRING 28X10,2X1,25 DIN 2093	
34211062	34211062	1	ROLL PIN	
55251634	55251634	1	PLUG D20 MP8522	
56135065	56135065	1	PIPE	

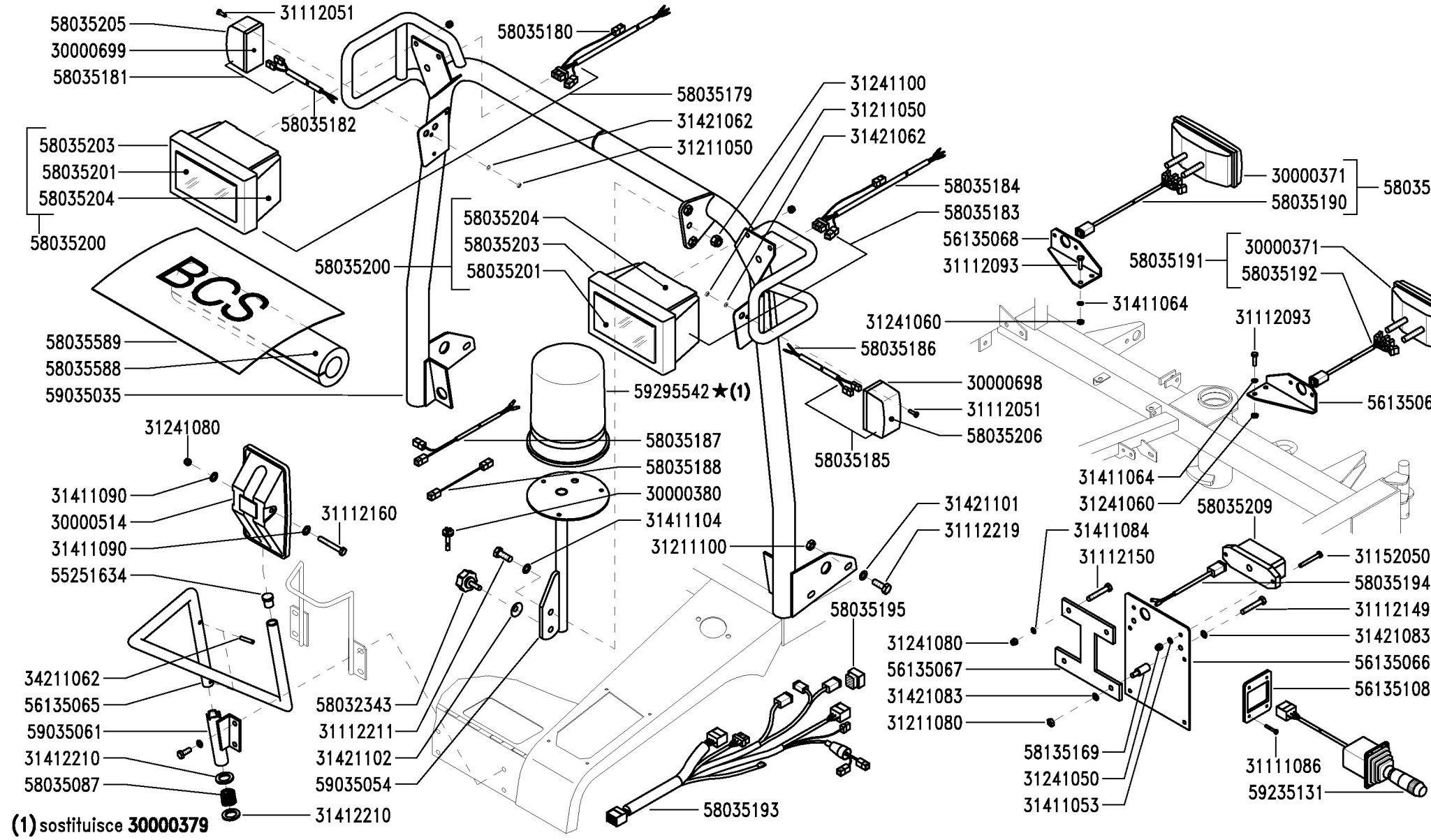

(1) sostituisce **30000379**

BCS	SERIE MA.TRA	IMPIANTO ELETTRICO "VARIANTE LUCI" (MT100-101-103-104) ELECTRICAL INSTALLATION "LIGHT VARIATION" INSTALLATION ÉLECTRIQUE "MODIFICATION DES FEUX" DISPOSITIVO ELÉCTRICO "VARIANTE LUCES" ELEKTRISCHE ANLAGE "LICHTVARIANTE"	DALLA MACCHINA DE LA MAQUINA DE LA MACHINE FROM THE MACHINE AB DER MASCHINE ★N.	816773	S03 06/200

Pos.	Code	Q.ty	Description	Notes
56135066	56135066	1	PLATE HOLDER	
56135067	56135067	1	SUPPORT	
56135068	56135068	1	SUPPORT	
56135069	56135069	1	SUPPORT	
56135108	56135108	1	FIXING PLATE	
58032343	58032343	1	HAND WHEEL	
58035087	58035087	1	SPRING	
58035179	58035179	1	LAMP	
58035180	58035180	1	WIRING	
58035181	58035181	1	ARROW	
58035182	58035182	1	WIRING	
58035183	58035183	1	LAMP	
58035184	58035184	1	WIRING	
58035185	58035185	1	ARROW	
58035186	58035186	1	WIRING	
58035187	58035187	1	WIRING	
58035188	58035188	1	RUBBER-COATED CABLE	
58035189	58035189	1	LAMP	
58035190	58035190	1	WIRING	
58035191	58035191	1	LAMP	
58035192	58035192	1	WIRING	
58035193	58035193	1	WIRING	
58035194	58035194	1	WIRING	
58035195	58035195	1	ATTACHMENT PLUG	
58035200	58035200	1	UNIT	
58035201	58035201	1	HEADLIGHT	
58035203	58035203	1	FRAME	
58035204	58035204	1	BODY	
58035205	58035205	1	GLASS	
58035206	58035206	1	GLASS	
58035209	58035209	1	LAMP	
58035588	58035588	1	HEAD-SUPPORT	
58035589	58035589	1	COVER	
58135169	58135169	1	VIBRATION-DAMPING	

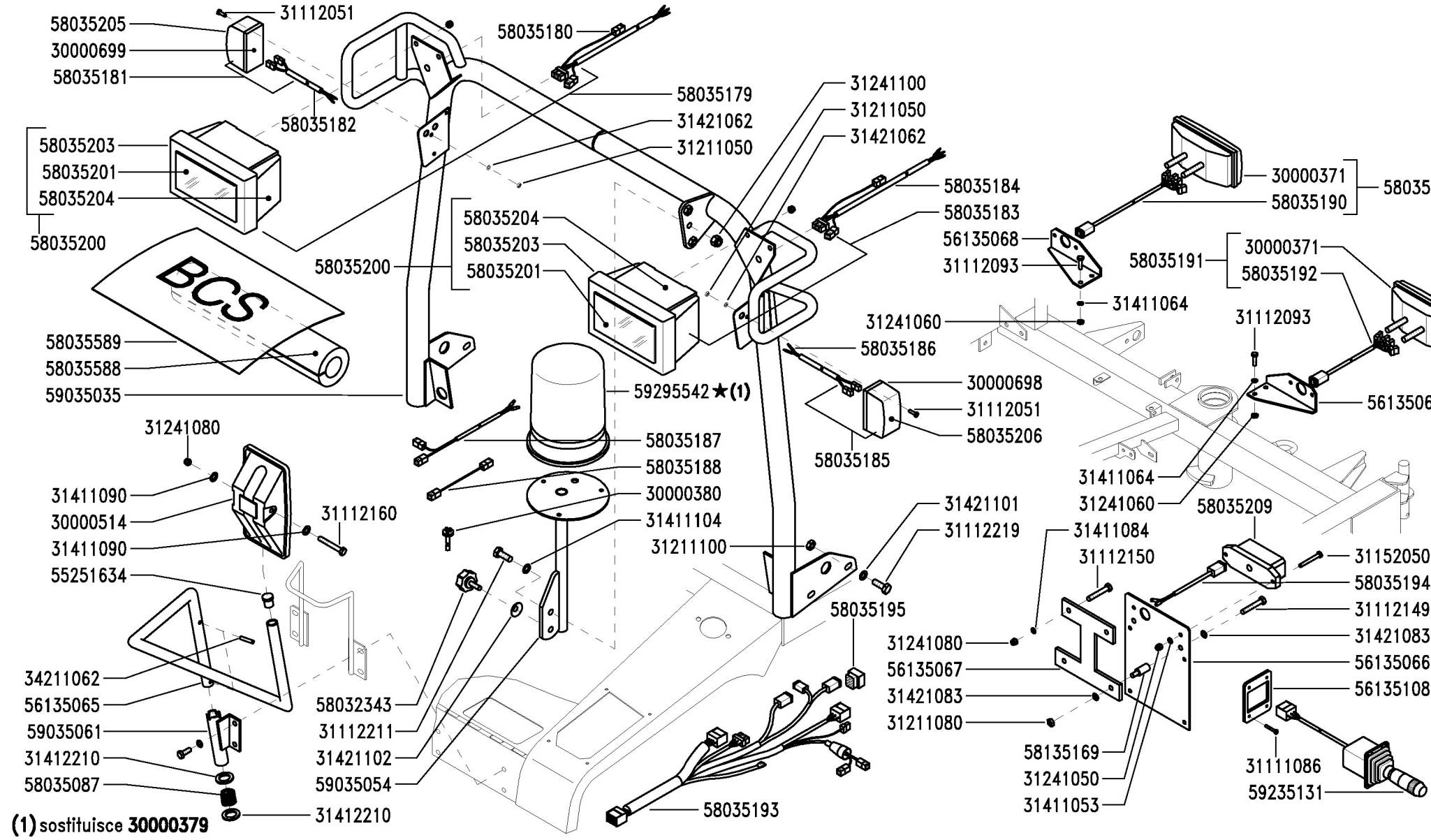

(1) sostituisce **30000379**

BCS	SERIE MA.TRA	IMPIANTO ELETTRICO "VARIANTE LUCI" (MT100-101-103-104) ELECTRICAL INSTALLATION "LIGHT VARIATION" INSTALLATION ÉLECTRIQUE "MODIFICATION DES FEUX" DISPOSITIVO ELÉCTRICO "VARIANTE LUCES" ELEKTRISCHE ANLAGE "LICHTVARIANTE"	DALLA MACCHINA DE LA MAQUINA DE LA MACHINE FROM THE MACHINE AB DER MASCHINE ★N.	816773	S03 06/200

Pos.	Code	Q.ty	Description	Notes
59035035	59035035	1	SUPPORT	
59035054	59035054	1	SUPPORT	
59035061	59035061	1	SUPPORT	
59235131	59235131	1	SIGNAL SWITCH	
59295542	59295542	1	WARNING FACILITY	

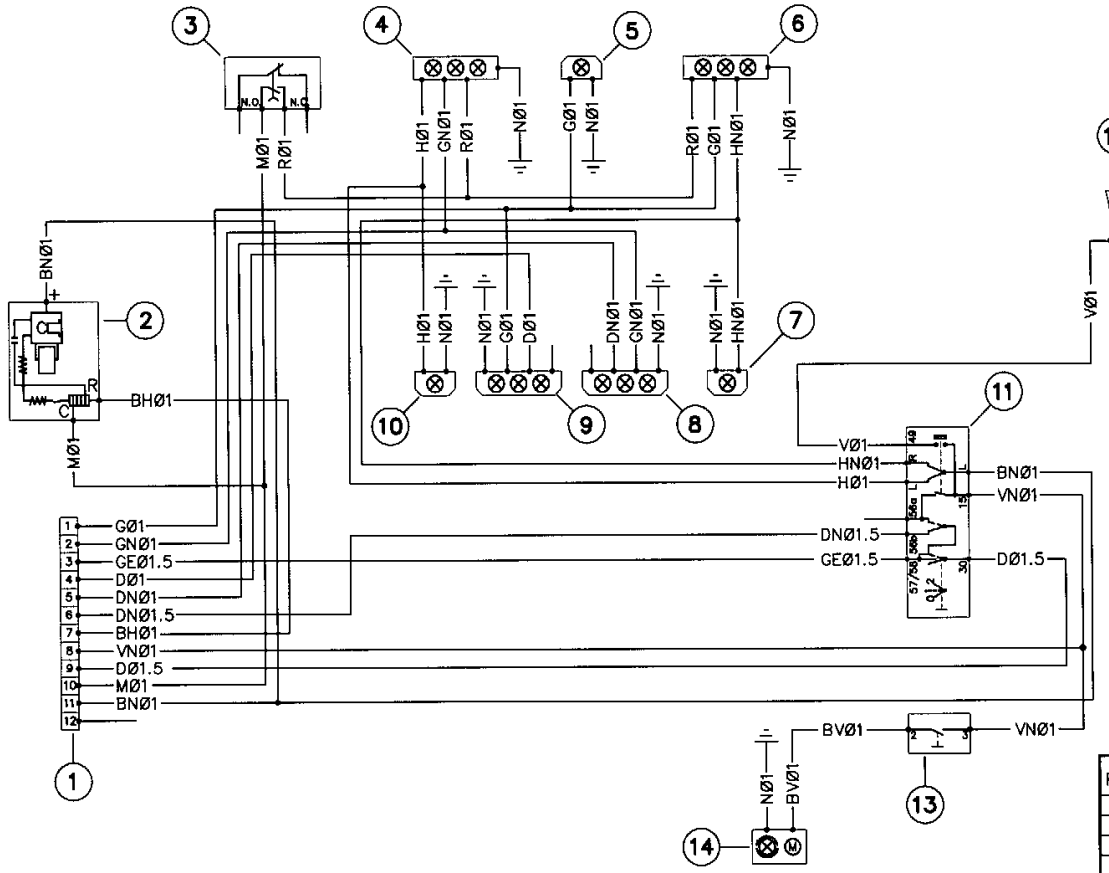

POS.	LEGENDE FARBEN	TABLA DE COLORES	TABLEAU DES COULEURS	COLOUR TABLE	TABELLA COLORI
A	ORANGE	NARANJA	ORANGE	ORANGE	ARANCIONE
B	WEISS	BLANCO	BLANC	WHITE	BIANCO
C	ROSA	ROSA	ROSE	PINK	ROSA
D	GRAU	GRIS	GRIS	GREY	GRIGIO
E	GRÜN	VERDE	VERT	GREEN	VERDE
F	BLAU	AZUL SCURO	BLEU	BLUE	BLU
G	GELB	AMARILLO	JAUNE	YELLOW	GIALLO
H	HELLBLAU	AZUL	BLEU CIEL	LIGHT BLUE	AZZURRO
M	BRAUN	MARRÓN	MARRON	BROWN	MARRONE
N	SCHWARZ	NEGRO	NOIR	BLACK	NERO
R	ROT	ROJO	ROUGE	RED	ROSSO
V	VIOLETT	VIOLETA	VIOLET	PURPLE	VIOLA

BCS

SERIE

MA.TRA

SCHEMA ELETTRICO "VARIANTE LUCI"

(PER LEGENDA POS./CODICI VEDI TAV. T02)

ELECTRICAL DIAGRAM "LIGHT VARIATION"
(FOR LEGEND POS./CODES SEE TABLE T02)

SCHÉMA ÉLECTRIQUE "MODIFICATION DES FEUX"
(POUR LÉGENDE POS./REFERENCES VOIR LA PLANCHE T02)

ESQUEMA ELÉCTRICO "VARIANTE LUCES"
(PARA LA LEYENDAS POS./CODIGOS VEER LA TABLA T02)

SCHALTPLAN "LICHTVARIANTE"
(FÜR ZEICHENERKLÄRUNG DER POS./NUMMERN SIEHE PLÄNE T02)

DALLA MACCHINA
DE LA MAQUINA
DE LA MACHINE
FROM THE MACHINE
AB DER MASCHINE
N.

S05

Mod. 0

3/2000

2ENNE

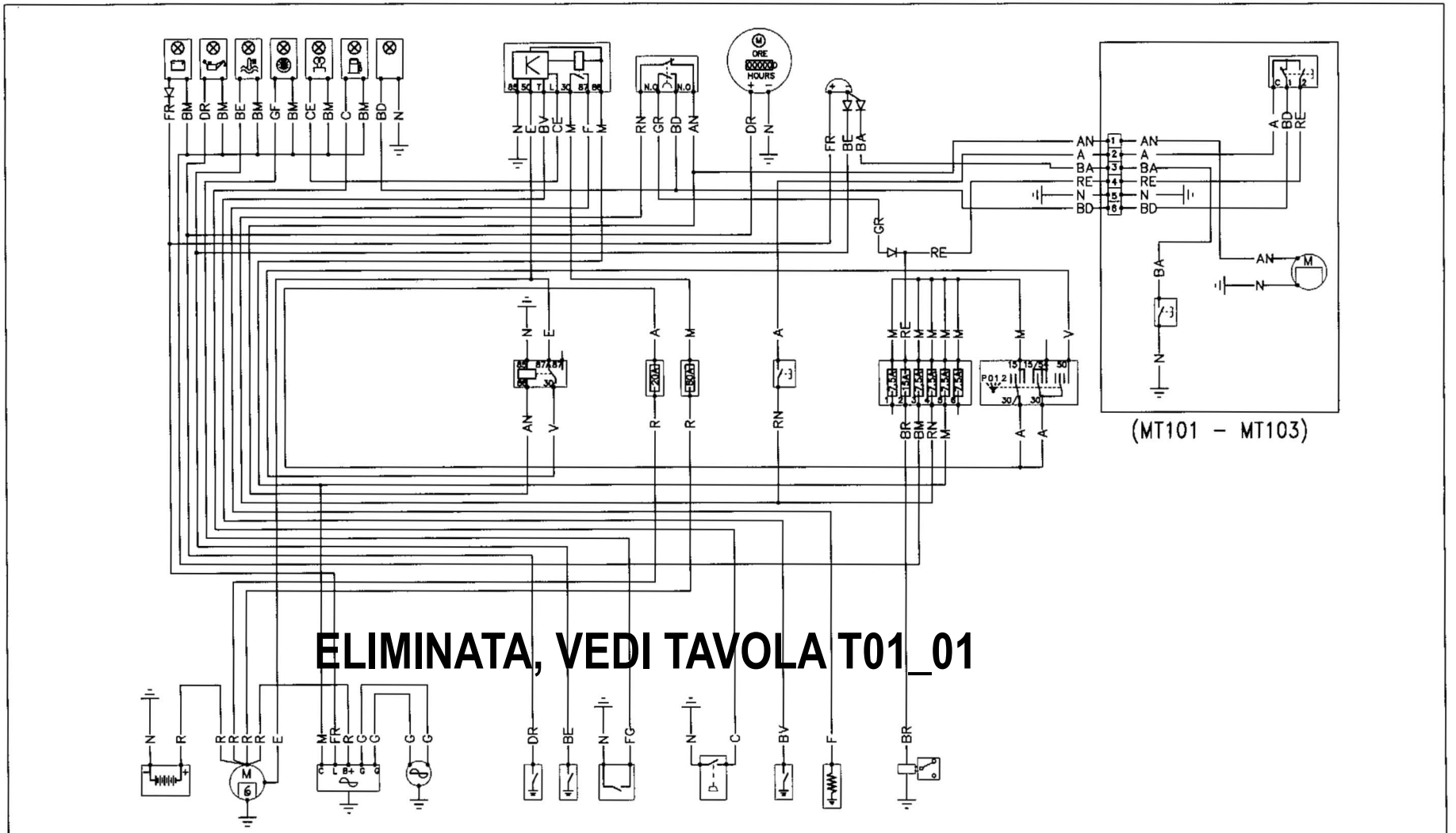

ELIMINATA, VEDI TAVOLA T01_01

BCS	SERIE MA.TRA	SCHEMA ELETTRICO SENZA FARI ELECTRICAL WIRING DIAGRAM HEADLIGHTS EXCLUDED — SCHÉMA ÉLECTRIQUE SANS PHARES ESQUEMA ELÉCTRICO SIN FAROS — SCHALTPLAN OHNE SCHEINWERFER	DALLA MACCHINA DE LA MAQUINA DE LA MACHINE FROM THE MACHINE AB DER MASCHINE N.	PRODUZIONE 1998 PRODUCCIÓN 1998 PRODUCTION 1998 PRODUCTION 1998 PRODUKTION 1998	T01 1/1999	Mod. 0

Pos	BEZEICHNUNG	DENOMINACIÓN	DÉNOMINATION	DENOMINATION	DENOMINAZIONE	CODICE
1	Kontrolleuchte Generator	Testigo del generador	Témoin du générateur	Dynamo warning light	Spia generatore	580.35260
2	Kontrolleuchte Druck Motoröl	Testigo presión del aceite del motor	Témoin de la pression de l'huile du moteur	Engine oil pressure warning light	Spia pressione olio motore	580.35256
3	Kontrolleuchte Wassertemperatur	Testigo temperatura del agua	Témoin de la température de l'eau	Water temperature warning light	Spia temperatura acqua	580.35257
4	Signallampe Luftfilter verstopft	Testigo filtro del aire atascado	Témoin du filtre de l'air bouché	Air filter blocked warning light	Spia filtro aria intasato	580.35262
5	Signallampe Kerzen	Testigo bujías	Témoin des bougies	Heater warning light	Spia candelette	580.35259
6	Kontrolleuchte Treibstoffreserve	Testigo reserva de carburante	Témoin réserve du carburant	Fuel reserve warning light	Spia riserva carburante	580.35258
7	Kontrolleuchte Behälter hochgeklappt	Testigo cajón levantado	Témoin bac soulevé	Grass box raised warning light	Spia cassone alzato	580.35261
8	Gehäuse Vorwämkerzen	Centralita de bujías de calentamiento previo	Centrale bougies de préchauffage	Heater management system	Centralina candelette preriscaldo	F083.4378001
9	P.T.O. – Schalter	Interruptor P.T.O.	Interrupteur P.T.O.	P.T.O. switch	Interruttore P.T.O.	300.00638
10	Stundenzähler	Intrumento contador	Instrument pour le compte des heures	Hour meter	Strumento conta-ore	580.35254
11	Alarmsummer	Zumbador alarmas	Sonnerie d'alarme	Buzzer	Cicalino allarme	580.35255
12	Kontrolleuchte hoher Wassertemperatur, Behälter voll	Testigo temperatura alta del agua cajón lleno	Témoin d'eau de température élevée, bac plein	Water overheating switch, collector full	Spia alta temperatura acqua, cassone pieno	Rif. COBO
13	Verbinder Behälteranlage (MT101/103/205)	Conector instalación del cajón (MT101/103/205)	Connecteur de l'installation du bac (MT101/103/205)	Connector collector system (MT101/103/205)	Connettore impianto cassone (MT101/103/205)	580.35195
14	Behältermotor (MT101/103/205)	Interruptor del cajón (MT101/103/205)	Interrupteur du bac (MT101/103/205)	Collector switch (MT101/103/205)	Interruttore cassone (MT101/103/205)	580.25479
15	Motor Schüttelapparat (MT101/103/205)	Motor sacudidor (MT101/103/205)	Moteur secouant (MT101/103/205)	Engine beater (MT101/103/205)	Motore scuotitore (MT101/103/205)	581.24905
16	Schalter Behälter voll (MT101/103/205)	Interruptor cajón lleno (MT101/103/205)	Interrupteur du bac plein (MT101/103/205)	Grass box full switch (MT101/103/205)	Interruttore cassone pieno (MT101/103/205)	592.24908
17	Anlass – Schalter	Interruptor arranque	Interrupteur de mise en marche	Start switch	Interruttore avviamento	580.35252
18	Gehäuse Abschmelzsicherungen	Caja porta-fusibles	Boîte porte-fusibles	Fuse box	Scatola portafusibili	580.35264
19	Sitzschalter	Interruptor asiento	Interrupteur du siége	Seat start	Interruttore sedile	581.25855
20	Extragroße vorgewärmte Abschmelzsicherung	Maxi fusibles de calentamiento previo	Maxi fusible préchauffage	Maxi heater fuse	Maxi fusibile preriscaldo	580.35268
21	Extragroße Hauptabschmelzsicherung	Maxi fusible general	Maxi fusible général	Maxi general fuse	Maxi fusibile generale	580.35267
22	Relais Anlaßzustimmung	Relé de asenso arranque	Relais de consentement de mise en marche	Start-up relay	Relé consenso avviamento	580.35273
23	Kontrolleuchte Parklichter	Testigos luces de posición	Feux de position	Side lights	Spia luci di posizione	Rif. COBO
24	Kontrolleuchte Richtungsanzeiger	Testigos indicadores de dirección	Feux clignotants	Indicator light	Spia indicatori di direzione	Rif. COBO
25	Verbinder Anlage zum Strassenfahren	Conector de la instalación de homologación para carretera	Connecteur installation homologation routière	Electrical connections for road vehicles	Connettore impianto omologazione stradale	Rif. COBO
26	Elektroventil Motorabstellen	Electroválvula de parada del motor	Electrovanne d'arrêt du moteur	Engine stop valve	Elettrovalvola arresto motore	Rif. Lomb.
27	Vorwärmkerze	Bujía de calentamiento previo	Bougie de préchauffage	Heaters	Candeletta preriscaldo	Rif. Lomb.
28	Fühler Verwärmzentrale	Detector de la centralita de calentamiento previo	Senseur de la centrale préchauffage	Heater sensor management system	Sensore centralina preriscaldo	Rif. Lomb.
29	Treibstoffschwimmer	Flotador del carburante	Flotteur du carburant	Fuel float	Galleggiante carburante	581.24916
30	Fühler Luftfilter verstopft	Detector del filtro del aire atascado	Senseur du filtre de l'air bouché	Air filter blocked switch	Sensore filtro aria intasato	Rif. Lomb.
31	Fühler Wassertemperatur	Detector de la temperatura del agua	Senseur de la température de l'eau	Water temperature switch	Sensore temperatura acqua	Rif. Lomb.
32	Fühler Motoröldruck	Detector de la presión del aceite del motor	Senseur de la pression de l'huile du moteur	Engine oil pressure switch	Sensore pressione olio motore	Rif. Lomb.
33	Generator	Generador	Générateur	Dynamo	Generatore	Rif. Lomb.
34	Ladungsregler	Regulador de carga	Régulateur de chargement	Voltage regulator	Regolatore di carica	581.35697
35	Anlasser	Motor de arranque	Moteur de mise en marche	Starter motor	Motorino di avviamento	Rif. Lomb.
36	Batterie	Bateria	Batterie	Battery	Batteria	581.19799
37	Überbrückter Verbinder (MT100/104)	Conector conectado con penos en U (MT100/104)	Connecteur à crampillon (MT100/104)	Spring clip connector (MT100/104)	Connettore cavallotto (MT100/104)	Rif. COBO
38	Kupplungs – Schalter (MT100/101)	Interruptor embrague (MT100/101)	Interrupteur de débrayage (MT100/101)	Clutch switch (MT100/101)	Interruttore frizione (MT100/101)	300.00638

da MATR. 1480 (PRIMA EAN 581 25933)

BCS

SERIE

MA.TRA

★LEGENDA PER TAVOLE S01-S02

LEGEND FOR TABLES S01–S02

LEYENDAS POR TABLAS S01–S02

LÈGENDE POUR LES TABLES S01–S02

ZEICHENERKLÄRUNG FÜR DIE PLÄNE S01–S02

DALLA MACCHINA
DE LA MAQUINA
DE LA MACHINE
FROM THE MACHINE
AB DER MASCHINE

★N.

T01

Mod. 1

6/2001

2ENNE

Pos.	Code	Q.ty	Description	Notes
30000638	30000638	0	SWITCH	
58025479	58025479	0	SWITCH	
58035195	58035195	0	ATTACHMENT PLUG	
58035252	58035252	0	PANEL	
58035254	58035254	0	HOUR COUNTER 12-24V	
58035255	58035255	0	BUZZER	
58035256	58035256	0	WARNING LIGHT	
58035257	58035257	0	WARNING LIGHT	
58035258	58035258	0	WARNING LIGHT	
58035259	58035259	0	WARNING LIGHT	
58035260	58035260	0	WARNING LIGHT	
58035261	58035261	0	WARNING LIGHT	
58035262	58035262	0	WARNING LIGHT	
58035264	58035264	0	FUSE BOX	
58035267	58035267	0	FUSE/LOCK 20A	
58035268	58035268	0	FUSE/LOCK 80 A	
58035273	58035273	0	RELAY	
58119799	58119799	0	BATTERY	
58124905	58124905	0	ENGINE	
58124916	58124916	0	TANK INDICATOR	
58125855	58125855	0	SEAT	
58135697	58135697	0	REGULATOR	
59224908	59224908	0	SWITCH	
F0834378	F0834378001	0	CENTRAL PROCESSING UNIT	

Pos	BEZEICHNUNG	DENOMINACIÓN	DÉNOMINATION	DENOMINATION	DENOMINAZIONE	CODICE
1	Kontrolleuchte Generator	Testigo del generador	Témoin du générateur	Dynamo warning light	Spia generatore	580.35260
2	Kontrolleuchte Druck Motoröl	Testigo presión del aceite del motor	Témoin de la pression de l'huile du moteur	Engine oil pressure warning light	Spia pressione olio motore	580.35256
3	Kontrolleuchte Wassertemperatur	Testigo temperatura del agua	Témoin de la température de l'eau	Water temperature warning light	Spia temperatura acqua	580.35257
4	Signallampe Luftfilter verstopft	Testigo filtro del aire atascado	Témoin du filtre de l'air bouché	Air filter blocked warning light	Spia filtro aria intasato	580.35262
5	Signallampe Kerzen	Testigo bujías	Témoin des bougies	Heater warning light	Spia candelette	580.35259
6	Kontrolleuchte Treibstoffreserve	Testigo reserva de carburante	Témoin réserve du carburant	Fuel reserve warning light	Spia riserva carburante	580.35258
7	Kontrolleuchte Behälter hochgeklappt	Testigo cajón levantado	Témoin bac soulevé	Grass box raised warning light	Spia cassone alzato	580.35261
8	Gehäuse Vorwämkerzen	Centralita de bujías de calentamiento previo	Centrale bougies de préchauffage	Heater management system	Centralina candelette preriscaldo	F083.4378001
9	P.T.O. – Schalter	Interruptor P.T.O.	Interrupteur P.T.O.	P.T.O. switch	Interruttore P.T.O.	300.00638
10	Stundenzähler	Intrumento contador	Instrument pour le compte des heures	Hour meter	Strumento conta-ore	580.35254
11	Alarmsummer	Zumbador alarmas	Sonnerie d'alarme	Buzzer	Cicalino allarme	580.35255
12	Kontrolleuchte hoher Wassertemperatur, Behälter voll	Testigo temperatura alta del agua cajón lleno	Témoin d'eau de température élevée, bac plein	Water overheating switch, collector full	Spia alta temperatura acqua, cassone pieno	Rif. COBO
13	Verbinder Behälteranlage (MT101/103/205)	Conector instalación del cajón (MT101/103/205)	Connecteur de l'installation du bac (MT101/103/205)	Connector collector system (MT101/103/205)	Connettore impianto cassone (MT101/103/205)	580.35195
14	Behältermotor (MT101/103/205)	Interruptor del cajón (MT101/103/205)	Interrupteur du bac (MT101/103/205)	Collector switch (MT101/103/205)	Interruttore cassone (MT101/103/205)	580.25479
15	Motor Schüttelapparat (MT101/103/205)	Motor sacudidor (MT101/103/205)	Moteur secouant (MT101/103/205)	Engine beater (MT101/103/205)	Motore scuotitore (MT101/103/205)	581.24905
16	Schalter Behälter voll (MT101/103/205)	Interruptor cajón lleno (MT101/103/205)	Interrupteur du bac plein (MT101/103/205)	Grass box full switch (MT101/103/205)	Interruttore cassone pieno (MT101/103/205)	592.24908
17	Anlass – Schalter	Interruptor arranque	Interrupteur de mise en marche	Start switch	Interruttore avviamento	580,35252
18	Gehäuse Abschmelzsicherungen	Caja porta-fusibles	Boîte porte-fusibles	Fuse box	Scatola portafusibili	580.35264
19	Sitzschalter	Interruptor asiento	Interrupteur du siége	Seat start	Interruttore sedile	581.25855
20	Extragroße vorgewärmte Abschmelzsicherung	Maxi fusibles de calentamiento previo	Maxi fusible préchauffage	Maxi heater fuse	Maxi fusibile preriscaldo	580.35268
21	Extragroße Hauptabschmelzsicherung	Maxi fusible general	Maxi fusible général	Maxi general fuse	Maxi fusibile generale	580.35267
22	Relais Anlaßzustimmung	Relé de asenso arranque	Relais de consentement de mise en marche	Start-up relay	Relé consenso avviamento	580.35273
23	Kontrolleuchte Parklichter	Testigos luces de posición	Feux de position	Side lights	Spia luci di posizione	580.92358★
24	Kontrolleuchte Richtungsanzeiger	Testigos indicadores de dirección	Feux clignotants	Indicator light	Spia indicatori di direzione	580.92357★
25	Verbinder Anlage zum Strassenfahren	Conector de la instalación de homologación para carretera	Connecteur installation homologation routière	Electrical connections for road vehicles	Connettore impianto omologazione stradale	Rif. COBO
26	Elektroventil Motorabstellen	Electroválvula de parada del motor	Electrovanne d'arrêt du moteur	Engine stop valve	Elettrovalvola arresto motore	Rif. Lomb.
27	Vorwärmkerze	Bujia de calentamiento previo	Bougie de préchauffage	Heaters	Candeletta preriscaldo	Rif. Lomb.
28	Fühler Verwärmzentrale	Detector de la centralita de calentamiento previo	Senseur de la centrale préchauffage	Heater sensor management system	Sensore centralina preriscaldo	Rif. Lomb.
29	Treibstoffschwimmer	Flotador del carburante	Flotteur du carburant	Fuel float	Galleggiante carburante	581.24916
30	Fühler Luftfilter verstopft	Detector del filtro del aire atascado	Senseur du filtre de l'air bouché	Air filter blocked switch	Sensore filtro aria intasato	Rif. Lomb.
31	Fühler Wassertemperatur	Detector de la temperatura del agua	Senseur de la température de l'eau	Water temperature switch	Sensore temperatura acqua	Rif. Lomb.
32	Fühler Motoröldruck	Detector de la presión del aceite del motor	Senseur de la pression de l'huile du moteur	Engine oil pressure switch	Sensore pressione olio motore	Rif. Lomb.
33	Generator	Generador	Générateur	Dynamo	Generatore	Rif. Lomb.
34	Ladungsregler	Regulador de carga	Régulateur de chargement	Voltage regulator	Regolatore di carica	581.35697
35	Anlasser	Motor de arranque	Moteur de mise en marche	Starter motor	Motorino di avviamento	Rif. Lomb.
36	Batterie	Batería	Batterie	Battery	Batteria	581.19799
37	Überbrückter Verbinder (MT100/104)	Conector conectado con penos en U (MT100/104)	Connecteur à crampillon (MT100/104)	Spring clip connector (MT100/104)	Connettore cavallotto (MT100/104)	Rif. COBO
38	Kupplungs – Schalter (MT100/101)	Interruptor embrague (MT100/101)	Interrupteur de débrayage (MT100/101)	Clutch switch (MT100/101)	Interruttore frizione (MT100/101)	300.00638

BCS

SERIE

MA.TRA

LEGENDA PER TAVOLE S01-S02

LEGEND FOR TABLES S01–S02

LEYENDAS POR TABLAS S01–S02

LÈGENDE POUR LES TABLES S01–S02

ZEICHENERKLÄRUNG FÜR DIE PLÄNE S01–S02

DALLA MACCHINA
DE LA MAQUINA
DE LA MACHINE
FROM THE MACHINE
AB DER MASCHINE

★N.

AGGIORNAMENTO
APLAZAMIENTO
MISE A JOUR
REVISION
ANPASSUNG

T01

Rev 2

11/2002

Pos.	Code	Q.ty	Description	Notes
30000638	30000638	0	SWITCH	
58025479	58025479	0	SWITCH	
58035195	58035195	0	ATTACHMENT PLUG	
58035252	58035252	0	PANEL	
58035254	58035254	0	HOUR COUNTER 12-24V	
58035255	58035255	0	BUZZER	
58035256	58035256	0	WARNING LIGHT	
58035257	58035257	0	WARNING LIGHT	
58035258	58035258	0	WARNING LIGHT	
58035259	58035259	0	WARNING LIGHT	
58035260	58035260	0	WARNING LIGHT	
58035261	58035261	0	WARNING LIGHT	
58035262	58035262	0	WARNING LIGHT	
58035264	58035264	0	FUSE BOX	
58035267	58035267	0	FUSE/LOCK 20A	
58035268	58035268	0	FUSE/LOCK 80 A	
58035273	58035273	0	RELAY	
58092357	58092357	1	WARNING LIGHT	
58092358	58092358	1	WARNING LIGHT	
58119799	58119799	0	BATTERY	
58124905	58124905	0	ENGINE	
58124916	58124916	0	TANK INDICATOR	
58125855	58125855	0	SEAT	
58135697	58135697	0	REGULATOR	
59224908	59224908	0	SWITCH	
F0834378	F0834378001	0	CENTRAL PROCESSING UNIT	

Pos	BEZEICHNUNG	DENOMINACIÓN	DÉNOMINATION	DENOMINATION	DENOMINAZIONE	CODICE
1	Kontrolleuchte Generator	Testigo del generador	Témoin du générateur	Dynamo warning light	Spia generatore	58035260
2	Kontrolleuchte Druck Motoröl	Testigo presión del aceite del motor	Témoin de la pression de l'huile du moteur	Engine oil pressure warning light	Spia pressione olio motore	58035256
3	Kontrolleuchte Wassertemperatur	Testigo temperatura del agua	Témoin de la température de l'eau	Water temperature warning light	Spia temperatura acqua	58035257
4	Signallampe Luftfilter verstopft	Testigo filtro del aire atascado	Témoin du filtre de l'air bouché	Air filter blocked warning light	Spia filtro aria intasato	58035262
5	Signallampe Kerzen	Testigo bujías	Témoin des bougies	Heater warning light	Spia candelette	58035259
6	Kontrolleuchte Treibstoffreserve	Testigo reserva de carburante	Témoin réserve du carburant	Fuel reserve warning light	Spia riserva carburante	58035258
7	Kontrolleuchte Behälter hochgeklappt	Testigo cajón levantado	Témoin bac soulevé	Grass box raised warning light	Spia cassone alzato	58035261
8	Gehäuse Vorwämkerzen	Centralita de bujías de calentamiento previo	Centrale bougies de préchauffage	Heater management system	Centralina candelette preriscaldo	F0834378001
9	P.T.O. – Schalter	Interruptor P.T.O.	Interrupteur P.T.O.	P.T.O. switch	Interruttore P.T.O.	30000638
10	Stundenzähler	Intrumento contador	Instrument pour le compte des heures	Hour meter	Strumento conta-ore	58035254
11	Alarmsummer	Zumbador alarmas	Sonnerie d'alarme	Buzzer	Cicalino allarme	58035255
12	Kontrolleuchte hoher Wassertemperatur, Behälter voll	Testigo temperatura alta del agua cajón lleno	Témoin d'eau de température élevée, bac plein	Water overheating switch, collector full	Spia alta temperatura acqua, cassone pieno	Rif. COBO
13	Verbinder Behälteranlage (MT101/103/205)	Conector instalación del cajón (MT101/103/205)	Connecteur de l'installation du bac (MT101/103/205)	Connector collector system (MT101/103/205)	Connettore impianto cassone (MT101/103/205)	58035195
14	Behältermotor (MT101/103)	Interruptor del cajón (MT101/103)	Interrupteur du bac (MT101/103)	Collector switch (MT101/103)	Interruttore cassone (MT101/103)	58025479
14a 14b	Klapphälter und hubhälter korb (MT205)	Interruptor de vuelco y de izado del cesto (MT205)	Interrupteur de basculement et soulevement du réservoir (MT205)	Collector flip back and raising micro-switch (MT205)	Micro-interruttore ribaltamento / sollevamento cassone (MT205)	58193269 ★
15	Motor Schüttelapparat (MT101/103/205)	Motor sacudidor (MT101/103/205)	Moteur secouant (MT101/103/205)	Engine beater (MT101/103/205)	Motore scuotitore (MT101/103/205)	58124905
16	Schalter Behälter voll (MT101/103/205)	Interruptor cajón lleno (MT101/103/205)	Interrupteur du bac plein (MT101/103/205)	Grass box full switch (MT101/103/205)	Interrutt. cassone pieno (MT101/103/205)	59224908
17	Anlass – Schalter	Interruptor arranque	Interrupteur de mise en marche	Start switch	Interruttore avviamento	58035252
18	Gehäuse Abschmelzsicherungen	Caja porta-fusibles	Boîte porte-fusibles	Fuse box	Scatola portafusibili	58035264
19	Sitzschalter	Interruptor asiento	Interrupteur du siége	Seat start	Interruttore sedile	58125855
20	Extragroße vorgewärmte Abschmelzsicherung	Maxi fusibles de calentamiento previo	Maxi fusible préchauffage	Maxi heater fuse	Maxi fusibile preriscaldo	58035268
21	Extragroße Hauptabschmelzsicherung	Maxi fusible general	Maxi fusible général	Maxi general fuse	Maxi fusibile generale	58035267
22	Relais Anlaßzustimmung	Relé de asenso arranque	Relais de consentement de mise en marche	Start-up relay	Relé consenso avviamento	58035273
23	Kontrolleuchte Parklichter	Testigos luces de posición	Feux de position	Side lights	Spia luci di posizione	58092358
24	Kontrolleuchte Richtungsanzeiger	Testigos indicadores de dirección	Feux clignotants	Indicator light	Spia indicatori di direzione	58092357
25	Verbinder Anlage zum Strassenfahren	Conector de la instalación de homologación para carretera	Connecteur installation homologation routière	Electrical connections for road vehicles	Connettore impianto omologazione stradale	Rif. COBO
26	Elektroventil Motorabstellen	Electroválvula de parada del motor	Electrovanne d'arrêt du moteur	Engine stop valve	Elettrovalvola arresto motore	Rif. Lomb.
27	Vorwärmkerze	Bujìa de calentamiento previo	Bougie de préchauffage	Heaters	Candeletta preriscaldo	Rif. Lomb.
28	Fühler Verwärmzentrale	Detector de la centralita de calentamiento previo	Senseur de la centrale préchauffage	Heater sensor management system	Sensore centralina preriscaldo	Rif. Lomb.
29	Treibstoffschwimmer	Flotador del carburante	Flotteur du carburant	Fuel float	Galleggiante carburante	58124916
30	Fühler Luftfilter verstopft	Detector del filtro del aire atascado	Senseur du filtre de l'air bouché	Air filter blocked switch	Sensore filtro aria intasato	Rif. Lomb.
31	Fühler Wassertemperatur	Detector de la temperatura del agua	Senseur de la température de l'eau	Water temperature switch	Sensore temperatura acqua	Rif. Lomb.
32	Fühler Motoröldruck	Detector de la presión del aceite del motor	Senseur de la pression de l'huile du moteur	Engine oil pressure switch	Sensore pressione olio motore	Rif. Lomb.
33	Generator	Generador	Générateur	Dynamo	Generatore	Rif. Lomb.
34	Ladungsregler	Regulador de carga	Régulateur de chargement	Voltage regulator	Regolatore di carica	58135697
35	Anlasser	Motor de arranque	Moteur de mise en marche	Starter motor	Motorino di avviamento	Rif. Lomb.
36	Batterie	Batería	Batterie	Battery	Batteria	58119799
37	Überbrückter Verbinder (MT100/104)	Conector conectado con penos en U (MT100/104)	Connecteur à crampillon (MT100/104)	Spring clip connector (MT100/104)	Connettore cavallotto (MT100/104)	Rif. COBO
38	Kupplungs – Schalter (MT100/101)	Interruptor embrague (MT100/101)	Interrupteur de débrayage (MT100/101)	Clutch switch (MT100/101)	Interruttore frizione (MT100/101)	3000638

BCS

SERIE

MA.TRA

LEGENDA PER TAVOLE S01 - S02

LEGEND FOR TABLES S01 – S02

LÈGENDE POUR LES TABLES S01 – S02

LEYENDAS POR TABLAS S01 – S02

ZEICHNERKLÄRUNG FÜR DIE PLÄNE S01 – S02

DALLA MACCHINA
DE LA MAQUINA
DE LA MACHINE
FROM THE MACHINE
AB DER MASCHINE

★ N.

760560

T01

Re 3

03/2006

Pos.	Code	Q.ty	Description	Notes
30000638	30000638	1	SWITCH	
58025479	58025479	1	SWITCH	
58035195	58035195	1	ATTACHMENT PLUG	
58035252	58035252	1	PANEL	
58035254	58035254	1	HOUR COUNTER 12-24V	
58035255	58035255	1	BUZZER	
58035256	58035256	1	WARNING LIGHT	
58035257	58035257	1	WARNING LIGHT	
58035258	58035258	1	WARNING LIGHT	
58035259	58035259	1	WARNING LIGHT	
58035260	58035260	1	WARNING LIGHT	
58035261	58035261	1	WARNING LIGHT	
58035262	58035262	1	WARNING LIGHT	
58035264	58035264	1	FUSE BOX	
58035267	58035267	1	FUSE/LOCK 20A	
58035268	58035268	1	FUSE/LOCK 80 A	
58035273	58035273	1	RELAY	
58092357	58092357	1	WARNING LIGHT	
58092358	58092358	1	WARNING LIGHT	
58119799	58119799	1	BATTERY	
58124905	58124905	1	ENGINE	
58124916	58124916	1	TANK INDICATOR	
58125855	58125855	1	SEAT	
58135697	58135697	1	REGULATOR	
58193269	58193269	1	MICROSWITCH	
59224908	59224908	1	SWITCH	
F0834378	F0834378001	1	CENTRAL PROCESSING UNIT	

Pos	BEZEICHNUNG	DENOMINACIÓN	DÉNOMINATION	DENOMINATION	DENOMINAZIONE	CODICE
1	Verbinder Maschinenanlage	Conector de la instalacion de la máquina	Connecteur installation machine	Connection to electrical system	Connettore impianto macchina	580.35195
2	Aussetzung Richtunganzeiger	Intermitencia de los indicadores de dirección	Feux clignotants intermittents	Indicator relay	Intermittenza indicatori di direzione	300.00373
3	Stop – Schalter	Interruptor parada	Interrupteur stop	Stop switch	Interruttore stop	300.00638
4	Licht hinten rechts	Faro trasero derecho	Feu posterieur dr.	Light, rear right	Fanale posteriore dx.	300.00371
5	Licht Kennzeichen	Faro de la luz de la matrícula	Feu lumiere plaque d'immatriculation	Registration plate light	Fanalino luce targa	580.35209
6	Licht hinten links	Faro trasero izquierdo	Feu posterieur gau.	Light, rear left	Fanale posteriore sx.	300.00371
7	Richtunganzeiger vorne links	Indicador de dirección delantera izquierda	Feu clignotant anterieur gau.	Front left indicator light	Indicatore di direzione sx.	300.00698
8	Scheinwerfer Lichter vorne links	Proyector de las luces delanteras izquierdo	Phares feux anterieurs gau.	Front left headlight	Proiettori luci anteriori sx.	580.35200
9	Scheinwerfer Lichter vorne links	Proyector de las luces delanteras derecho	Phares feux anterieurs dr.	Front right headlight	Proiettori luci anteriori dx.	580.35200
10	Richtunganzeiger vorne rechts	Indicador de dirección delantero derecho	Feu clignotant dr.	Front right indicator light	Indicatore di direzione anteriore dx.	300.00699
11	Ablenklichter	Commutador de luces	Commande de l'eclairage	Light deviator switch	Devioluci	592.35131
12	Akustischer Melder	Indicador acústico	Appareil de signalisation acoustique	Buzzer	Segnalatore acustico	300.00639
13	Schalter Drehlampe	Interruptor de la lámpara giratoria	Interrupteur de la lampe tournante	Flashing light switch	Interruttore lampada rotante	300.00380
14	Drehlampe	Lámpara giratoria	Lampe tournante	Flashing light	Lampada rotante	300.00379

BCS

SERIE

MA.TRA

LEGENDA PER TAVOLE S03-S04-S05

LEGEND FOR TABLES S03–S04–S05

LÈGENDE POUR TABLES S03–S04–S05

LEYENDAS PARA TABLAS S03–S04–S05

ZEICHENERKLÄRUNG FÜR DIE PLÄNE S03–S04–S05

DALLA MACCHINA
DE LA MAQUINA
DE LA MACHINE
FROM THE MACHINE
AB DER MASCHINE

N.

T02

Mod. 0

3/2000

ZENIT

Pos.	Code	Q.ty	Description	Notes
30000371	30000371	0	LAMP	
30000373	30000373	0	FLASHER	
30000379	30000379	0	ROTARY WARN. LAMP	
30000380	30000380	0	SWITCH	
30000638	30000638	0	SWITCH	
30000639	30000639	0	HORN	
30000698	30000698	0	ARROW	
30000699	30000699	0	ARROW	
58035195	58035195	0	ATTACHMENT PLUG	
58035200	58035200	0	UNIT	
58035209	58035209	0	LAMP	
59235131	59235131	0	SIGNAL SWITCH	

Pos	BEZEICHNUNG	DENOMINACIÓN	DÉNOMINATION	DENOMINATION	DENOMINAZIONE	CODICE
1	Verbinder Maschinenanlage	Conector de la instalacion de la máquina	Connecteur installation machine	Connection to electrical system	Connettore impianto macchina	58035195
2	Aussetzung Richtunganzeiger	Intermitencia de los indicadores de dirección	Feux clignotants intermittents	Indicator relay	Intermittenza indicatori di direzione	30000373
3	Stop – Schalter	Interruptor parada	Interrupteur stop	Stop switch	Interruttore stop	30000638
4	Licht hinten rechts	Faro trasero derecho	Feu posterieur dr.	Light, rear right	Fanale posteriore dx.	30000371
5	Licht Kennzeichen	Faro de la luz de la matrícula	Feu lumiere plaque d'immatriculation	Registration plate light	Fanalino luce targa	58035209
6	Licht hinten links	Faro trasero izquierdo	Feu posterieur gau.	Light, rear left	Fanale posteriore sx.	30000371
7	Richtunganzeiger vorne links	Indicador de dirección delantera izquierda	Feu clignotant anterieur gau.	Front left indicator light	Indicatore di direzione sx.	30000698
8	Scheinwerfer Lichter vorne links	Proyector de las luces delanteras izquierdo	Phares feux anterieurs gau.	Front left headlight	Proiettori luci anteriori sx.	58035200
9	Scheinwerfer Lichter vorne links	Proyector de las luces delanteras derecho	Phares feux anterieurs dr.	Front right headlight	Proiettori luci anteriori dx.	58035200
10	Richtunganzeiger vorne rechts	Indicador de dirección delantero derecho	Feu clignotant dr.	Front right indicator light	Indicatore di direzione anteriore dx.	30000699
11	Ablenklichter	Commutador de luces	Commande de l'eclairage	Light deviator switch	Devioluci	59235131
12	Akustischer Melder	Indicador acústico	Appareil de signalisation acoustique	Buzzer	Segnalatore acustico	30000639
13	Schalter Drehlampe	Interruptor de la lámpara giratoria	Interrupteur de la lampe tournante	Flashing light switch	Interruttore lampada rotante	30000380
14	Drehlampe	Lámpara giratoria	Lampe tournante	Flashing light	Lampada rotante	59295542 ★ (1)

(1) sostituisce 30000379

BCS

SERIE

MA.TRA

LEGENDA PER TAVOLE S03 - S04 - S05

LEGEND FOR TABLES S03-S04-S05

LÈGENDE POUR TABLES S03-S04-S05

LEYENDA PARA TABLAS S03-S04-S05

ZEICHNERKLÄRUNG FÜR DIE PLÄNE S03-S04-S05

DALLA MACCHINA
DE LA MAQUINA
DE LA MACHINE
FROM THE MACHINE
AB DER MASCHINE

★N.

816773

T02

Re 1

06/2008

Pos.	Code	Q.ty	Description	Notes
30000371	30000371	1	LAMP	
30000373	30000373	1	FLASHER	
30000380	30000380	1	SWITCH	
30000638	30000638	1	SWITCH	
30000639	30000639	1	HORN	
30000698	30000698	1	ARROW	
30000699	30000699	1	ARROW	
58035195	58035195	1	ATTACHMENT PLUG	
58035200	58035200	1	UNIT	
58035209	58035209	1	LAMP	
59235131	59235131	1	SIGNAL SWITCH	
59295542	59295542	1	WARNING FACILITY	



580.25979

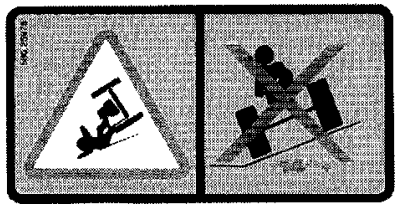

580.25978

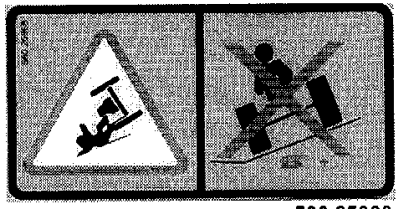

580.25968



580.25961



580.50188

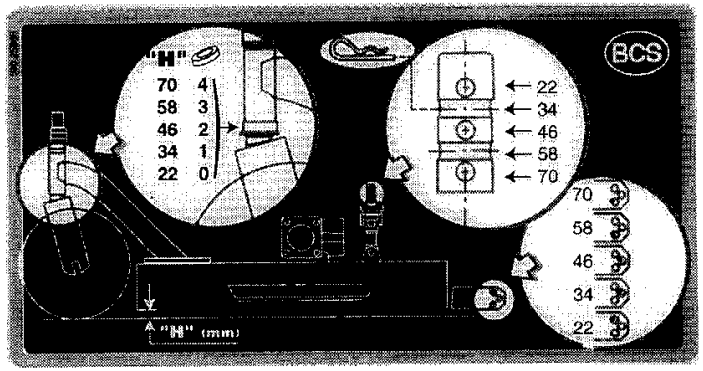

580.25966

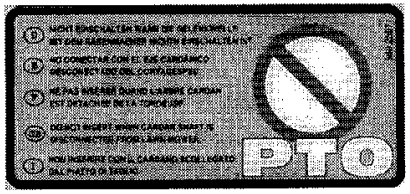

580.25971



580.25986



900.00002

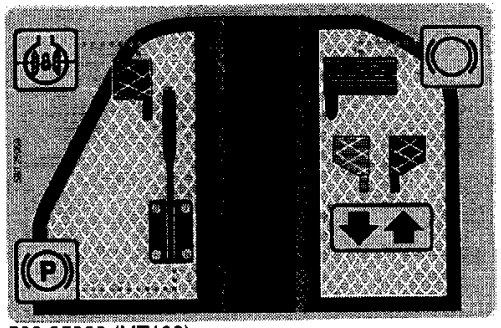

580.25969 (MT103)

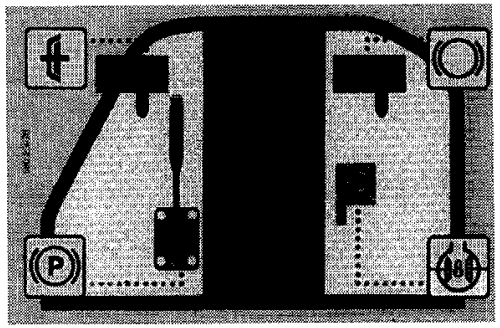

580.25970 (MT100 - MT101)

BCS	SERIE MA.TRA	ADESIVE STICKERS ADHESIVOS	AUTOCOLLANTS AUFKLEBER	DALLA MACCHINA DE LA MAQUINA DE LA MACHINE FROM THE MACHINE AB DER MASCHINE N.	PRODUZIONE 1998 PRODUCCIÓN 1998 PRODUCTION 1998 PRODUCTION 1998 PRODUKTION 1998	U01 1/1999	Mod. 0

2ENHE

Pos.	Code	Q.ty	Description	Notes
58025961	58025961	0	DECAL	
58025966	58025966	0	DECAL	
58025968	58025968	0	DECAL	
58025969	58025969	0	DECAL	
58025970	58025970	0	DECAL	
58025971	58025971	0	DECAL	
58025978	58025978	0	DECAL	
58025979	58025979	0	DECAL MATRA	
58025986	58025986	0	DECAL	
58050188	58050188	0	DECAL	
90000002	90000002	0	PLATE	

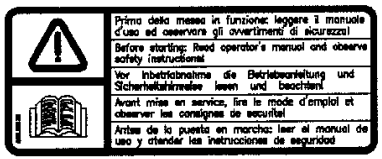

580.28130

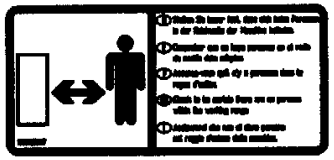

580.35617



580.25971

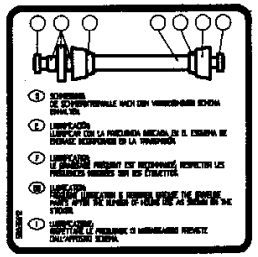

580.35612



580.25979

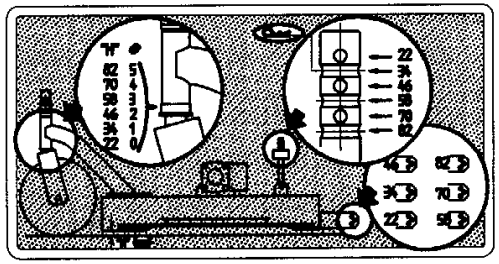

580.35078



580.35618

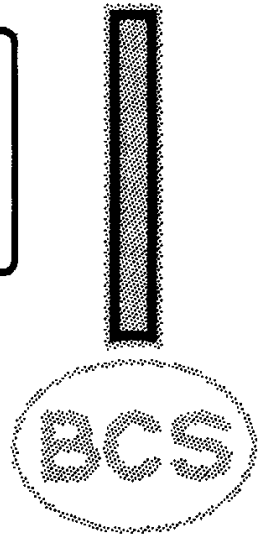



580.19959

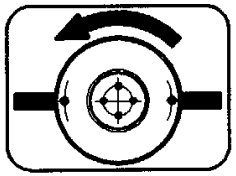

580.25972



580.25965

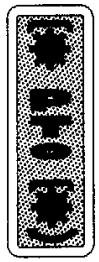

580.25967



580.46924

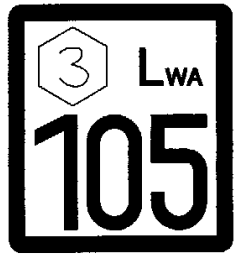

580.19958

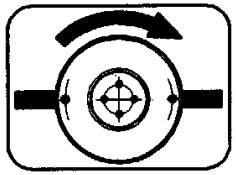

580.19957



580.35177



580.50188



580.25961

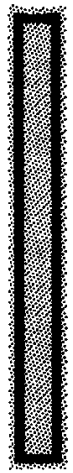

580.25986

BCS	SERIE MA.TRA	ADESIVE STICKERS / AUTOCOLLANTS ADHESIVOS / AUFKLEBER	DALLA MACCHINA DE LA MAQUINA DE LA MACHINE FROM THE MACHINE AB DER MASCHINE N.	Sostituisce U01/0 Sustituye U01/0 Remplace U01/0 Replaces U01/0 Ersätzt U01/0	U01	Mod. 1
					2/1999	

DITE - BCS

Pos.	Code	Q.ty	Description	Notes
58019957	58019957	0	DECAL	
58019958	58019958	0	DECAL	
58019959	58019959	0	DECAL	
58025961	58025961	0	DECAL	
58025965	58025965	0	DECAL	
58025967	58025967	0	DECAL	
58025971	58025971	0	DECAL	
58025972	58025972	0	INDICATOR	
58025979	58025979	0	DECAL MATRA	
58025986	58025986	0	DECAL	
58028130	58028130	0	DECAL	
58035078	58035078	0	DECAL	
58035177	58035177	0	DECAL	
58035612	58035612	0	DECAL	
58035617	58035617	0	DECAL	
58035618	58035618	0	DECAL	
58046924	58046924	0	DECAL	
58050188	58050188	0	DECAL	

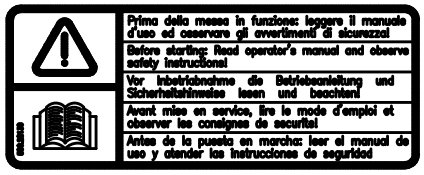

580.28130

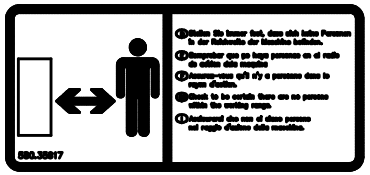

580.35617



580.25971

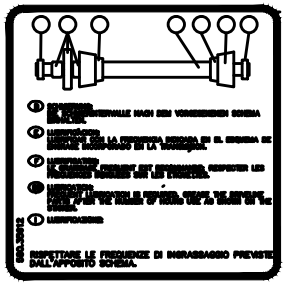

580.35612

MA.TRA
MAINTENANCE TRACTOR

580.25979

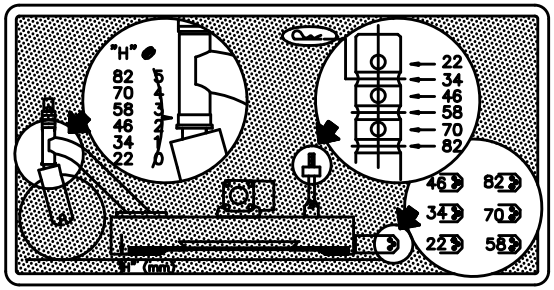

580.35078



580.35618

BCS

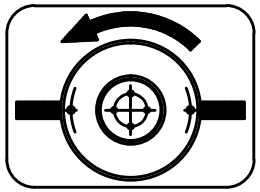

580.25972

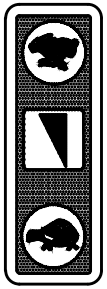

580.25965

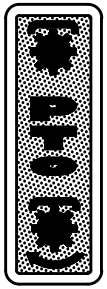

580.25967



★ 580.57769

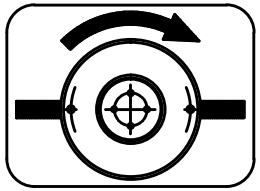

580.19957



580.35177

25



580.50188



580.25961

580.25986

BCS	SERIE MA.TRA	ADESIVE STICKERS AUTOCOLLANTS ADHESIVOS AUFKLEBER	DALLA MACCHINA DE LA MAQUINA DE LA MACHINE FROM THE MACHINE AB DER MASCHINE ★ N.	AGGIORNAMENTO APLAZAMIENTO MISE A JOUR REVISION ANPASSUNG	U01 12/200

Pos.	Code	Q.ty	Description	Notes
58019957	58019957	1	DECAL	
58025961	58025961	1	DECAL	
58025965	58025965	1	DECAL	
58025967	58025967	1	DECAL	
58025971	58025971	1	DECAL	
58025972	58025972	1	INDICATOR	
58025979	58025979	1	DECAL MATRA	
58025986	58025986	1	DECAL	
58028130	58028130	1	DECAL	
58035078	58035078	1	DECAL	
58035177	58035177	1	DECAL	
58035612	58035612	1	DECAL	
58035617	58035617	1	DECAL	
58035618	58035618	1	DECAL	
58050188	58050188	1	DECAL	
58057769	58057769	1	DECAL	

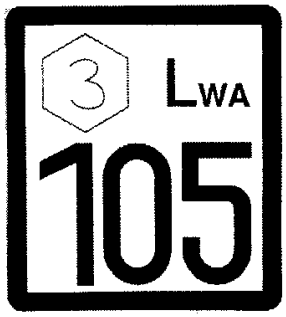

580.19958

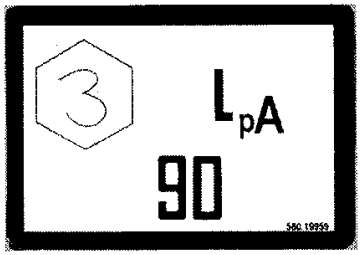

580.19959



580.46924

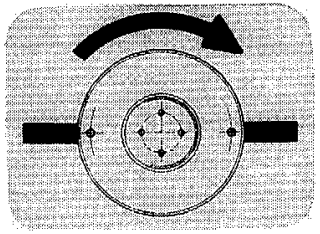

580.19957

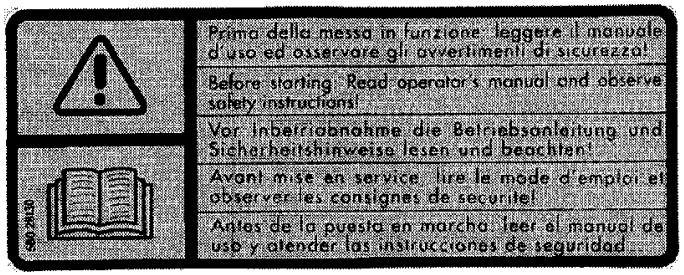

580.28130

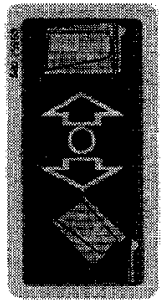

580.25963
(MT101 - MT103)

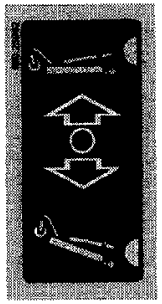

580.25962

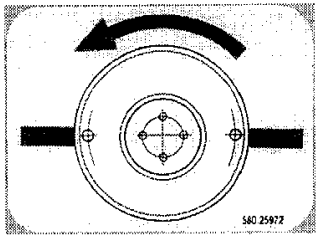

580.25972 (MT101 - MT103)

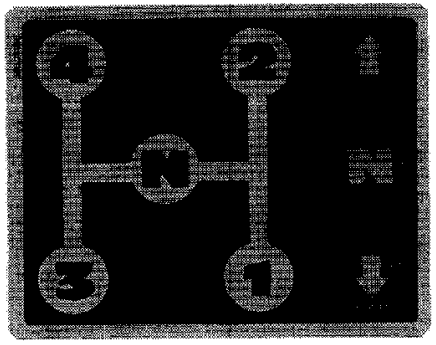

580.25960 (MT100 - MT101)

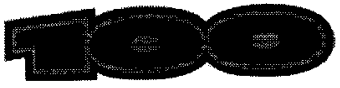

580.25983 (MT100)



580.25984 (MT101)



580.25985 (MT103)



580.25967



580.25964



580.25965

BCS	SERIE MA.TRA	ADESIVE STICKERS / AUTOCOLLANTS ADHESIVOS / AUFKLEBER	DALLA MACCHINA DE LA MAQUINA DE LA MACHINE FROM THE MACHINE AB DER MASCHINE N.	PRODUZIONE 1998 PRODUCCIÓN 1998 PRODUCTION 1998 PRODUCTION 1998 PRODUKTION 1998	U02	Mod. 0
					1/1999	

ZENNE

Pos.	Code	Q.ty	Description	Notes
58019957	58019957	0	DECAL	
58019958	58019958	0	DECAL	
58019959	58019959	0	DECAL	
58025960	58025960	0	DECAL	
58025962	58025962	0	DECAL	
58025963	58025963	0	DECAL	
58025964	58025964	0	DECAL	
58025965	58025965	0	DECAL	
58025967	58025967	0	DECAL	
58025972	58025972	0	INDICATOR	
58025983	58025983	0	DECAL MT 100	
58025984	58025984	0	ADESIVA MT 101	
58025985	58025985	0	DECAL MT 103	
58028130	58028130	0	DECAL	
58046924	58046924	0	DECAL	

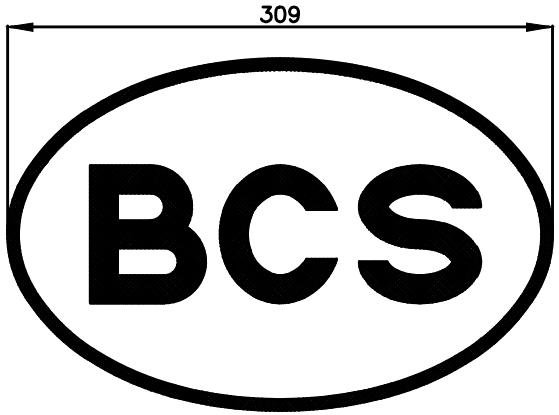

580.35093 (MT101/103/205)

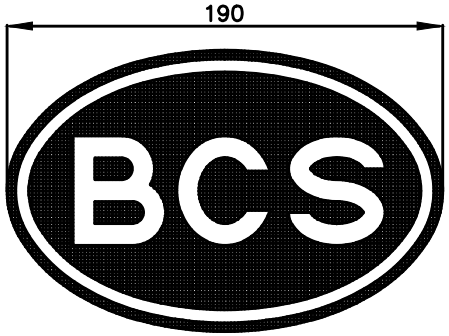

900.00002 (MT100)

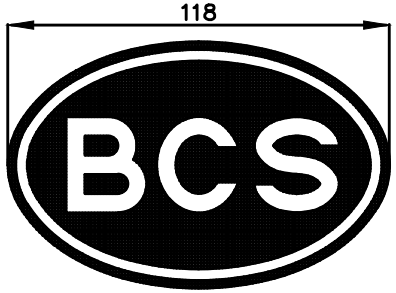

580.59211 (MT104)

100 580.25983

101 580.25984

104 580.25995

103 580.25985

205 580.35439

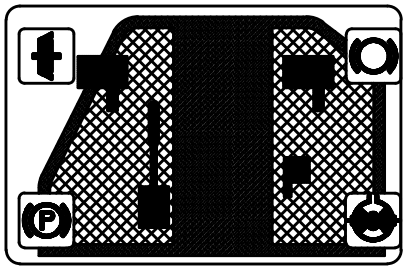

580.25970 (MT100/101)

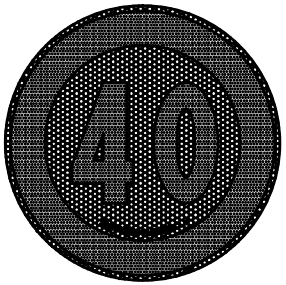

580.35196
(VEICOLI OMOLOGATI)

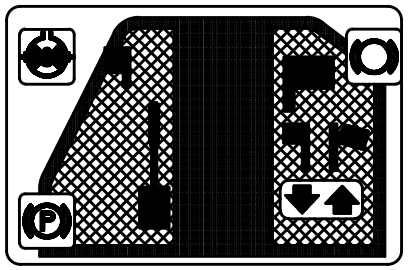

580.35310 (MT104/103/205)



580.25968 (MT101/103)



580.25978 (MT100/104/205)



580.92266 (MT104)



580.28131
(MT205)



580.25964
(MT104/103/205)

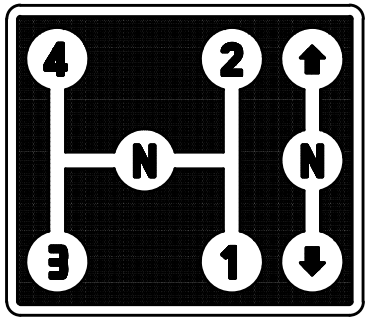

580.25960 (MT100/101)



580.25962

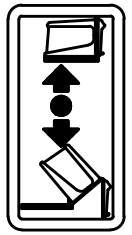

580.25963
(MT101/103)

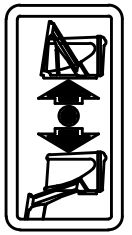

580.35438
(MT205)



580.9226
(MT104)

BCS	SERIE MA.TRA	ADESIVE STICKERS / AUTOCOLLANTS ADHESIVOS / AUFKLEBER	DALLA MACCHINA DE LA MAQUINA DE LA MACHINE FROM THE MACHINE AB DER MASCHINE	Sostituisce U02/0 Sostituye U02/0 Remplace U02/0 Replaces U02/0 Ersätzt U02/0	U02 2/1999

Pos.	Code	Q.ty	Description	Notes
58025960	58025960	0	DECAL	
58025962	58025962	0	DECAL	
58025963	58025963	0	DECAL	
58025964	58025964	0	DECAL	
58025968	58025968	0	DECAL	
58025970	58025970	0	DECAL	
58025978	58025978	0	DECAL	
58025983	58025983	0	DECAL MT 100	
58025984	58025984	0	ADESIVA MT 101	
58025985	58025985	0	DECAL MT 103	
58025995	58025995	0	DECAL	
58028131	58028131	0	DECAL	
58035093	58035093	0	DECAL	
58035196	58035196	0	SPEED LIMIT MONITORING	
58035310	58035310	0	DECAL	
58035438	58035438	0	DECAL	
58035439	58035439	0	DECAL MATRA 205	
58059211	58059211	0	DECAL BCS	
58092263	58092263	0	DECAL	
58092266	58092266	0	DECAL	
90000002	90000002	0	PLATE	

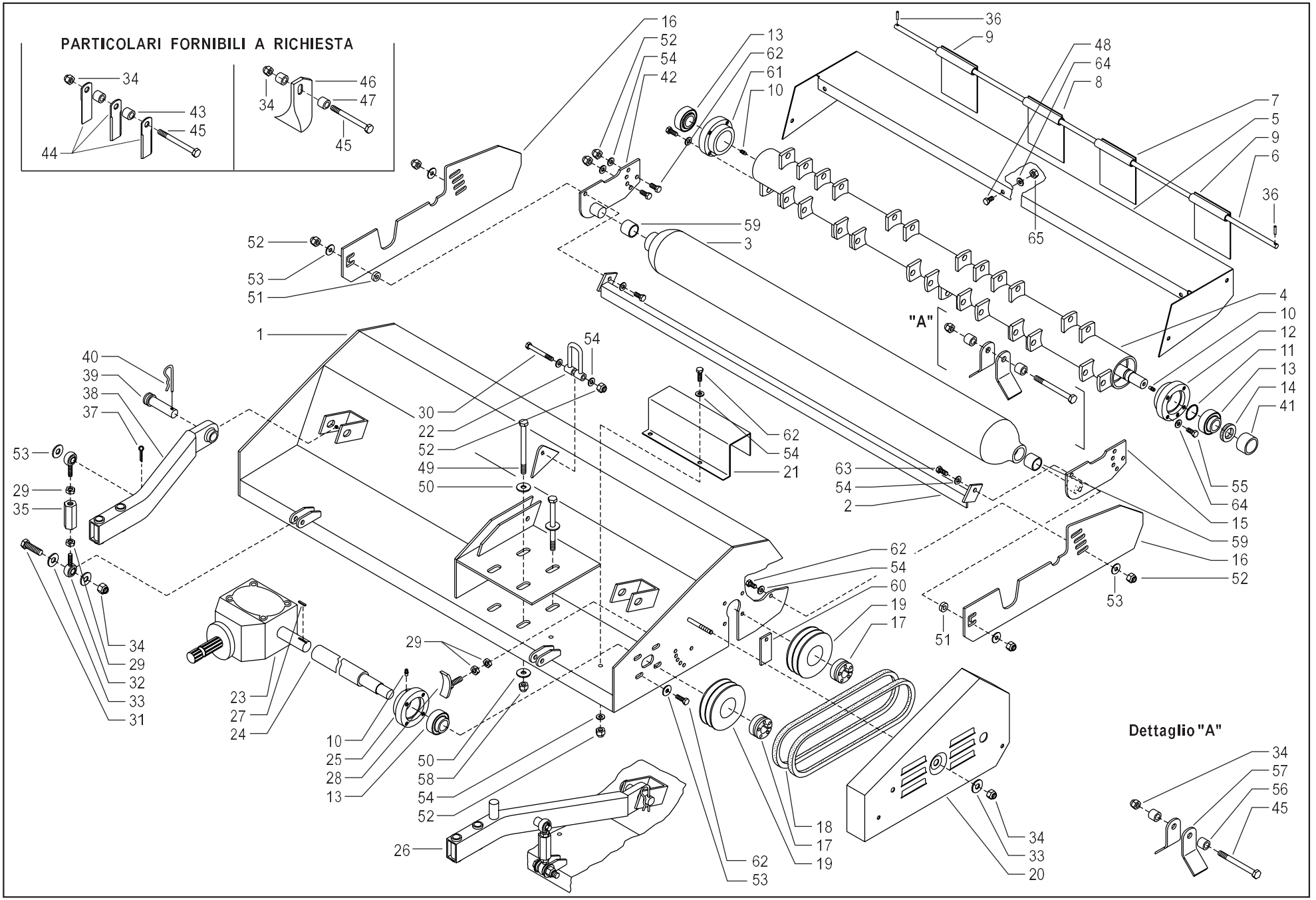
PARTICOLARI FORNIBILI A RICHIESTA
34
43
45
44
34
46
47
45
"A"
Dettaglio "A"
34
57
56
45
2ENNE V01/0

Pos.	Code	Q.ty	Description	Notes
1	59092201	1	BODYWORK	
2	59092227	1	SCRAPER	
3	59092203	1	ROLLER	
4	59092202	1	ROTOR	
5	59092209	1	FRONT DEFLECTOR	
6	56192228	1	ROD	
7	59092207	1	GRAVEL GUARD	
8	59092206	1	GRAVEL GUARD	
9	59092205	1	GRAVEL GUARD	
10	30000008	1	LUBRICATOR M6x1 CH 7	
11	38112024	1	O-RING 3081 (20,24X2,62)	
12	56192240	1	SUPPORT	
13	58192225	1	BEARING	
14	58192214	1	RING	
15	59092220	1	RH BRACKET	
16	56192219	1	SHIELD	
17	58192213	1	ATTACHMENT PLUG	
18	58192216	1	V BELT	
19	58192212	1	PULLEY	
20	59092217	1	SUMP	
21	56192204	1	SUMP	
22	59092223	1	BRACKET	
23	59292210	1	REDUCTION BOX	
24	56192211	1	SHAFT	
25	56192241	1	SUPPORT	
26	59092208	1	RIGHT ARM	
27	58192229	1	KEY	
28	59092226	1	ASSEMBLY	
29	31211100	1	NUT M10	
30	31112158	1	SCREW TE M8X70 UNI 5737 8G	
31	31112263	1	SCREW TE M12X45 UNI 5739	
32	58192222	1	TERMINAL	
33	31411130	1	WASHER 13x24	
34	31241120	1	SELFLOCK NUT M12	

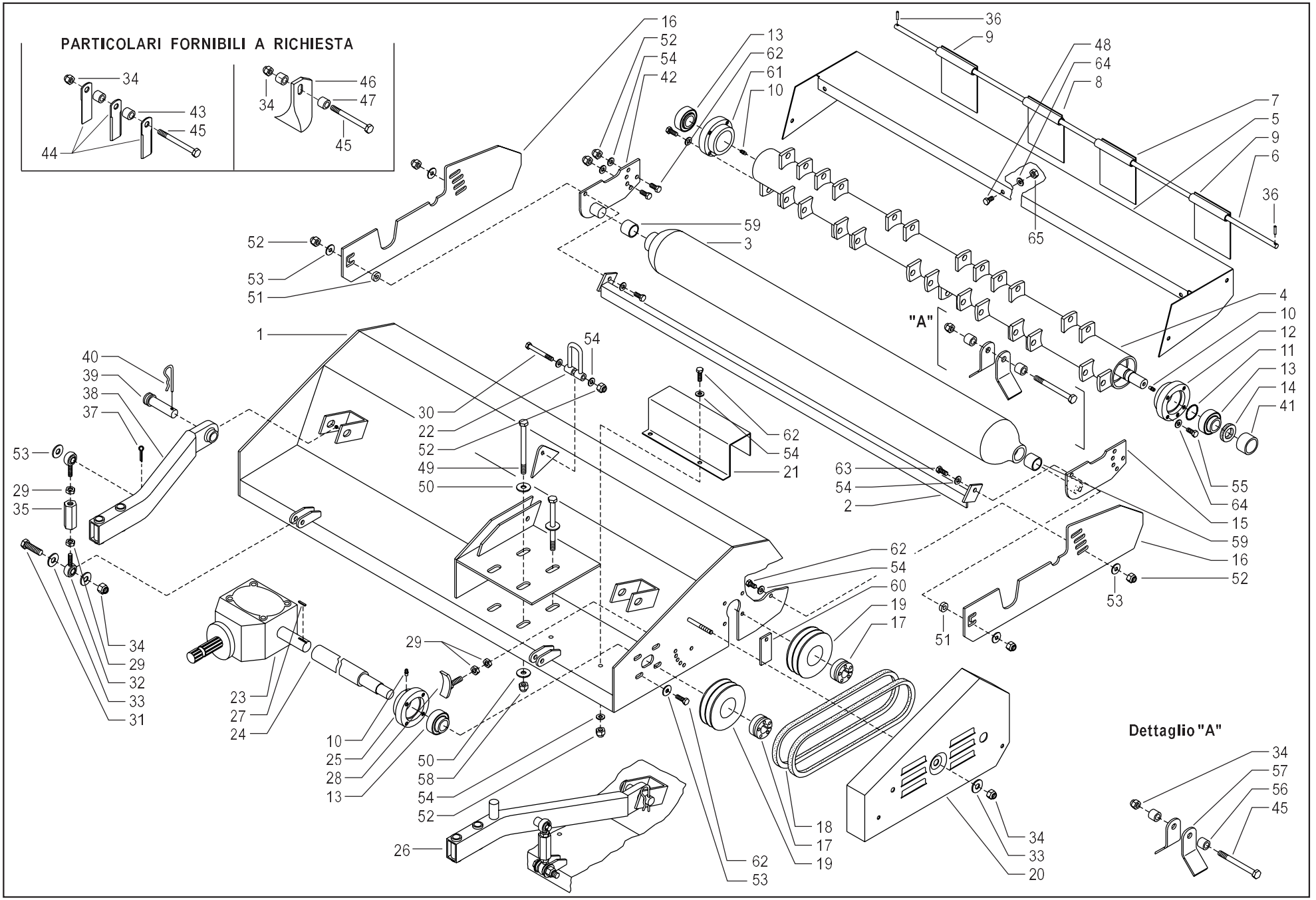
PARTICOLARI FORNIBILI A RICHIESTA
34
43
45
44
34
46
47
45
"A"
Dettaglio "A"
34
57
56
45
2ENNE V01/0

Pos.	Code	Q.ty	Description	Notes
35	56192221	1	TENSIONER	
36	34211040	1	ROLL PIN	
37	34110031	1	SPLIT PIN A3X30 UNI 1336	
38	59092238	1	ARM	
39	56192243	1	PIN	
40	58092248	1	SPILLO D.4 SXS04.000000	
41	56192215	1	SEALING BUSH	
42	59092239	1	LEFT BRACKET	
43	56192236	1	SPACER	
44	56192235	1	KNIFE	
45	31112293	1	SCREW TE M12X80 UNI 5737	
46	56192233	1	VANE	
47	56192234	1	SPACER	
48	31111151	1	SCREW TE M8X16 UNI 5739 8G	
49	31112224	1	SCREW TE M10X130 UNI 5737	
50	56192244	1	WASHER	
51	56192237	1	SPACER	
52	31241080	1	HEXAGON SELFLOCK NUT M8	
53	31411090	1	WASHER 9x24	
54	31411084	1	WASHER 8,4x17	
55	31112150	1	SCREW TE M8X20 UNI 5739 8G	
56	56192231	1	SPACER	
57	56192230	1	KNIFE	
58	31241100	1	SELFLOCK HEXAGON NUT M10	
59	58192224	1	REINFORCING SLEEVE	
60	56192232	1	SMALL PLATE	
61	56192218	1	SUPPORT	
62	31112151	1	SCREW TE M8X25 UNI 5739 8G	
63	31112153	1	SCREW TE M8X35 UNI 5739 8G	
64	31424084	1	SPRING WASHER 8,4	
65	31211080	1	NUT M8	

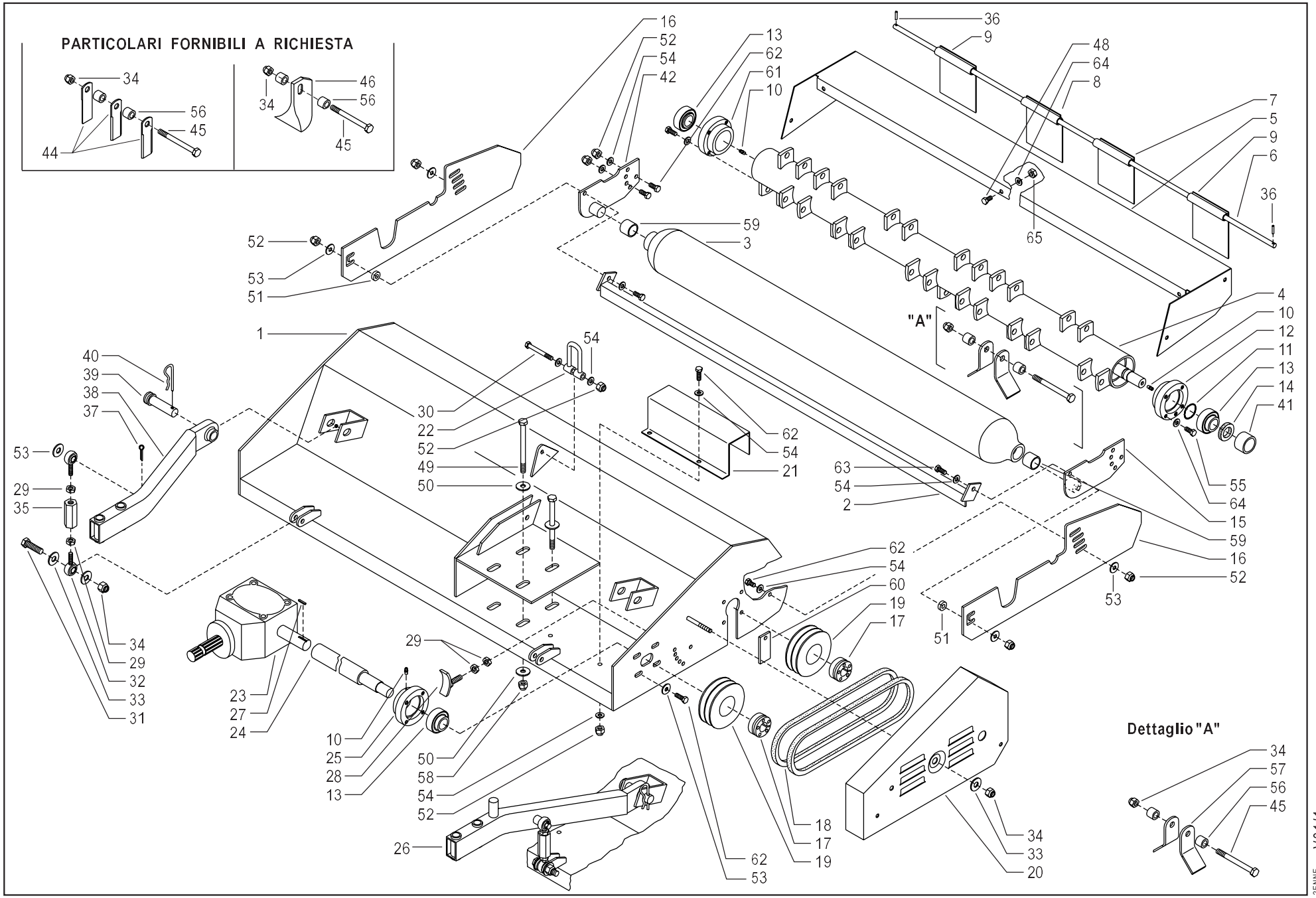
PARTICOLARI FORNIBILI A RICHIESTA
Dettaglio "A"
"A"
2ENNE V01/1

Pos.	Code	Q.ty	Description	Notes
1	59092201	1	BODYWORK	
2	59092227	1	SCRAPER	
3	59092203	1	ROLLER	
4	59092202	1	ROTOR	
5	59092209	1	FRONT DEFLECTOR	
6	56192228	1	ROD	
7	59092207	1	GRAVEL GUARD	
8	59092206	1	GRAVEL GUARD	
9	59092205	1	GRAVEL GUARD	
10	30000008	1	LUBRICATOR M6x1 CH 7	
11	38112024	1	O-RING 3081 (20,24X2,62)	
12	56192240	1	SUPPORT	
13	58192225	1	BEARING	
14	58192214	1	RING	
15	59092220	1	RH BRACKET	
16	56192219	1	SHIELD	
17	58192213	1	ATTACHMENT PLUG	
18	58192216	1	V BELT	
19	58192212	1	PULLEY	
20	59092217	1	SUMP	
21	56192204	1	SUMP	
22	59092223	1	BRACKET	
23	59292210	1	REDUCTION BOX	
24	56192211	1	SHAFT	
25	56192241	1	SUPPORT	
26	59092208	1	RIGHT ARM	
27	58192229	1	KEY	
28	59092226	1	ASSEMBLY	
29	31211100	1	NUT M10	
30	31112158	1	SCREW TE M8X70 UNI 5737 8G	
31	31112263	1	SCREW TE M12X45 UNI 5739	
32	58192222	1	TERMINAL	
33	31411130	1	WASHER 13x24	
34	31241120	1	SELFLOCK NUT M12	

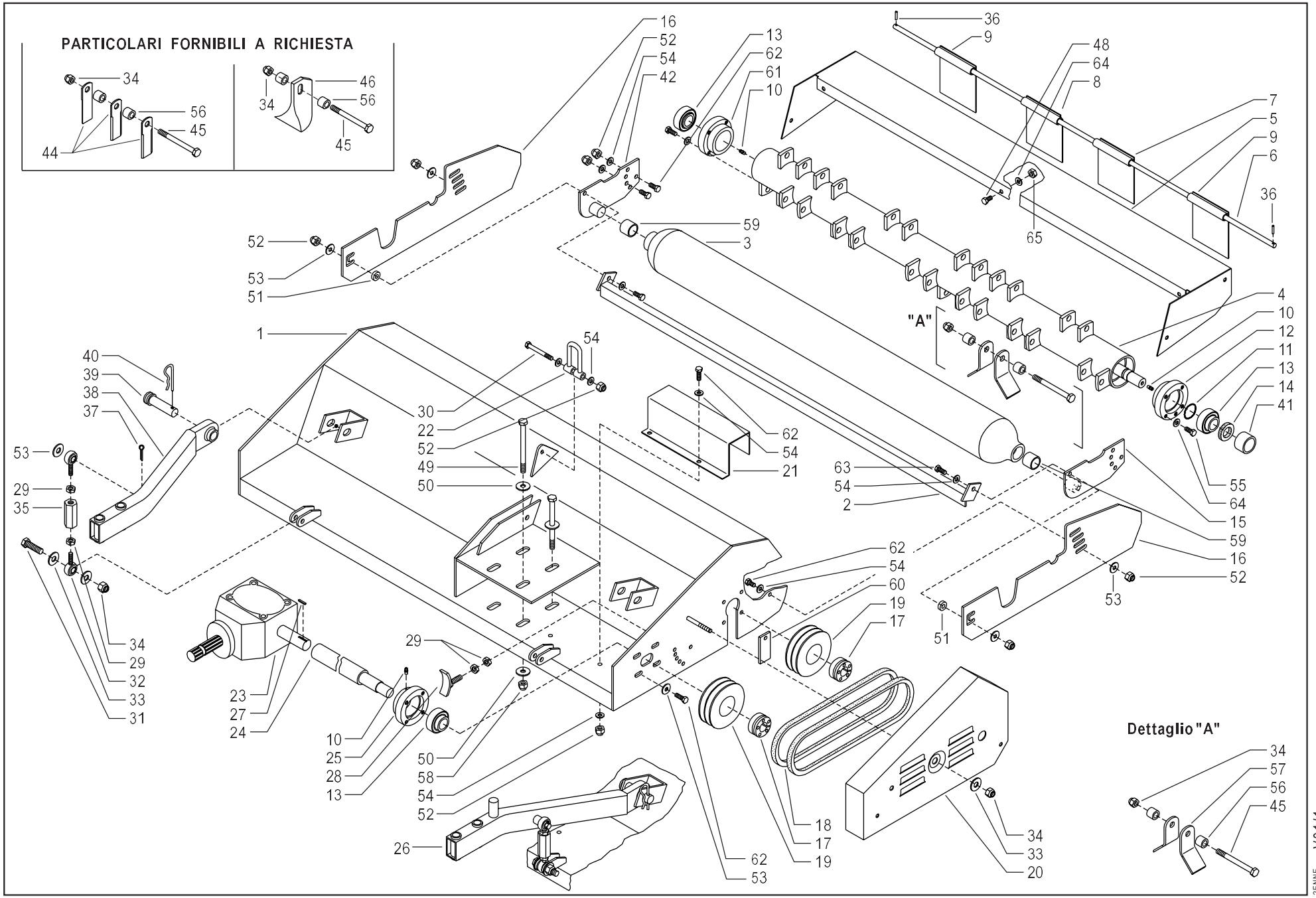
PARTICOLARI FORNIBILI A RICHIESTA
34
56
45
44
34
46
56
45
Dettaglio "A"
"A"
2ENNE V01/1

Pos.	Code	Q.ty	Description	Notes
35	56192221	1	TENSIONER	
36	34211040	1	ROLL PIN	
37	34110031	1	SPLIT PIN A3X30 UNI 1336	
38	59092238	1	ARM	
39	56192243	1	PIN	
40	58092248	1	SPILLO D.4 SXS04.000000	
41	56192215	1	SEALING BUSH	
42	59092239	1	LEFT BRACKET	
44	56192235	1	KNIFE	
45	31112293	1	SCREW TE M12X80 UNI 5737	
46	56192233	1	VANE	
48	31111151	1	SCREW TE M8X16 UNI 5739 8G	
49	31112224	1	SCREW TE M10X130 UNI 5737	
50	56192244	1	WASHER	
51	56192237	1	SPACER	
52	31241080	1	HEXAGON SELFLOCK NUT M8	
53	31411090	1	WASHER 9x24	
54	31411084	1	WASHER 8,4x17	
55	31112150	1	SCREW TE M8X20 UNI 5739 8G	
56	56192231	1	SPACER	
57	56192230	1	KNIFE	
58	31241100	1	SELFLOCK HEXAGON NUT M10	
59	58192224	1	REINFORCING SLEEVE	
60	56192232	1	SMALL PLATE	
61	56192218	1	SUPPORT	
62	31112151	1	SCREW TE M8X25 UNI 5739 8G	
63	31112153	1	SCREW TE M8X35 UNI 5739 8G	
64	31424084	1	SPRING WASHER 8,4	
65	31211080	1	NUT M8	

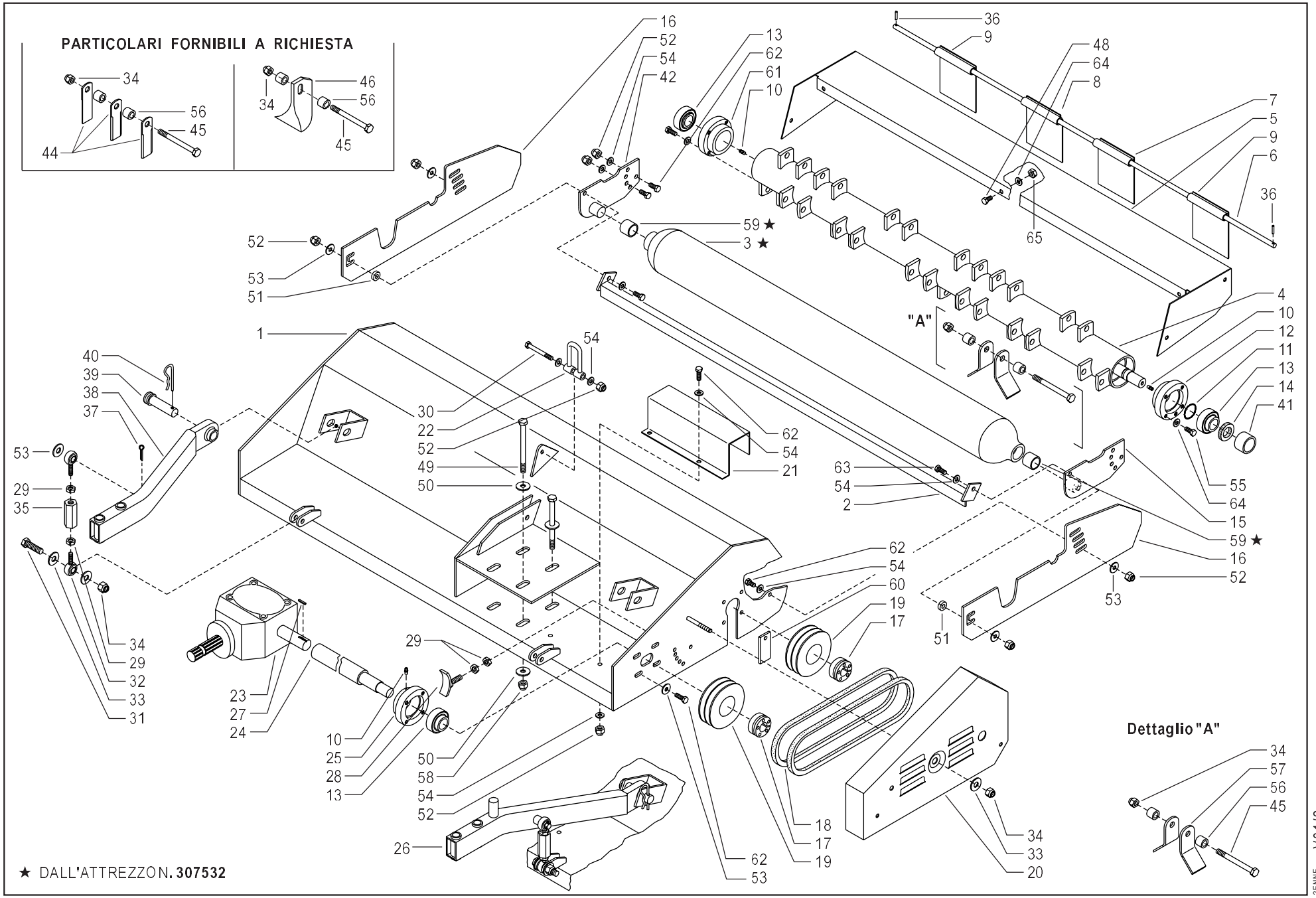
PARTICOLARI FORNIBILI A RICHIESTA
Dettaglio "A"
"A"
★ DALL'ATTREZZON. 307532
2ENNE V01/2

Pos.	Code	Q.ty	Description	Notes
1	59092201	1	BODYWORK	
2	59092227	1	SCRAPER	
3	59093486	1	ROLLER	
4	59092202	1	ROTOR	
5	59092209	1	FRONT DEFLECTOR	
6	56192228	1	ROD	
7	59092207	1	GRAVEL GUARD	
8	59092206	1	GRAVEL GUARD	
9	59092205	1	GRAVEL GUARD	
10	30000008	1	LUBRICATOR M6x1 CH 7	
11	38112024	1	O-RING 3081 (20,24X2,62)	
12	56192240	1	SUPPORT	
13	58192225	1	BEARING	
14	58192214	1	RING	
15	59092220	1	RH BRACKET	
16	56192219	1	SHIELD	
17	58192213	1	ATTACHMENT PLUG	
18	58192216	1	V BELT	
19	58192212	1	PULLEY	
20	59092217	1	SUMP	
21	56192204	1	SUMP	
22	59092223	1	BRACKET	
23	59292210	1	REDUCTION BOX	
24	56192211	1	SHAFT	
25	56192241	1	SUPPORT	
26	59092208	1	RIGHT ARM	
27	58192229	1	KEY	
28	59092226	1	ASSEMBLY	
29	31211100	1	NUT M10	
30	31112158	1	SCREW TE M8X70 UNI 5737 8G	
31	31112263	1	SCREW TE M12X45 UNI 5739	
32	58192222	1	TERMINAL	
33	31411130	1	WASHER 13x24	
34	31241120	1	SELFLOCK NUT M12	

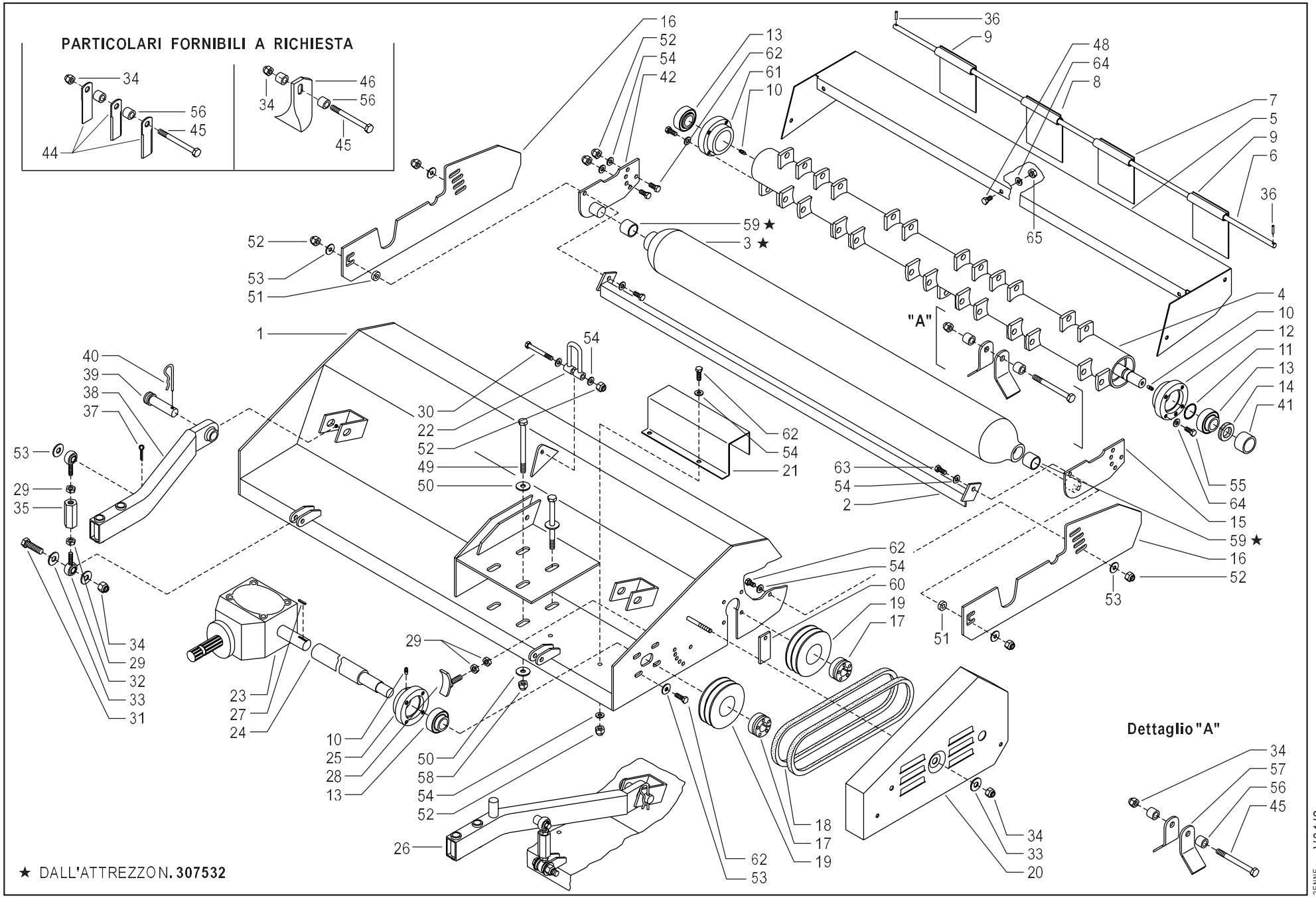
PARTICOLARI FORNIBILI A RICHIESTA
34
56
45
44
46
34
56
45
Dettaglio "A"
★ DALL'ATTREZZON. 307532
2ENNE V01/2

Pos.	Code	Q.ty	Description	Notes
35	56192221	1	TENSIONER	
36	34211040	1	ROLL PIN	
37	34110031	1	SPLIT PIN A3X30 UNI 1336	
38	59092238	1	ARM	
39	56192243	1	PIN	
40	58092248	1	SPILLO D.4 SXS04.000000	
41	56192215	1	SEALING BUSH	
42	59092239	1	LEFT BRACKET	
44	56192235	1	KNIFE	
45	31112293	1	SCREW TE M12X80 UNI 5737	
46	56192233	1	VANE	
48	31111151	1	SCREW TE M8X16 UNI 5739 8G	
49	31112224	1	SCREW TE M10X130 UNI 5737	
50	56192244	1	WASHER	
51	56192237	1	SPACER	
52	31241080	1	HEXAGON SELFLOCK NUT M8	
53	31411090	1	WASHER 9x24	
54	31411084	1	WASHER 8,4x17	
55	31112150	1	SCREW TE M8X20 UNI 5739 8G	
56	56192231	1	SPACER	
57	56192230	1	KNIFE	
58	31241100	1	SELFLOCK HEXAGON NUT M10	
59	55293485	1	BUSHING NYLON	
60	56192232	1	SMALL PLATE	
61	56192218	1	SUPPORT	
62	31112151	1	SCREW TE M8X25 UNI 5739 8G	
63	31112153	1	SCREW TE M8X35 UNI 5739 8G	
64	31424084	1	SPRING WASHER 8,4	
65	31211080	1	NUT M8	

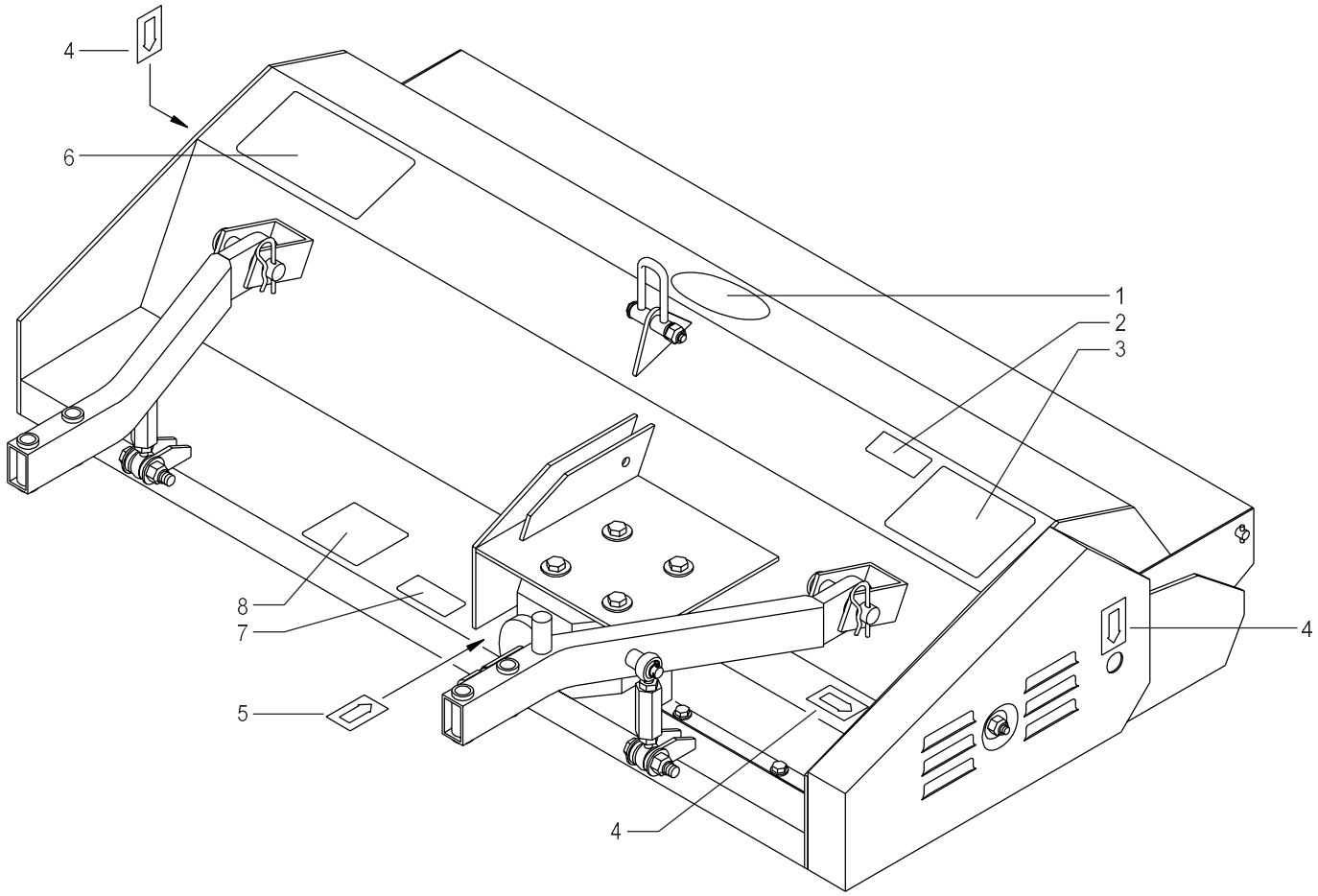
4
6
1
2
3
8
7
4
5
4

Pos.	Code	Q.ty	Description	Notes
1	58059211	1	DECAL BCS	
2	58035649	1	ADESIVA PRODOTTO BCS	
3	58092242	1	ADES.MANU.CINGHIA BC0GT.121100	
4	58092245	1	ADES.PUNTI INGRAS.BC5GT.653000	
5	58092246	1	ADES.CONTR.L.OLIO BC5GT.651000	
6	58092247	1	ADES.DI SICUREZZA BCGTT.801000	
7	58035618	1	DECAL	
8	58035612	1	DECAL	

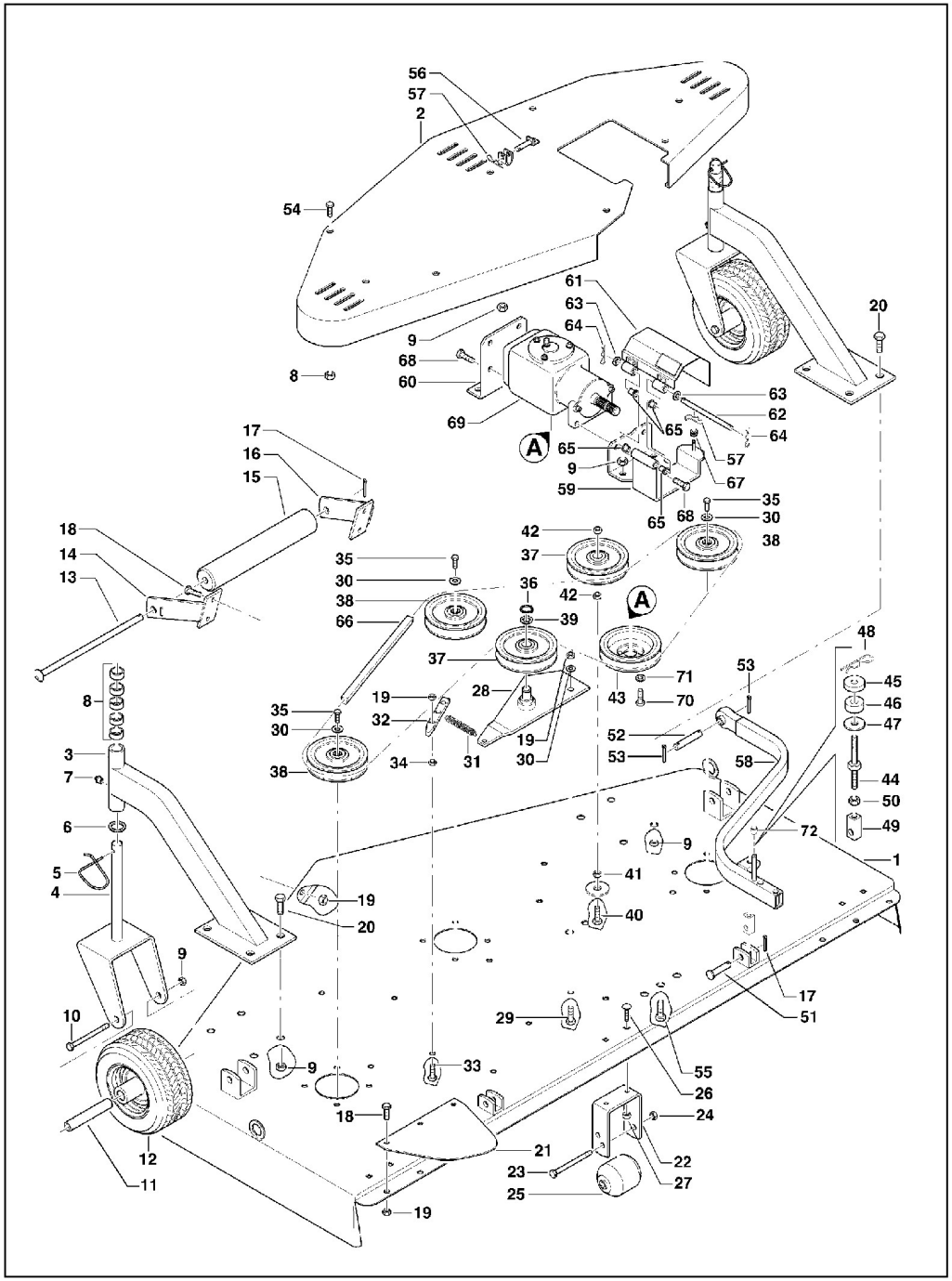

PIATTO DI TAGLIO

Pos.	Code	Q.ty	Description	Notes
1	59035900	1	TELAIO V.150 0215510	
2	59035915	1	SHEET	
3	59035922	1	ARM	
4	59035923	1	FORK	
5	58135929	1	SPRING	
6	58135908	1	RING	
7	30000001	1	LUBRICATOR M10	
8	56135924	1	WASHER	
9	31241143	1	SELFLOCK NUT M14	
10	31112339	1	SCREW TE M14X140 UNI 5737	
11	56135926	1	SPACER	
12	59235925	1	WHEEL	
13	56135920	1	PERNO RULLO 0067363	
14	59035919	1	SUPPORT	
15	57335921	1	ROLLER	
16	59035918	1	SUPPORT	
17	34110041	1	SPLIT PIN A4X25 UNI 1336	
18	31112210	1	SCREW TE M10X20 UNI 5739	
19	31241105	1	SELFLOCK NUT M10	
20	31112328	1	SCREW TE M14X35 UNI 5739	
21	56135931	1	REAR PROTECTION	
22	56135916	1	CONNECTION	
23	31112703	1	SCREW TE M12X120 UNI 5737	
24	31241126	1	SELFLOCK NUT M12	
25	58135917	1	ROLLER	
26	31121801	1	SCREW TTQ M8X20 UNI 5731	
27	31241085	1	SELFLOCK NUT M8 6S	
28	59035912	1	SUPPORT	
29	31112219	1	SCREW TE M10X25 UNI 5739	
30	58135930	1	WASHER 10,5x30/2,5	
31	58035914	1	SPRING	
32	56135913	1	PLATE 0008571	
33	31112211	1	SCREW TE M10X30 UNI 5739	
34	F0814647000	1	NUT M10	

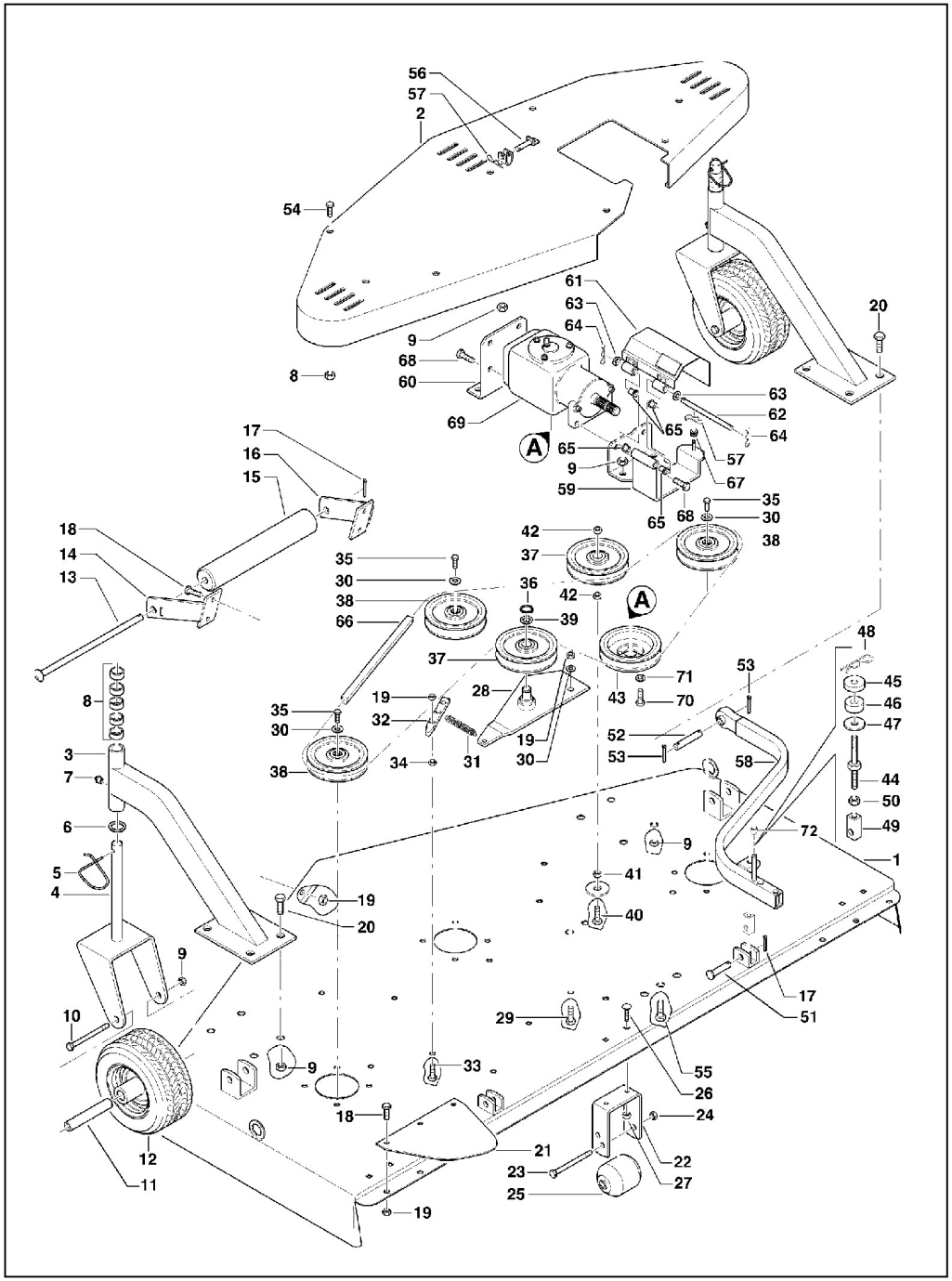

PIATTO DI TAGLIO

Pos.	Code	Q.ty	Description	Notes
35	31112900	1	SCREW TE M10X1,25X20 UNI5740	
36	35121020	1	SEEGER RING E 20 DIN 471	
37	58135911	1	PULLEY	
38	56335903	1	PULLEY	
39	58135933	1	RONDELLA 21,0x36/2,5 0046555	
40	31112605	1	VITE TE M20X55 UNI 5739 8G	
41	31211200	1	NUT M20	
42	31231183	1	NUT M20	
43	51135722	1	PULLEY	
44	56135010	1	PIN	
45	56535219	1	CUP	
46	57324272	1	STOPPER	
47	56124273	1	CUP	
48	58035199	1	PIN	
49	56335011	1	TERMINAL	
50	31211120	1	NUT M12 UNI 5588 6S	
51	56324274	1	PIN	
52	56335218	1	CONNECTING BOLT	
53	34110045	1	SPLIT PIN A4X45 UNI 1336	
54	31112217	1	SCREW TE M10X80 UNI 5737	
55	31111330	1	SCREW TE M14X30 UNI 5739 8G	
56	59024888	1	PIN	
57	58050533	1	PIN	
58	59035927	1	RIGHT ARM	
58	59035928	1	LEFT ARM	
59	59035901	1	FRONT SUPPORT	
60	56135902	1	SUPPORT	
61	59035870	1	COMPLETE COVER	
62	56157539	1	PIN	
63	31411104	1	WASHER 10,5x18	
64	34110030	1	SPLIT PIN A3X20 UNI 1336	
65	55142109	1	BUSHING	
66	58135910	1	V BELT	
67	30000645	1	CABLE GLAND 80/110/15	

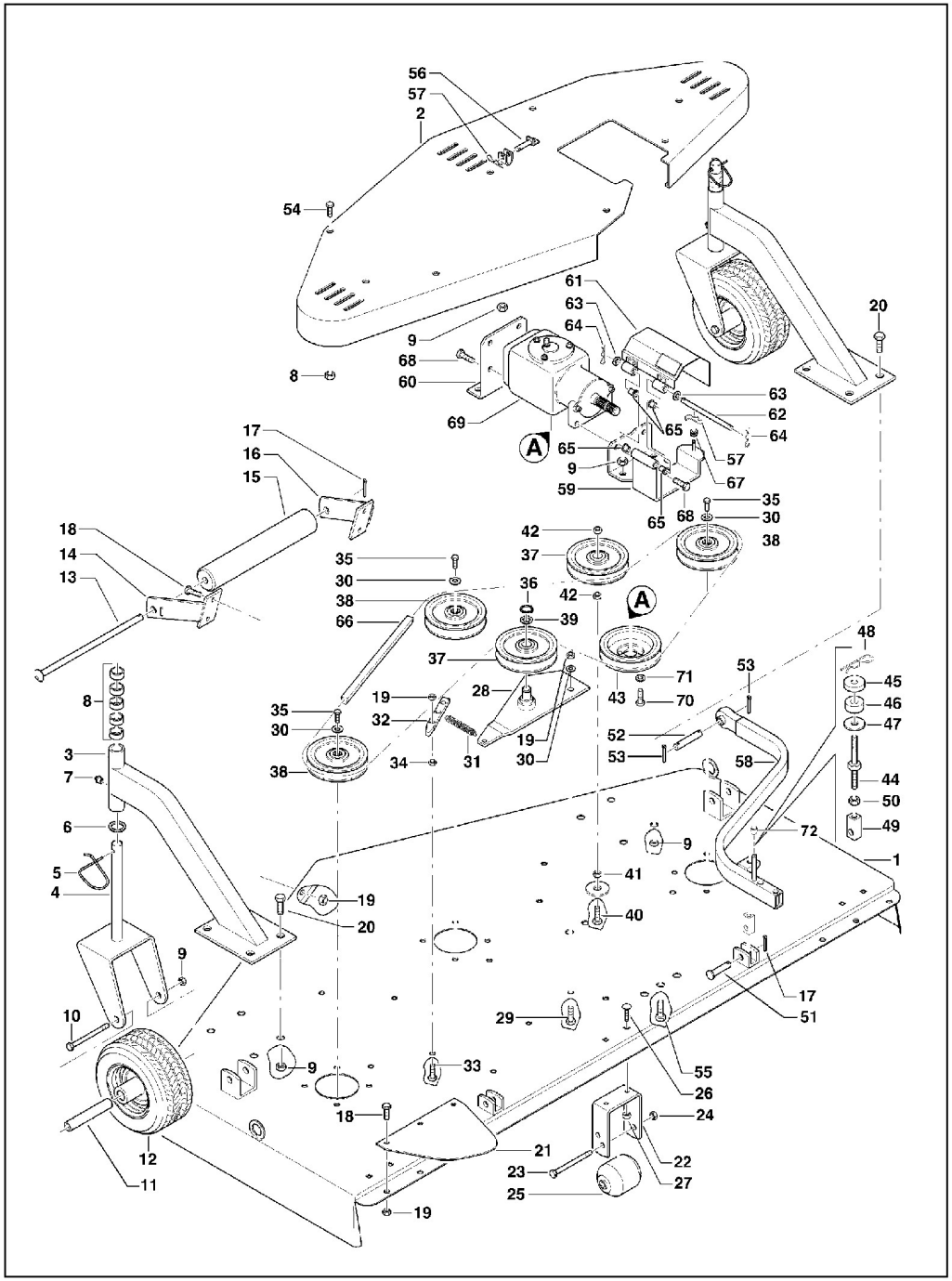

PIATTO DI TAGLIO

Pos.	Code	Q.ty	Description	Notes
68	31112271	1	SCREW TE M12X25 UNI 5739	
69	59235719	1	MATRA BLADE CONTROL BOX	
70	31112150	1	SCREW TE M8X20 UNI 5739 8G	
71	31421083	1	WASHER	
72	58192002	1	GUARD	

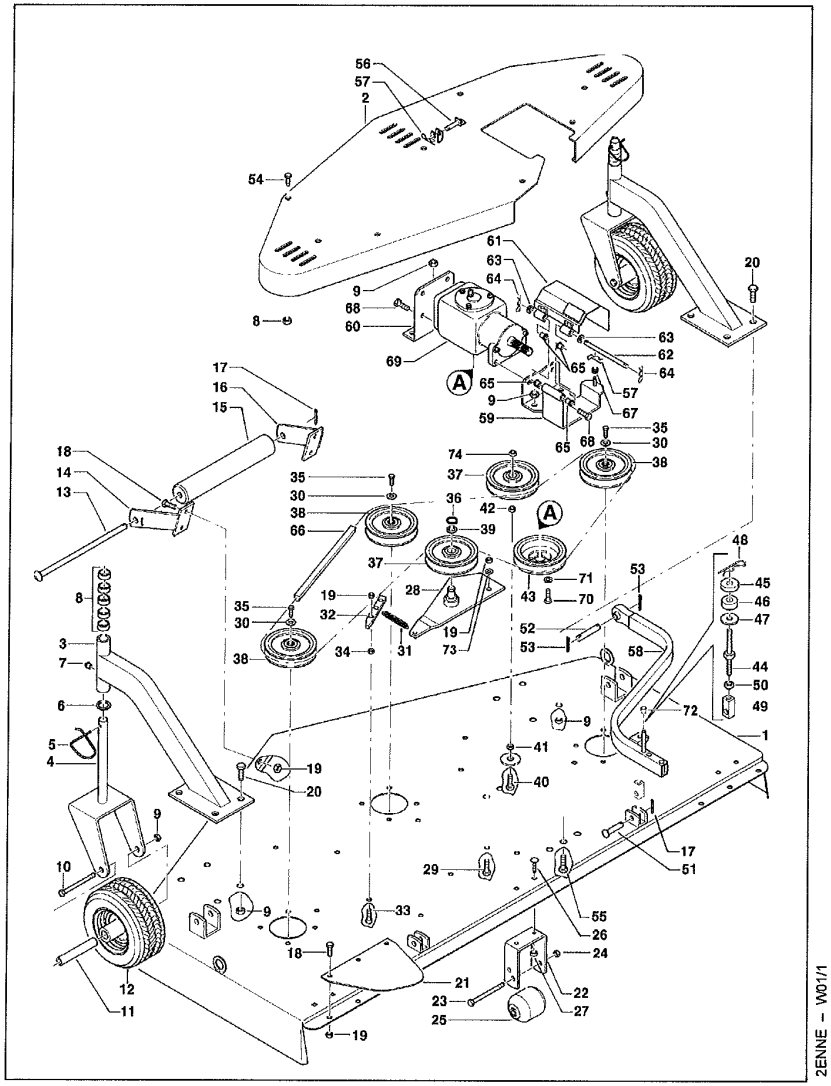

2ENNE – W01/1

PIATTO DI TAGLIO

DALLA MACCHINA
DE LA MAQUINA
DE LA MACHINE
FROM THE MACHINE
AB DER MASCHINE

N. 77103

Pos.	Code	Q.ty	Description	Notes
1	59035900	1	TELAIO V.150 0215510	
2	59092106	1	SHEET	
3	59035922	1	ARM	
4	59035923	1	FORK	
5	58135929	1	SPRING	
6	58135908	1	RING	
7	30000001	1	LUBRICATOR M10	
8	56135924	1	WASHER	
9	31241143	1	SELFLOCK NUT M14	
10	31112339	1	SCREW TE M14X140 UNI 5737	
11	56135926	1	SPACER	
12	59235925	1	WHEEL	
13	56135920	1	PERNO RULLO 0067363	
14	59035919	1	SUPPORT	
15	57335921	1	ROLLER	
16	59035918	1	SUPPORT	
17	34110041	1	SPLIT PIN A4X25 UNI 1336	
18	31112210	1	SCREW TE M10X20 UNI 5739	
19	31241105	1	SELFLOCK NUT M10	
20	31112328	1	SCREW TE M14X35 UNI 5739	
21	56135931	1	REAR PROTECTION	
22	56135916	1	CONNECTION	
23	31112703	1	SCREW TE M12X120 UNI 5737	
24	31241126	1	SELFLOCK NUT M12	
25	58135917	1	ROLLER	
26	31121801	1	SCREW TTQ M8X20 UNI 5731	
27	31241085	1	SELFLOCK NUT M8 6S	
28	59035912	1	SUPPORT	
29	31112219	1	SCREW TE M10X25 UNI 5739	
30	31411210	1	WASHER 21x37	
31	58035914	1	SPRING	
32	56135913	1	PLATE 0008571	
33	31112211	1	SCREW TE M10X30 UNI 5739	
34	F0814647000	1	NUT M10	

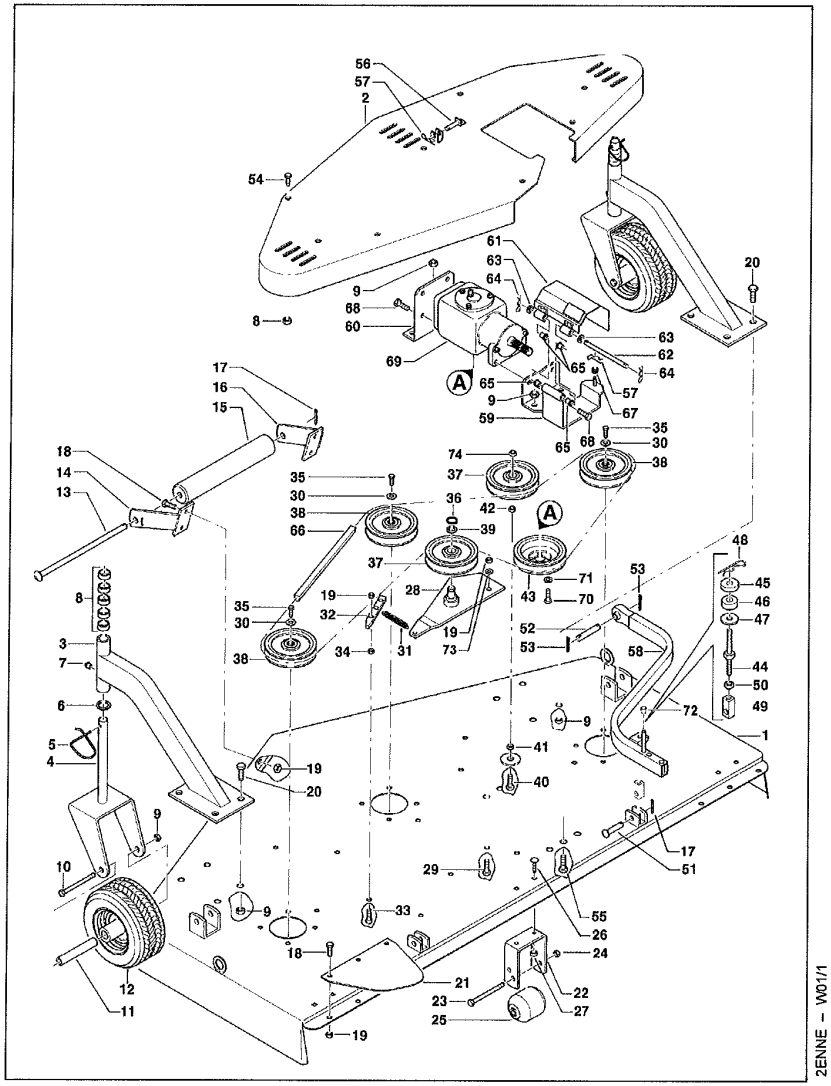

2ENNE – W01/1

PIATTO DI TAGLIO

DALLA MACCHINA
DE LA MAQUINA
DE LA MACHINE
FROM THE MACHINE
AB DER MASCHINE

N. 77103

Pos.	Code	Q.ty	Description	Notes
35	31241185	1	SELFLOCK NUT M20X1,5	
36	35121020	1	SEEGER RING E 20 DIN 471	
37	58135911	1	PULLEY	
38	56335903	1	PULLEY	
39	58135933	1	RONDELLA 21,0x36/2,5 0046555	
40	31112507	1	VITE TE M20X70 UNI 5739 8G	
41	31211200	1	NUT M20	
42	31231183	1	NUT M20	
43	51135722	1	PULLEY	
44	56135010	1	PIN	
45	56535219	1	CUP	
46	57324272	1	STOPPER	
47	56124273	1	CUP	
48	58035199	1	PIN	
49	56335011	1	TERMINAL	
50	31211120	1	NUT M12 UNI 5588 6S	
51	56324274	1	PIN	
52	56335218	1	CONNECTING BOLT	
53	34110045	1	SPLIT PIN A4X45 UNI 1336	
54	31111225	1	SCREW TE M10X90 UNI 5737 8G	
55	31111330	1	SCREW TE M14X30 UNI 5739 8G	
56	59024888	1	PIN	
57	58050533	1	PIN	
58	59035928	1	LEFT ARM	
58	59092109	1	RIGHT ARM	
59	59035901	1	FRONT SUPPORT	
60	56135902	1	SUPPORT	
61	59092107	1	COMPLETE COVER	
62	56157539	1	PIN	
63	31411104	1	WASHER 10,5x18	
64	34110030	1	SPLIT PIN A3X20 UNI 1336	
65	55142109	1	BUSHING	
66	58135910	1	V BELT	
67	30000645	1	CABLE GLAND 80/110/15	

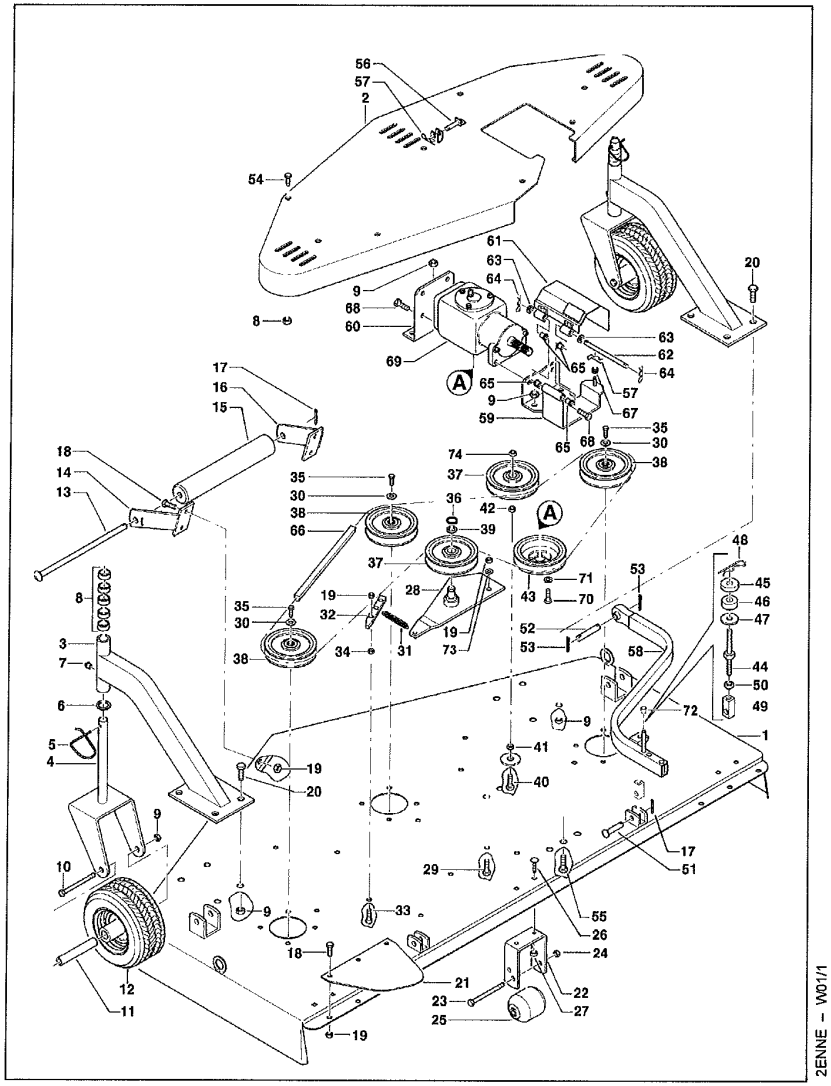

2ENNE – W01/1

PIATTO DI TAGLIO

DALLA MACCHINA
DE LA MAQUINA
DE LA MACHINE
FROM THE MACHINE
AB DER MASCHINE

N. 77103

Pos.	Code	Q.ty	Description	Notes
68	31112271	1	SCREW TE M12X25 UNI 5739	
69	59235719	1	MATRA BLADE CONTROL BOX	
70	31112150	1	SCREW TE M8X20 UNI 5739 8G	
71	31421083	1	WASHER	
72	58192002	1	GUARD	
73	58135930	1	WASHER 10,5x30/2,5	
74	31241190	1	NUT M20	

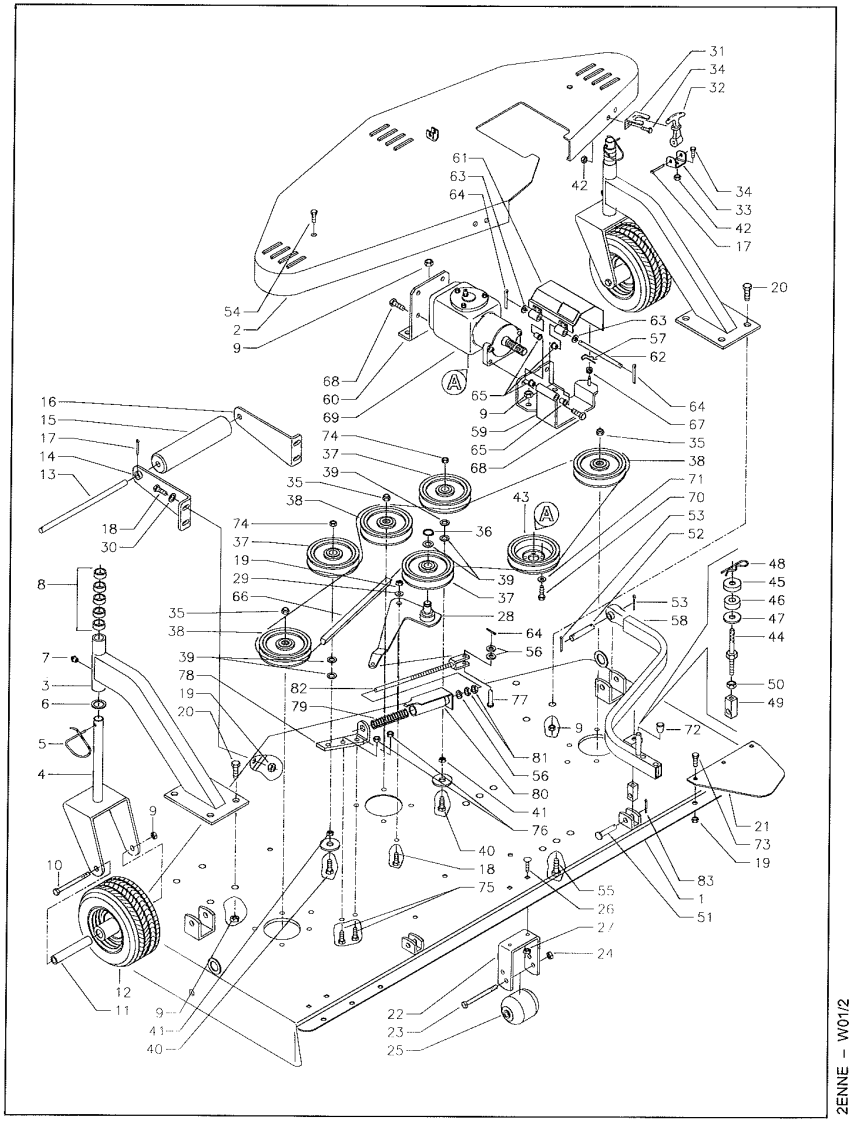

2ENNE – W01/2

PIATTO DI TAGLIO

DALLA MACCHINA
DE LA MAQUINA
DE LA MACHINE
FROM THE MACHINE
AB DER MASCHINE

N. 93519

Pos.	Code	Q.ty	Description	Notes
1	59092425	1	CHASSIS FRAME	
2	59092426	1	SHEET	
3	59035922	1	ARM	
4	59035923	1	FORK	
5	58135929	1	SPRING	
6	58135908	1	RING	
7	30000001	1	LUBRICATOR M10	
8	56135924	1	WASHER	
9	31241143	1	SELFLOCK NUT M14	
10	31112339	1	SCREW TE M14X140 UNI 5737	
11	56135926	1	SPACER	
12	59235925	1	WHEEL	
13	56192431	1	PIN	
14	59092429	1	SUPPORT	
15	57392430	1	ROLLER	
16	59092428	1	SUPPORT	
17	34110046	1	SPLIT PIN A4X50 UNI 1336	
18	31112219	1	SCREW TE M10X25 UNI 5739	
19	31241105	1	SELFLOCK NUT M10	
20	31112328	1	SCREW TE M14X35 UNI 5739	
21	56135931	1	REAR PROTECTION	
22	56135916	1	CONNECTION	
23	31112703	1	SCREW TE M12X120 UNI 5737	
24	31241126	1	SELFLOCK NUT M12	
25	58135917	1	ROLLER	
26	31121801	1	SCREW TTQ M8X20 UNI 5731	
27	31241085	1	SELFLOCK NUT M8 6S	
28	59092439	1	SUPPORT	
29	58135930	1	WASHER 10,5x30/2,5	
30	31411105	1	WASHER 10,5x21	
31	58035914	1	SPRING	
32	58192440	1	ROD	
33	58192437	1	CONNECTION	
34	31132039	1	SCREW M4X14 DIN.965	

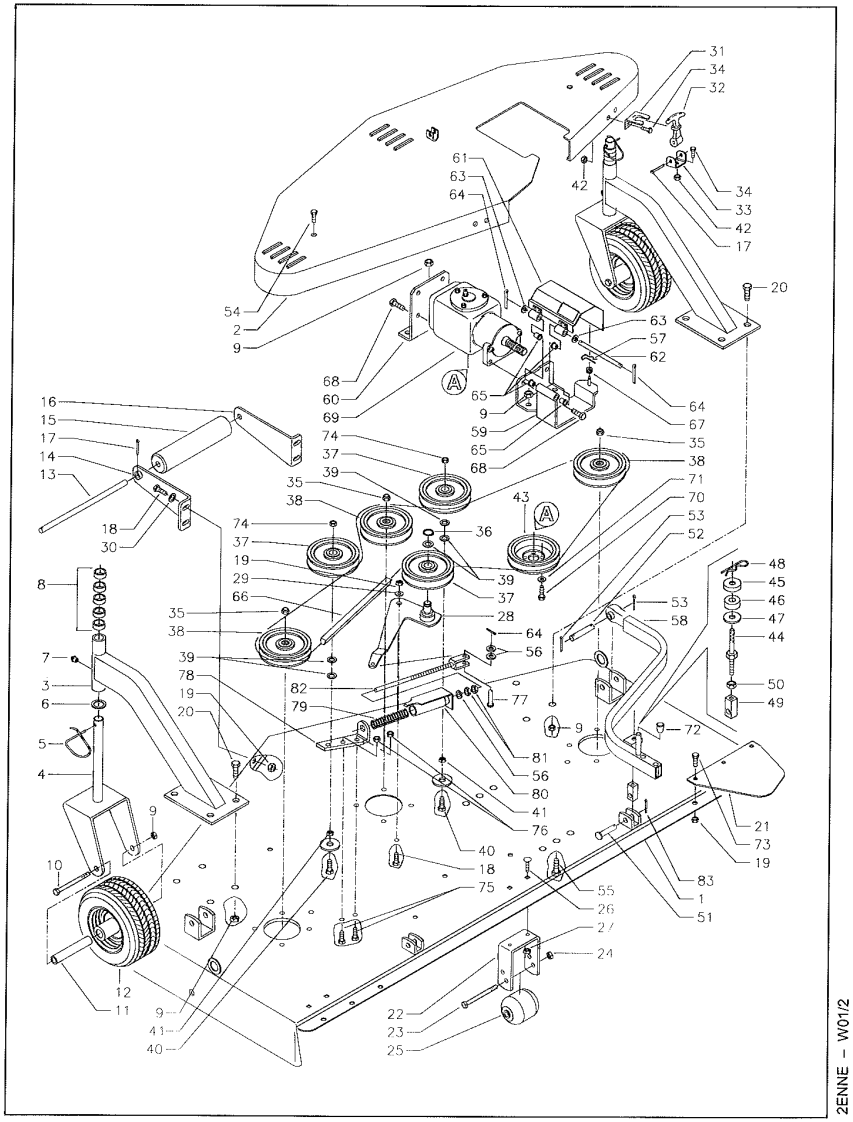

2ENNE – W01/2

PIATTO DI TAGLIO

DALLA MACCHINA
DE LA MAQUINA
DE LA MACHINE
FROM THE MACHINE
AB DER MASCHINE

N. 93519

Pos.	Code	Q.ty	Description	Notes
35	58192441	1	SELFLOCKING SPECIAL NUT M25	
36	35121020	1	SEEGER RING E 20 DIN 471	
37	58135911	1	PULLEY	
38	56392432	1	PULLEY	
39	31411210	1	WASHER 21x37	
40	31112506	1	SCREW TE M20X65 UNI 5739 8G	
41	31211200	1	NUT M20	
42	31241040	1	SELFLOCK NUT M4	
43	51135722	1	PULLEY	
44	56135010	1	PIN	
45	56535219	1	CUP	
46	57324272	1	STOPPER	
47	56124273	1	CUP	
48	58035199	1	PIN	
49	56335011	1	TERMINAL	
50	31211120	1	NUT M12 UNI 5588 6S	
51	56324274	1	PIN	
52	56335218	1	CONNECTING BOLT	
53	34110045	1	SPLIT PIN A4X45 UNI 1336	
54	31112223	1	SCREW TE M10X100 UNI 5737	
55	31111330	1	SCREW TE M14X30 UNI 5739 8G	
56	31411130	1	WASHER 13x24	
57	58050533	1	PIN	
58	59092109	1	RIGHT ARM	
58	59035928	1	LEFT ARM	
59	59035901	1	FRONT SUPPORT	
60	56135902	1	SUPPORT	
61	59092107	1	COMPLETE COVER	
62	56157539	1	PIN	
63	31411104	1	WASHER 10,5x18	
64	34110030	1	SPLIT PIN A3X20 UNI 1336	
65	55142109	1	BUSHING	
66	58135910	1	V BELT	
67	30000645	1	CABLE GLAND 80/110/15	

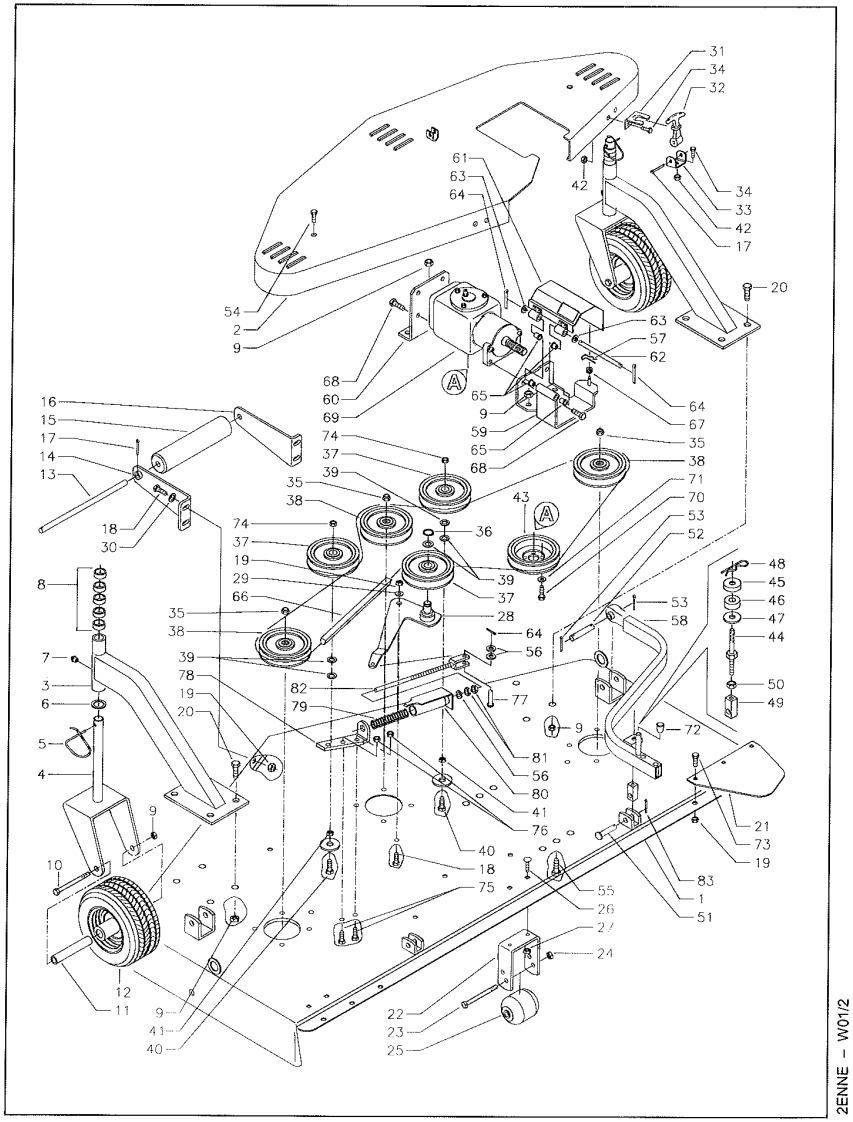

2ENNE – W01/2

PIATTO DI TAGLIO

DALLA MACCHINA
DE LA MAQUINA
DE LA MACHINE
FROM THE MACHINE
AB DER MASCHINE

N. 93519

Pos.	Code	Q.ty	Description	Notes
68	31112271	1	SCREW TE M12X25 UNI 5739	
69	59235719	1	MATRA BLADE CONTROL BOX	
70	31112150	1	SCREW TE M8X20 UNI 5739 8G	
71	31421083	1	WASHER	
72	58192002	1	GUARD	
73	31112210	1	SCREW TE M10X20 UNI 5739	
74	31241190	1	NUT M20	
75	31112151	1	SCREW TE M8X25 UNI 5739 8G	
76	31241080	1	HEXAGON SELFLOCK NUT M8	
77	56324268	1	PIN	
78	56192395	1	PLATE	
79	58024434	1	SPRING	
80	59092390	1	INDICATOR	
81	31231120	1	NUT M12 UNI 5589 6S	
82	59092393	1	COMPLETE TOWING LEVER	
83	34110041	1	SPLIT PIN A4X25 UNI 1336	

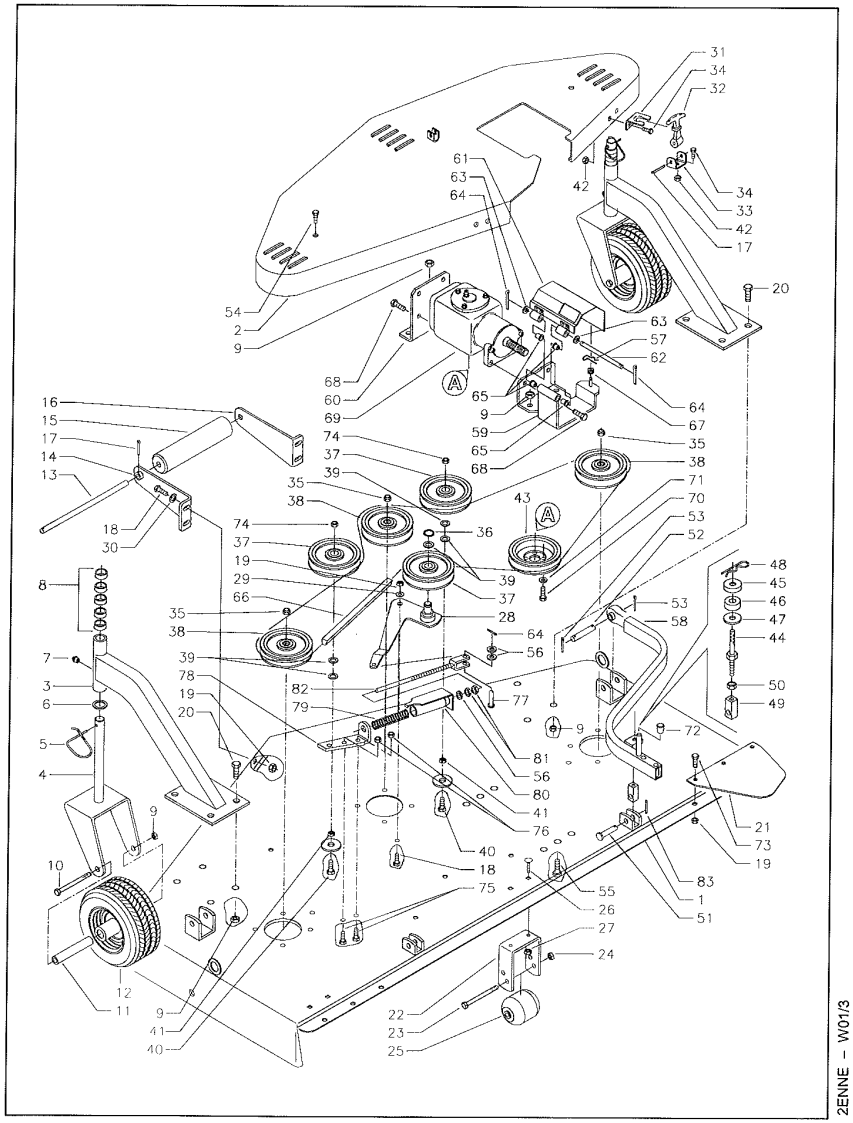

2ENNE – W01/3

PIATTO DI TAGLIO

DALLA MACCHINA
DE LA MAQUINA
DE LA MACHINE
FROM THE MACHINE
AB DER MASCHINE

N. 125984

Pos.	Code	Q.ty	Description	Notes
1	59092425	1	CHASSIS FRAME	
2	59092426	1	SHEET	
3	59035922	1	ARM	
4	59035923	1	FORK	
5	58135929	1	SPRING	
6	58135908	1	RING	
7	30000001	1	LUBRICATOR M10	
8	56135924	1	WASHER	
9	31241143	1	SELFLOCK NUT M14	
10	31112339	1	SCREW TE M14X140 UNI 5737	
11	56135926	1	SPACER	
12	59235925	1	WHEEL	
13	56192431	1	PIN	
14	59092429	1	SUPPORT	
15	57392430	1	ROLLER	
16	59092428	1	SUPPORT	
17	34110046	1	SPLIT PIN A4X50 UNI 1336	
18	31112219	1	SCREW TE M10X25 UNI 5739	
19	31241105	1	SELFLOCK NUT M10	
20	31112328	1	SCREW TE M14X35 UNI 5739	
21	56135931	1	REAR PROTECTION	
22	56135916	1	CONNECTION	
23	31112703	1	SCREW TE M12X120 UNI 5737	
24	31241126	1	SELFLOCK NUT M12	
25	58135917	1	ROLLER	
26	31121801	1	SCREW TTQ M8X20 UNI 5731	
27	31241085	1	SELFLOCK NUT M8 6S	
28	59092439	1	SUPPORT	
29	58135930	1	WASHER 10,5x30/2,5	
30	31411105	1	WASHER 10,5x21	
31	58035914	1	SPRING	
32	58192440	1	ROD	
33	58192437	1	CONNECTION	
34	31132039	1	SCREW M4X14 DIN.965	

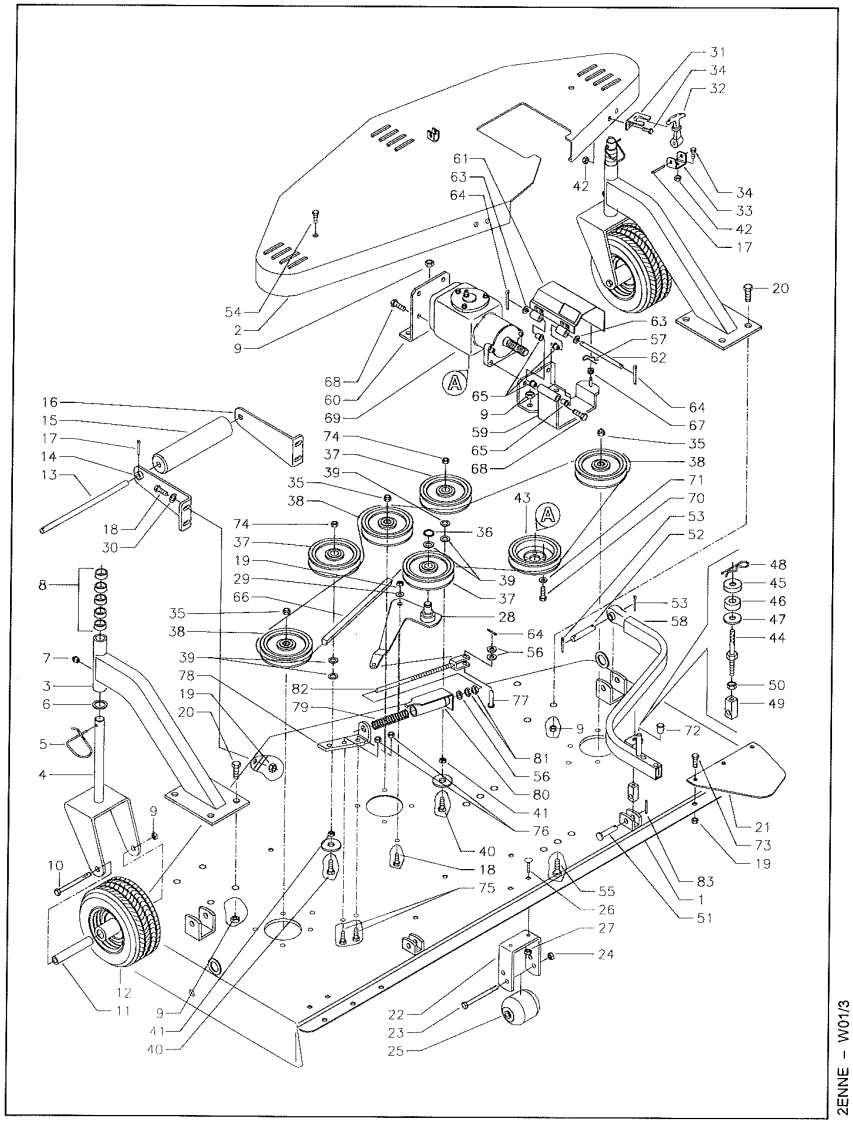

2ENNE – W01/3

PIATTO DI TAGLIO

DALLA MACCHINA
DE LA MAQUINA
DE LA MACHINE
FROM THE MACHINE
AB DER MASCHINE

N. 125984

Pos.	Code	Q.ty	Description	Notes
35	58192441	1	SELFLOCKING SPECIAL NUT M25	
36	35121020	1	SEEGER RING E 20 DIN 471	
37	58135911	1	PULLEY	
38	56392432	1	PULLEY	
39	31411210	1	WASHER 21x37	
40	31112506	1	SCREW TE M20X65 UNI 5739 8G	
41	31211200	1	NUT M20	
42	31241040	1	SELFLOCK NUT M4	
43	51135722	1	PULLEY	
44	56135010	1	PIN	
45	56535219	1	CUP	
46	57324272	1	STOPPER	
47	56124273	1	CUP	
48	58035199	1	PIN	
49	56335011	1	TERMINAL	
50	31211120	1	NUT M12 UNI 5588 6S	
51	56324274	1	PIN	
52	56335218	1	CONNECTING BOLT	
53	34110045	1	SPLIT PIN A4X45 UNI 1336	
54	31112223	1	SCREW TE M10X100 UNI 5737	
55	31111330	1	SCREW TE M14X30 UNI 5739 8G	
56	31411130	1	WASHER 13x24	
57	58050533	1	PIN	
58	59092109	1	RIGHT ARM	
58	59035928	1	LEFT ARM	
59	59035901	1	FRONT SUPPORT	
60	56135902	1	SUPPORT	
61	59092107	1	COMPLETE COVER	
62	56157539	1	PIN	
63	31411104	1	WASHER 10,5x18	
64	34110030	1	SPLIT PIN A3X20 UNI 1336	
65	55142109	1	BUSHING	
66	58193135	1	V BELT	
67	30000645	1	CABLE GLAND 80/110/15	

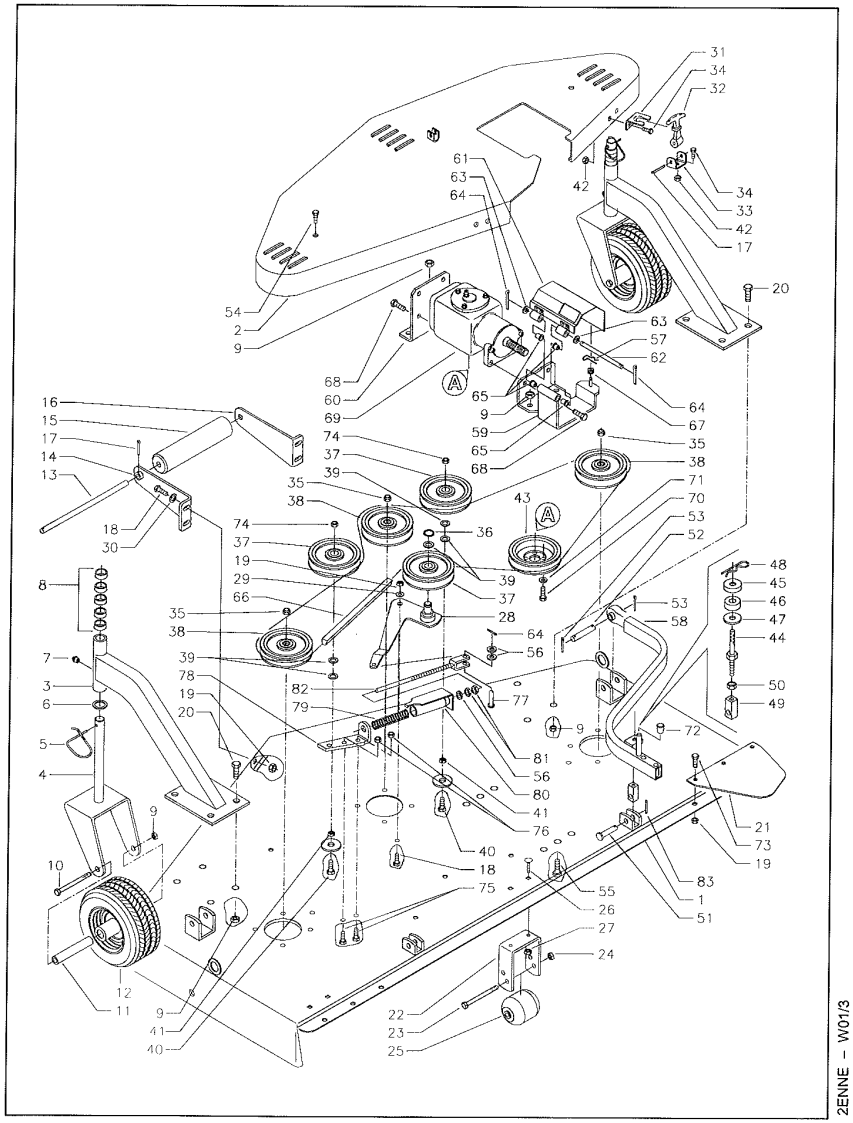

2ENNE – W01/3

PIATTO DI TAGLIO

DALLA MACCHINA
DE LA MAQUINA
DE LA MACHINE
FROM THE MACHINE
AB DER MASCHINE

N. 125984

Pos.	Code	Q.ty	Description	Notes
68	31112271	1	SCREW TE M12X25 UNI 5739	
69	59235719	1	MATRA BLADE CONTROL BOX	
70	31112150	1	SCREW TE M8X20 UNI 5739 8G	
71	31421083	1	WASHER	
72	58192002	1	GUARD	
73	31112210	1	SCREW TE M10X20 UNI 5739	
74	31241190	1	NUT M20	
75	31112151	1	SCREW TE M8X25 UNI 5739 8G	
76	31241080	1	HEXAGON SELFLOCK NUT M8	
77	56324268	1	PIN	
78	56192395	1	PLATE	
79	58024434	1	SPRING	
80	59092390	1	INDICATOR	
81	31231120	1	NUT M12 UNI 5589 6S	
82	59092393	1	COMPLETE TOWING LEVER	
83	34110041	1	SPLIT PIN A4X25 UNI 1336	

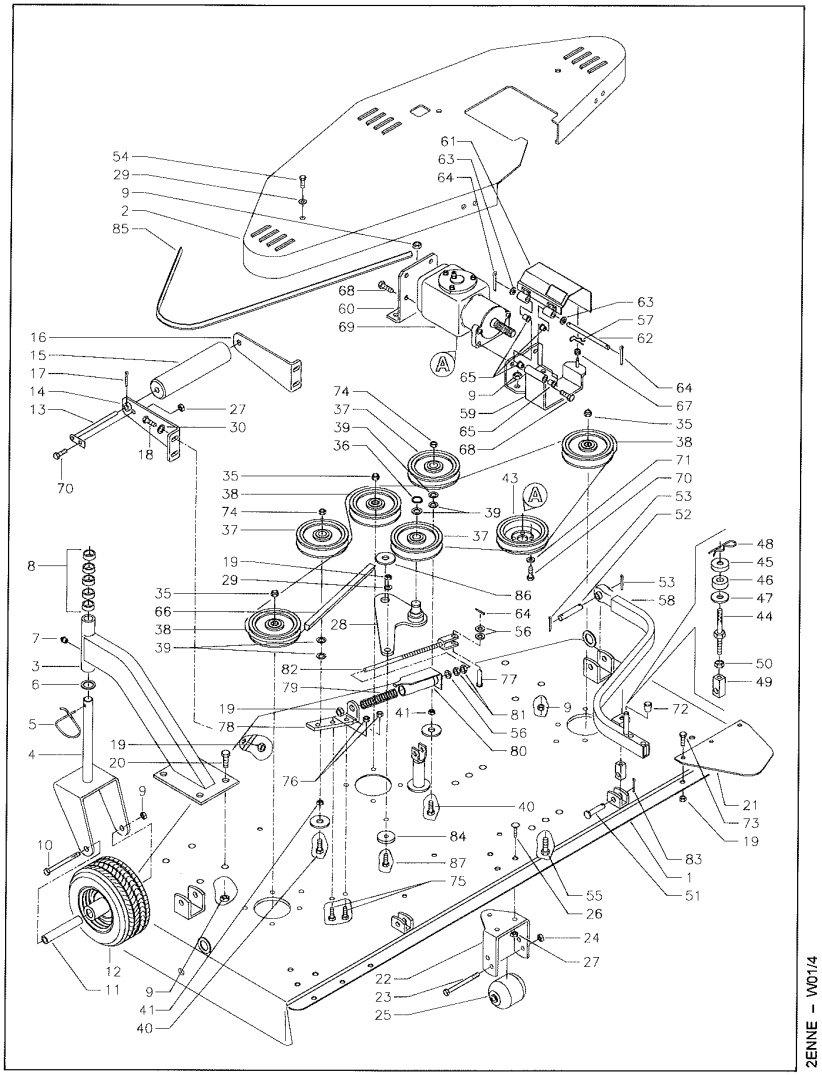

2ENNE – W01/4

PIATTO DI TAGLIO

DALLA MACCHINA
DE LA MAQUINA
DE LA MACHINE
FROM THE MACHINE
AB DER MASCHINE

N. 377696

Pos.	Code	Q.ty	Description	Notes
1	59093493	1	CHASSIS FRAME	
2	59093139	1	STRIKER PLATE	
3	59035922	1	ARM	
4	59035923	1	FORK	
5	58135929	1	SPRING	
6	58135908	1	RING	
7	30000001	1	LUBRICATOR M10	
8	56135924	1	WASHER	
9	31241143	1	SELFLOCK NUT M14	
10	31112339	1	SCREW TE M14X140 UNI 5737	
11	56135926	1	SPACER	
12	59294190	1	WHEEL	
13	59094195	1	PERNO RULLO ANT. C.TO 0067365	
14	56194194	1	LH ROLLER SUPPORT PLATE	
15	57392430	1	ROLLER	
16	59092428	1	SUPPORT	
18	31112219	1	SCREW TE M10X25 UNI 5739	
19	31241105	1	SELFLOCK NUT M10	
20	31112328	1	SCREW TE M14X35 UNI 5739	
21	56135931	1	REAR PROTECTION	
22	56194191	1	REAR WHEEL CONNECTION	
23	31112703	1	SCREW TE M12X120 UNI 5737	
24	31241126	1	SELFLOCK NUT M12	
25	58135917	1	ROLLER	
26	31121801	1	SCREW TTQ M8X20 UNI 5731	
27	31241085	1	SELFLOCK NUT M8 6S	
28	59093149	1	TENSION ROLLER SUPPORT	
29	58135930	1	WASHER 10,5x30/2,5	
30	31411105	1	WASHER 10,5x21	
35	58192441	1	SELFLOCKING SPECIAL NUT M25	
36	35121020	1	SEEGER RING E 20 DIN 471	
37	58135911	1	PULLEY	
38	56392432	1	PULLEY	
39	31411210	1	WASHER 21x37	

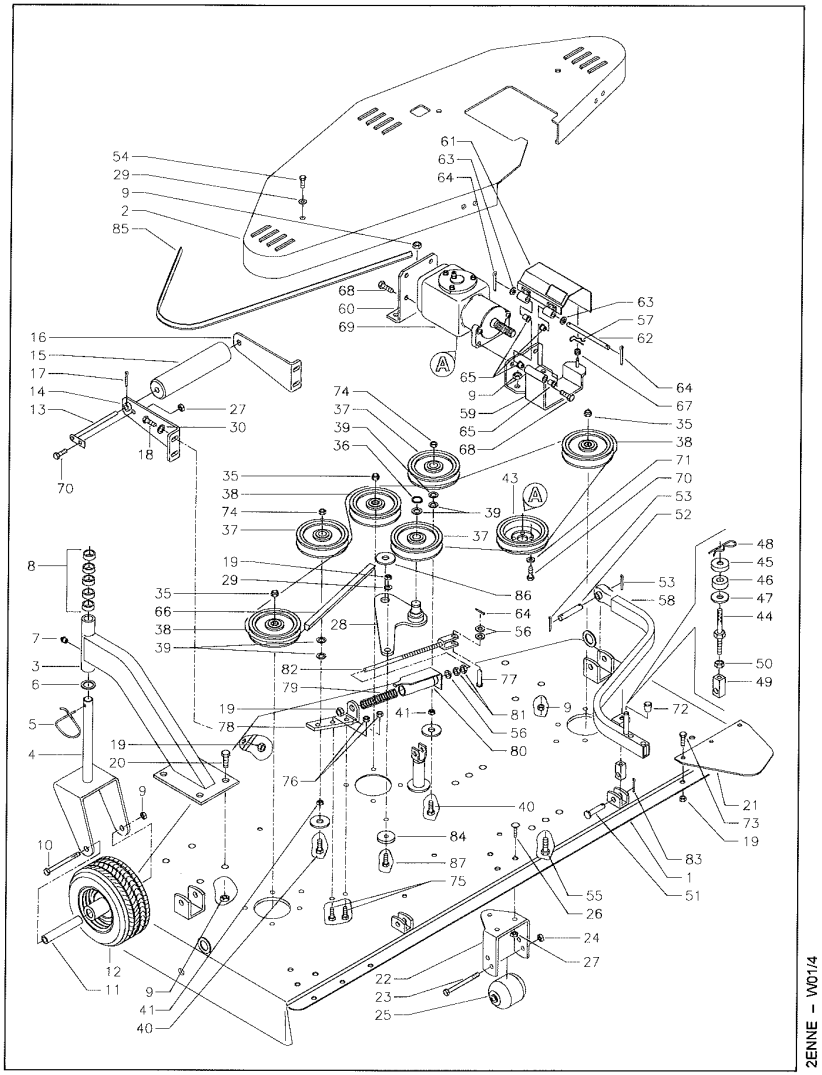

2ENNE – W01/4

PIATTO DI TAGLIO

DALLA MACCHINA
DE LA MAQUINA
DE LA MACHINE
FROM THE MACHINE
AB DER MASCHINE

N. 377696

Pos.	Code	Q.ty	Description	Notes
40	31112506	1	SCREW TE M20X65 UNI 5739 8G	
41	31211200	1	NUT M20	
43	51135722	1	PULLEY	
44	56135010	1	PIN	
45	56535219	1	CUP	
46	57324272	1	STOPPER	
47	56124273	1	CUP	
48	58095567	1	PIN	
49	56335011	1	TERMINAL	
50	31211120	1	NUT M12 UNI 5588 6S	
51	56324274	1	PIN	
52	56335218	1	CONNECTING BOLT	
53	34110045	1	SPLIT PIN A4X45 UNI 1336	
54	31112223	1	SCREW TE M10X100 UNI 5737	
55	31111330	1	SCREW TE M14X30 UNI 5739 8G	
56	31411130	1	WASHER 13x24	
57	58050533	1	PIN	
58	59035928	1	LEFT ARM	
58	59092109	1	RIGHT ARM	
59	59035901	1	FRONT SUPPORT	
60	56135902	1	SUPPORT	
61	59092107	1	COMPLETE COVER	
62	56157539	1	PIN	
63	31411104	1	WASHER 10,5x18	
64	34110030	1	SPLIT PIN A3X20 UNI 1336	
65	55142109	1	BUSHING	
66	58193135	1	V BELT	
67	30000645	1	CABLE GLAND 80/110/15	
68	31112271	1	SCREW TE M12X25 UNI 5739	
69	59235719	1	MATRA BLADE CONTROL BOX	
70	31112150	1	SCREW TE M8X20 UNI 5739 8G	
71	31421083	1	WASHER	
72	58192002	1	GUARD	
73	31112210	1	SCREW TE M10X20 UNI 5739	

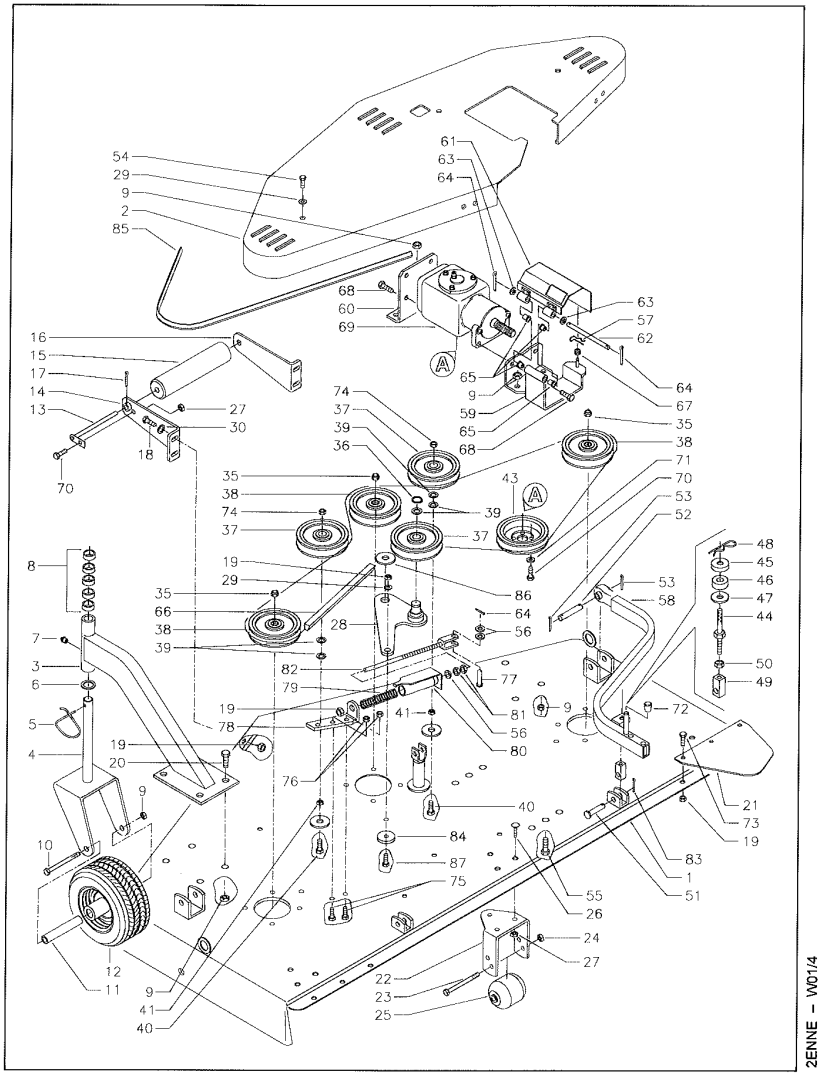

2ENNE – W01/4

PIATTO DI TAGLIO

DALLA MACCHINA
DE LA MAQUINA
DE LA MACHINE
FROM THE MACHINE
AB DER MASCHINE

N. 377696

Pos.	Code	Q.ty	Description	Notes
74	31241190	1	NUT M20	
75	31112151	1	SCREW TE M8X25 UNI 5739 8G	
76	31241080	1	HEXAGON SELFLOCK NUT M8	
77	56324268	1	PIN	
78	56192395	1	PLATE	
79	58024434	1	SPRING	
80	59092390	1	INDICATOR	
81	31231124	1	NUT M12X1,25	
82	59093133	1	COMPLETE TOWING LEVER	
83	34110041	1	SPLIT PIN A4X25 UNI 1336	
84	56593134	1	SPACER	
85	55194192	1	GASKET	
86	31410110	1	SHIM 11x36/1 C72	
87	31112211	1	SCREW TE M10X30 UNI 5739	

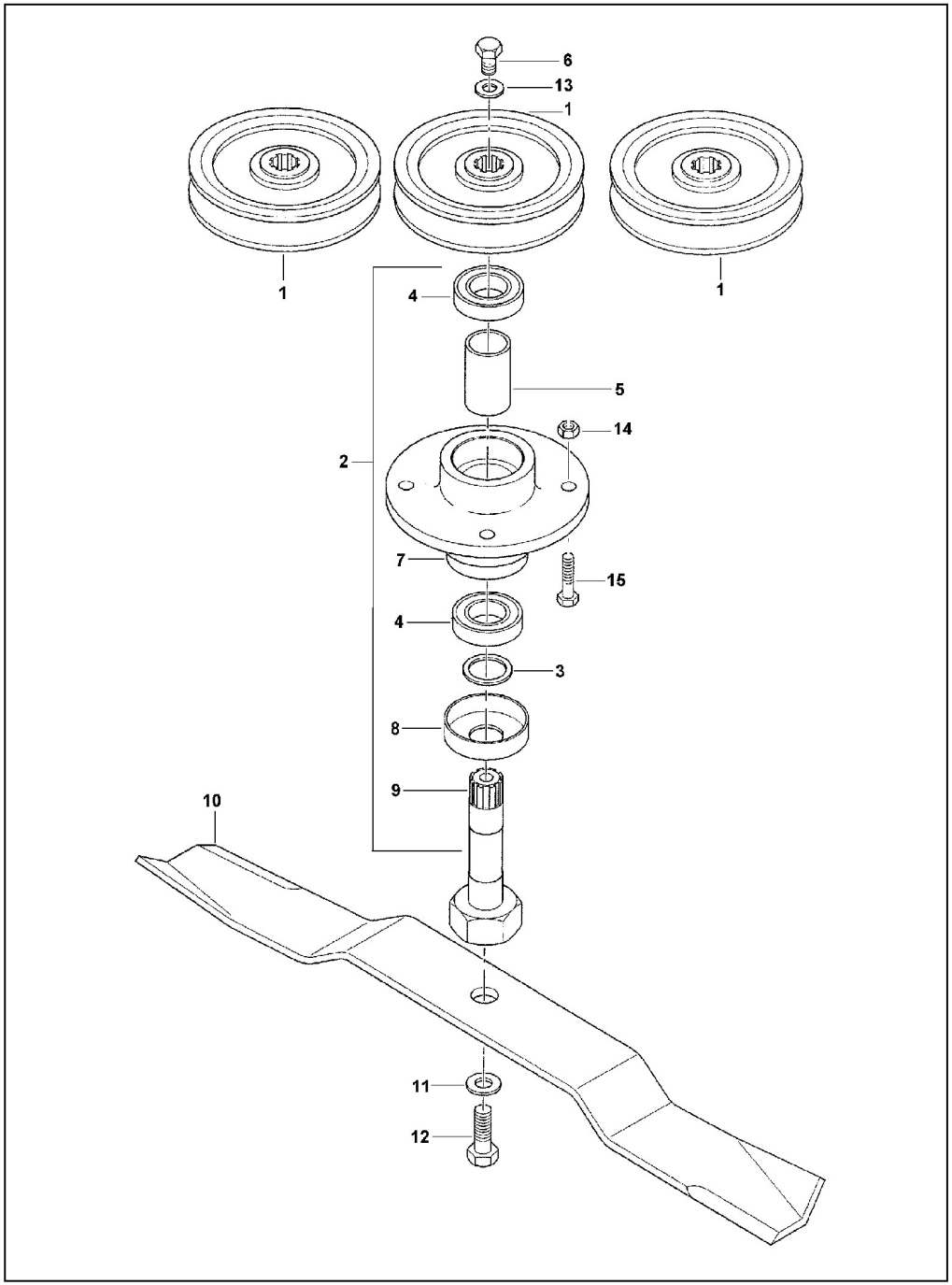

MOZZO LAMA

Pos.	Code	Q.ty	Description	Notes
1	56335903	1	PULLEY	
2	59235934	1	UNIT	
3	58135908	1	RING	
4	37112249	1	BEARING 6205-2RS (255215) SKF	
5	56135906	1	SPACER	
6	31112900	1	SCREW TE M10X1,25X20 UNI5740	
7	58135904	1	SUPPORT	
8	58135907	1	SMALL COVER	
9	56335905	1	SHAFT	
10	58135909	1	KNIFE	
11	31421253	1	WASHER	
12	58135932	1	SCREW	
13	58135930	1	WASHER 10,5x30/2,5	
14	31241105	1	SELFLOCK NUT M10	
15	31112211	1	SCREW TE M10X30 UNI 5739	

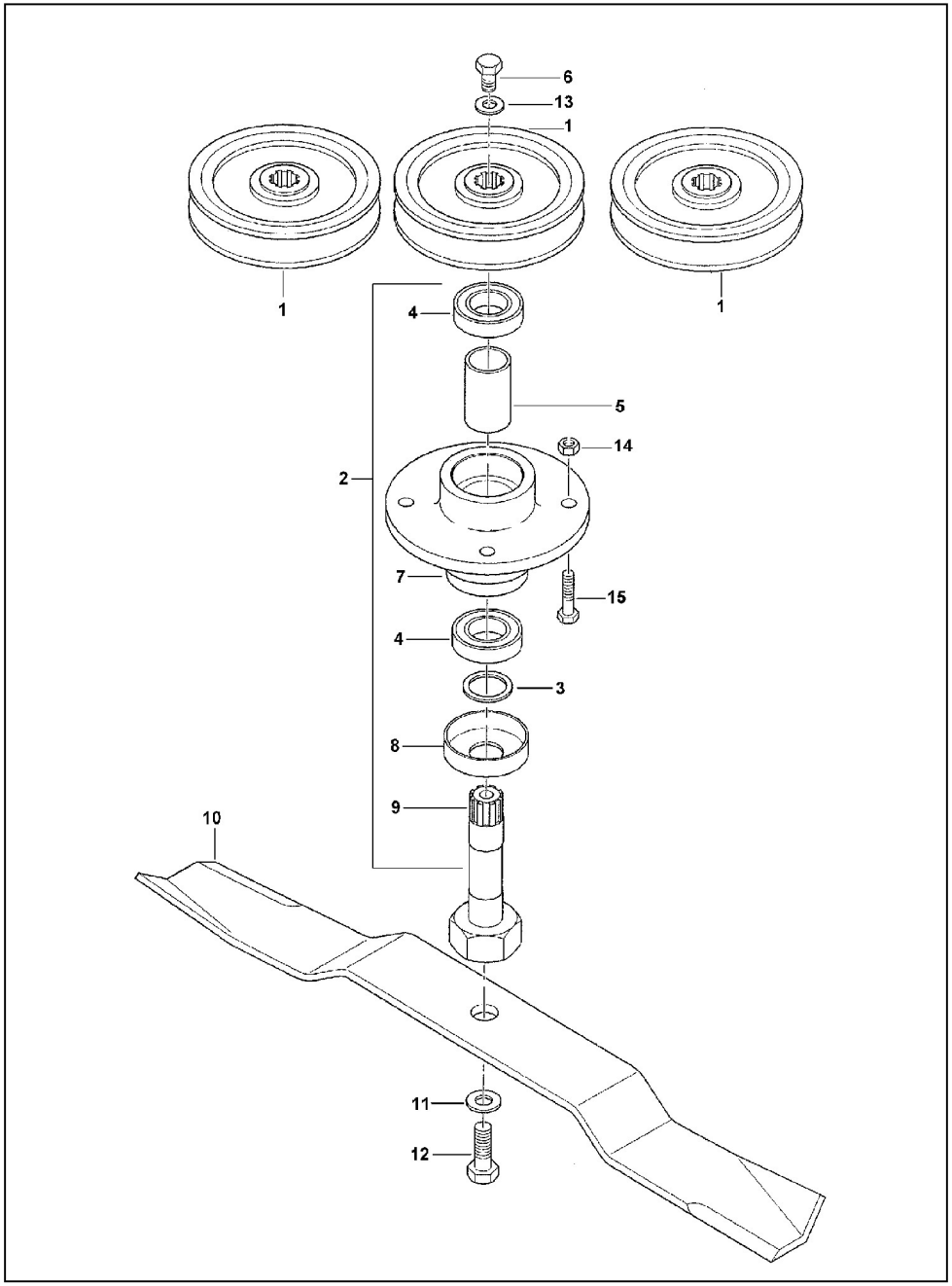

2ENNE – W02/1

MOZZO LAMA

DALLA MACCHINA
DE LA MAQUINA
DE LA MACHINE
FROM THE MACHINE
AB DER MASCHINE

N. 77103

Pos.	Code	Q.ty	Description	Notes
1	56335903	1	PULLEY	
2	59292111	1	UNIT	
3	58135908	1	RING	
4	37112249	1	BEARING 6205-2RS (255215) SKF	
5	56135906	1	SPACER	
6	31241185	1	SELFLOCK NUT M20X1,5	
7	58135904	1	SUPPORT	
8	58135907	1	SMALL COVER	
9	56392112	1	SHAFT	
10	58135909	1	KNIFE	
11	31421253	1	WASHER	
12	58135932	1	SCREW	
13	31411210	1	WASHER 21x37	
14	31241105	1	SELFLOCK NUT M10	
15	31112211	1	SCREW TE M10X30 UNI 5739	

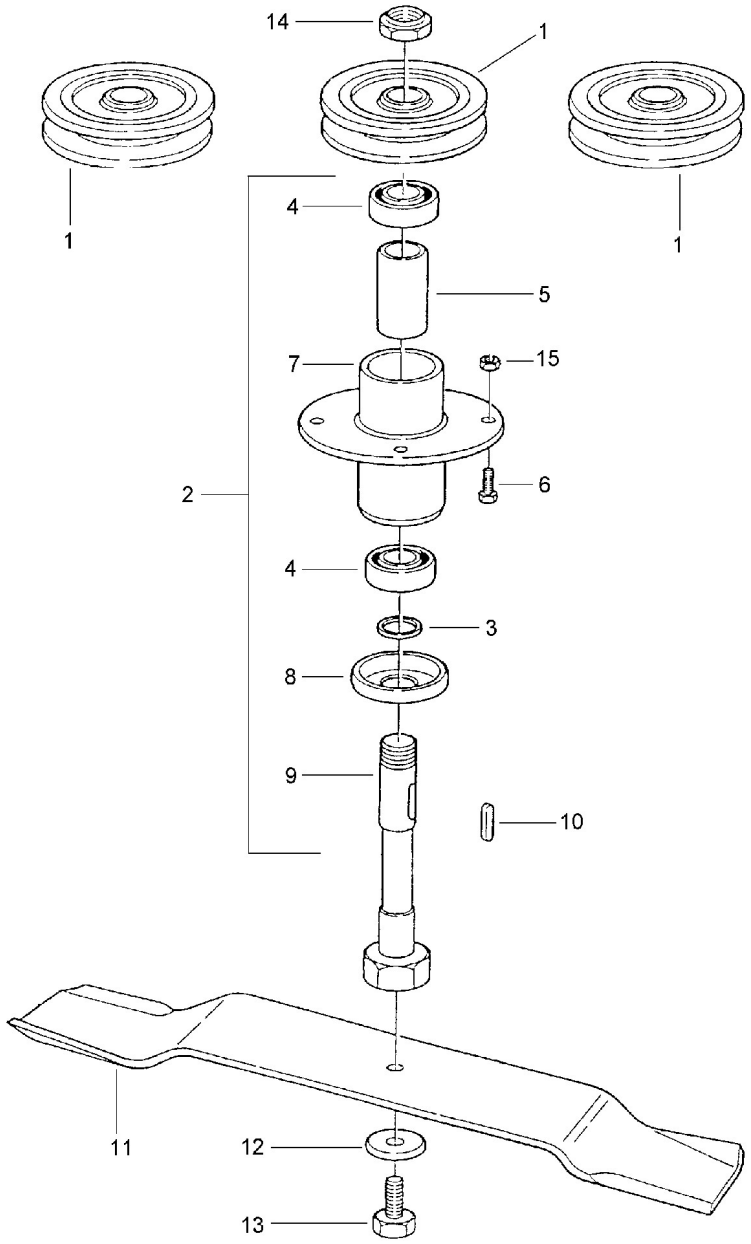

MOZZO LAMA

DALLA MACCHINA
DE LA MAQUINA
DE LA MACHINE
FROM THE MACHINE
AB DER MASCHINE

N. 93519

Pos.	Code	Q.ty	Description	Notes
1	56392432	1	PULLEY	
2	59292433	1	UNIT	
3	58135908	1	RING	
4	37112249	1	BEARING 6205-2RS (255215) SKF	
5	56192436	1	SPACER	
6	31112211	1	SCREW TE M10X30 UNI 5739	
7	58192434	1	SUPPORT	
8	58135907	1	SMALL COVER	
9	56392435	1	SHAFT	
10	34321063	1	KEY A8X7X25 UNI 6604	
11	58135909	1	KNIFE	
12	31421253	1	WASHER	
13	58135932	1	SCREW	
14	58192441	1	SELFLOCKING SPECIAL NUT M25	
15	31241105	1	SELFLOCK NUT M10	

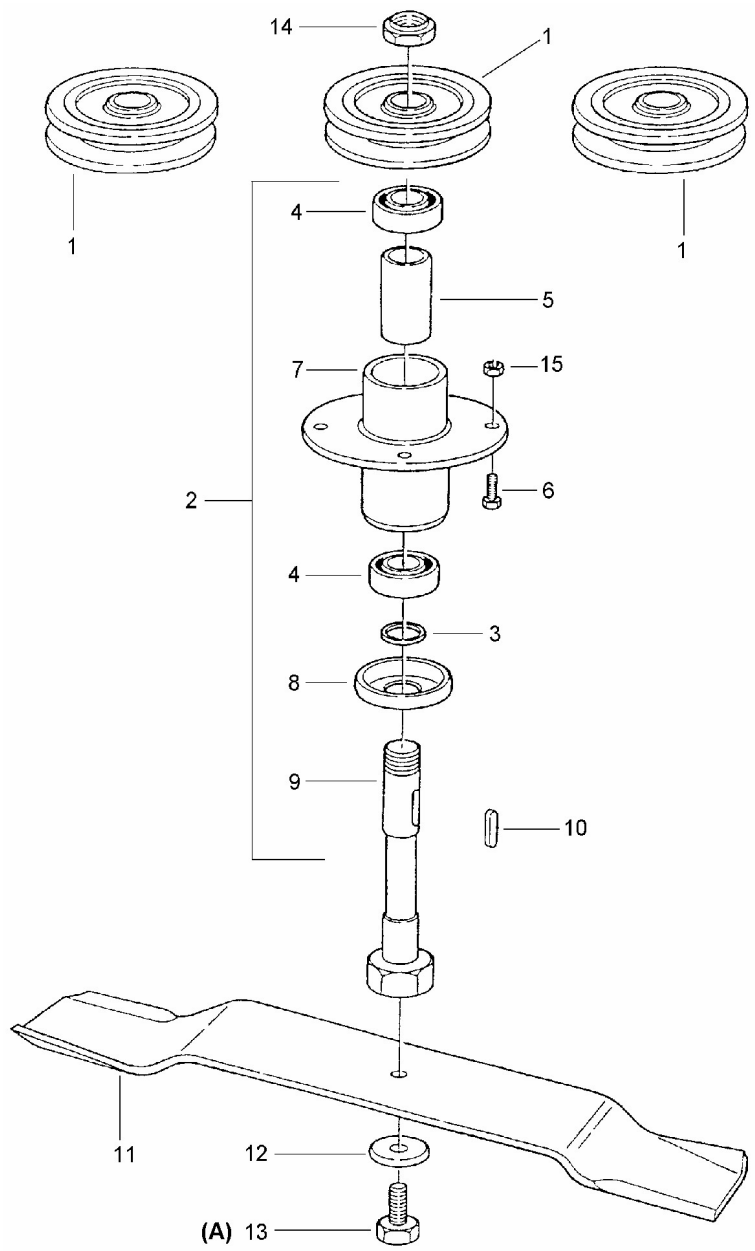

MOZZO LAMA

DALLA MACCHINA	**AGGIORNAMENTO**
DE LA MAQUINA	**APLAZAMIENTO**
DE LA MACHINE	**MISE A JOUR**
FROM THE MACHINE	**REVISION**
AB DER MASCHINE	**ANPASSUNG**

Pos.	Code	Q.ty	Description	Notes
1	56392432	1	PULLEY	
2	59292433	1	UNIT	
3	58135908	1	RING	
4	37112249	1	BEARING 6205-2RS (255215) SKF	
5	56192436	1	SPACER	
6	31112211	1	SCREW TE M10X30 UNI 5739	
7	58192434	1	SUPPORT	
8	58135907	1	SMALL COVER	
9	56392435	1	SHAFT	
10	34321063	1	KEY A8X7X25 UNI 6604	
11	58135909	1	KNIFE	
12	31421253	1	WASHER	
13	58193497	1	SCREW	
14	58192441	1	SELFLOCKING SPECIAL NUT M25	
15	31241105	1	SELFLOCK NUT M10	

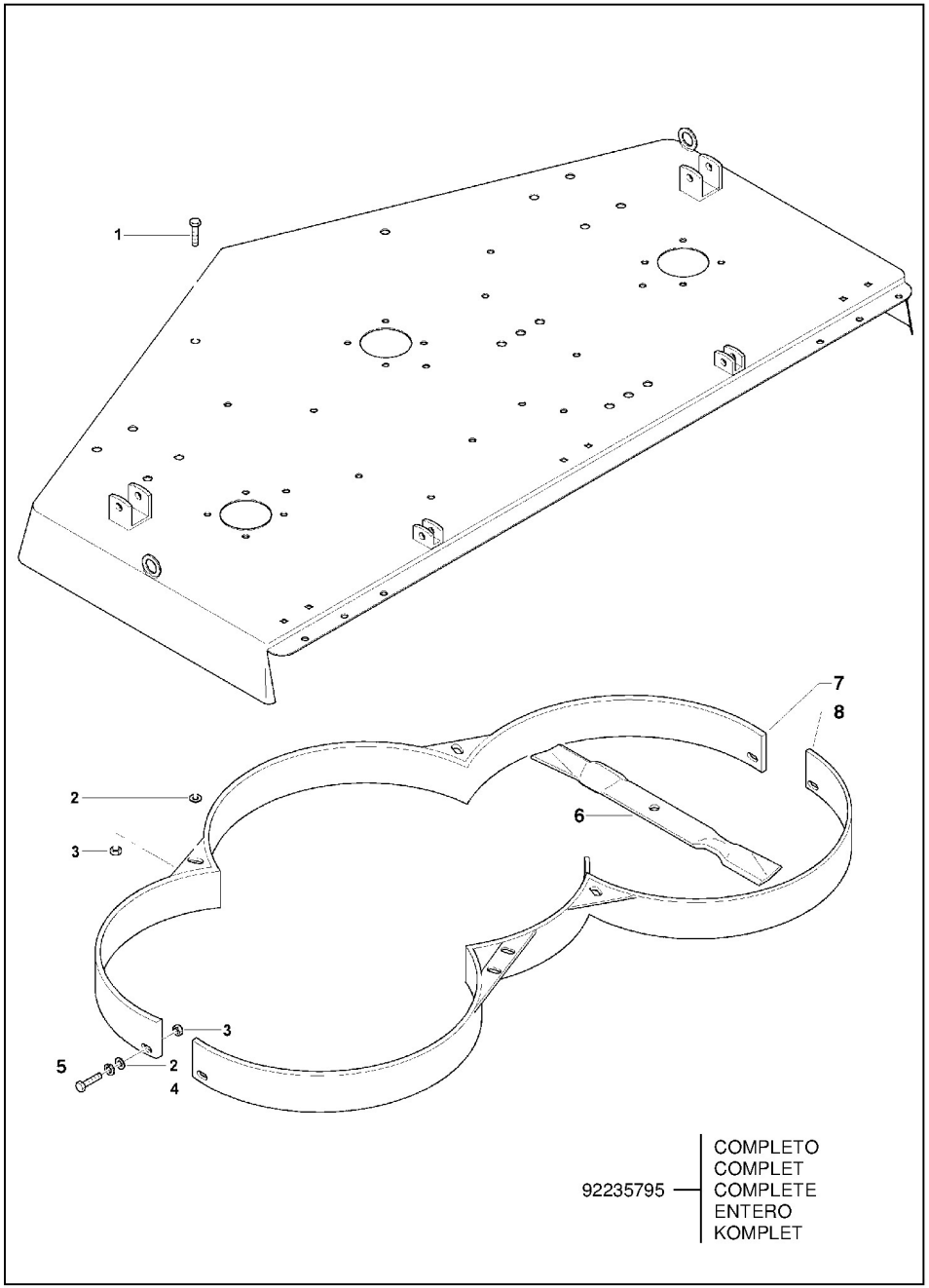

2ENNE – W03/0

KIT MULCHING

FINO ALLA MACCHINA
HASTA LA MAQUINA
JUSQU'À LA MACHINE
UP TO MACHINE
BIS DER MASCHINE

N. 93518

Pos.	Code	Q.ty	Description	Notes
1	31112210	1	SCREW TE M10X20 UNI 5739	
2	58135930	1	WASHER 10,5x30/2,5	
3	31241105	1	SELFLOCK NUT M10	
4	31112211	1	SCREW TE M10X30 UNI 5739	
5	31221120	1	NUT M12 UNI 5587 6S	
6	58192029	1	KNIFE	
7	58192027	1	DUCT	
8	58192028	1	DUCT	

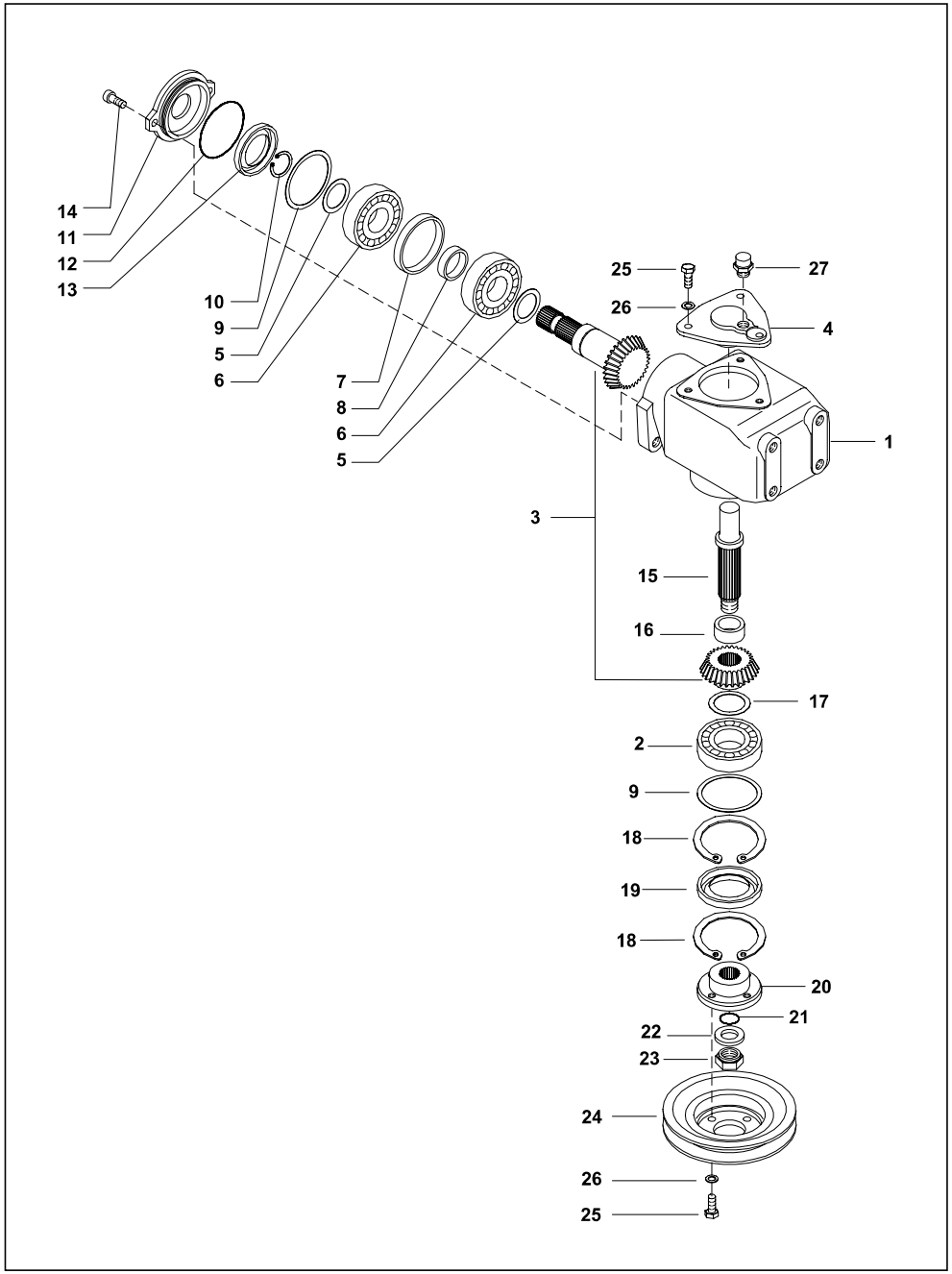

2ENNE – W04/0

SCATOLA INGRANAGGI

Pos.	Code	Q.ty	Description	Notes
1	51135594	1	BOX	
2	37111355	1	BEARING 6207 C3 (35X72X17) SKF	
3	59335715	1	BEVEL GEAR	
4	59235717	1	COVER	
5	58125949	1	SHIM	
5	58125950	1	SHIM	
5	58125951	1	SHIM	
6	37111303	1	BEARING 6306 (30X72X19) SKF	
7	56124210	1	WASHER 63,6x70/10	
8	56124211	1	WASHER 31,6x38/10	
9	58125946	1	SHIM	
9	58125947	1	SHIM	
9	58125948	1	SHIM	
9	58125958	1	SHIM	
10	35121030	1	SEEGER RING E 30 DIN 471	
11	52324201	1	COVER	
12	38116510	1	RING OR 3262 (66,35X2,62)	
13	38213006	1	OIL SEAL 30X62X7	
14	31152081	1	SCREW TCEI M8X20 UNI 5931	
15	56435723	1	CONTROL SHAFT	
16	56135724	1	WASHER 24,6x33,7/15	
17	58125940	1	SHIM	
17	58125941	1	SHIM	
17	58125942	1	SHIM	
18	35111072	1	SEEGER RING	
19	38214505	1	OIL SEAL 45X72X8 BAUSL	
20	56435725	1	FLANGE	
21	38112022	1	O-RING 4081 (20,22X3,53)	
22	56335728	1	WASHER	
23	58035250	1	NUT M18x1,5	
24	51135722	1	PULLEY	
25	31112150	1	SCREW TE M8X20 UNI 5739 8G	
26	31421083	1	WASHER	
27	30040005	1	PLUG TS1 1/4 GAS	

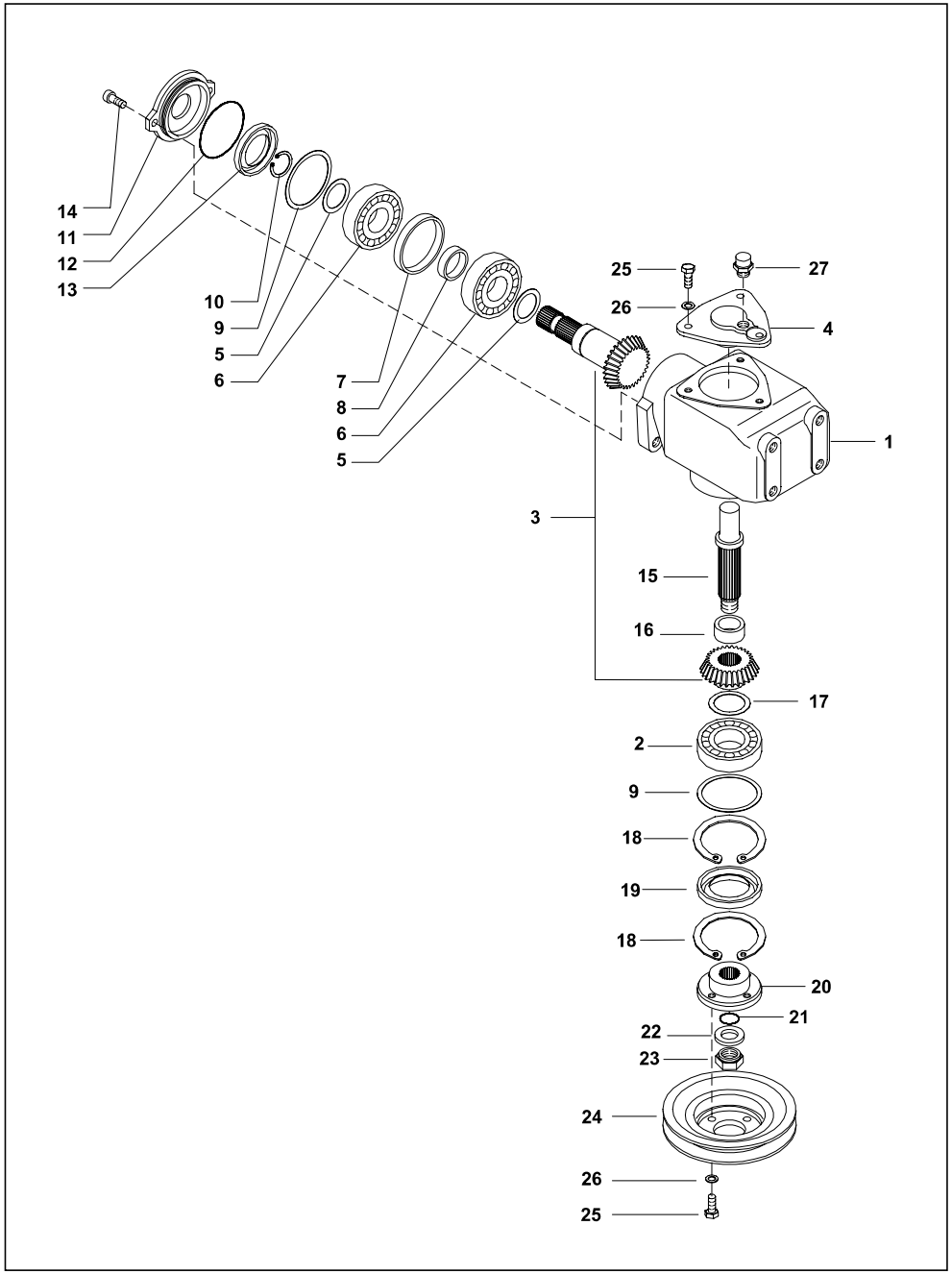

2ENNE – W04/1

SCATOLA INGRANAGGI

Pos.	Code	Q.ty	Description	Notes
1	51135594	1	BOX	
2	37111355	1	BEARING 6207 C3 (35X72X17) SKF	
3	59335715	1	BEVEL GEAR	
4	59235717	1	COVER	
5	58125949	1	SHIM	
5	58125950	1	SHIM	
5	58125951	1	SHIM	
6	37111303	1	BEARING 6306 (30X72X19) SKF	
7	56124210	1	WASHER 63,6x70/10	
8	56124211	1	WASHER 31,6x38/10	
9	58125946	1	SHIM	
9	58125947	1	SHIM	
9	58125948	1	SHIM	
9	58125958	1	SHIM	
10	35121030	1	SEEGER RING E 30 DIN 471	
11	52392468	1	COVER	
12	38116510	1	RING OR 3262 (66,35X2,62)	
13	38213006	1	OIL SEAL 30X62X7	
14	31152081	1	SCREW TCEI M8X20 UNI 5931	
15	56435723	1	CONTROL SHAFT	
16	56135724	1	WASHER 24,6x33,7/15	
17	58125940	1	SHIM	
17	58125941	1	SHIM	
17	58125942	1	SHIM	
18	35111072	1	SEEGER RING	
19	38214505	1	OIL SEAL 45X72X8 BAUSL	
20	56435725	1	FLANGE	
21	38112022	1	O-RING 4081 (20,22X3,53)	
22	56335728	1	WASHER	
23	58035250	1	NUT M18x1,5	
24	51135722	1	PULLEY	
25	31112150	1	SCREW TE M8X20 UNI 5739 8G	
26	31421083	1	WASHER	
27	30040005	1	PLUG TS1 1/4 GAS	

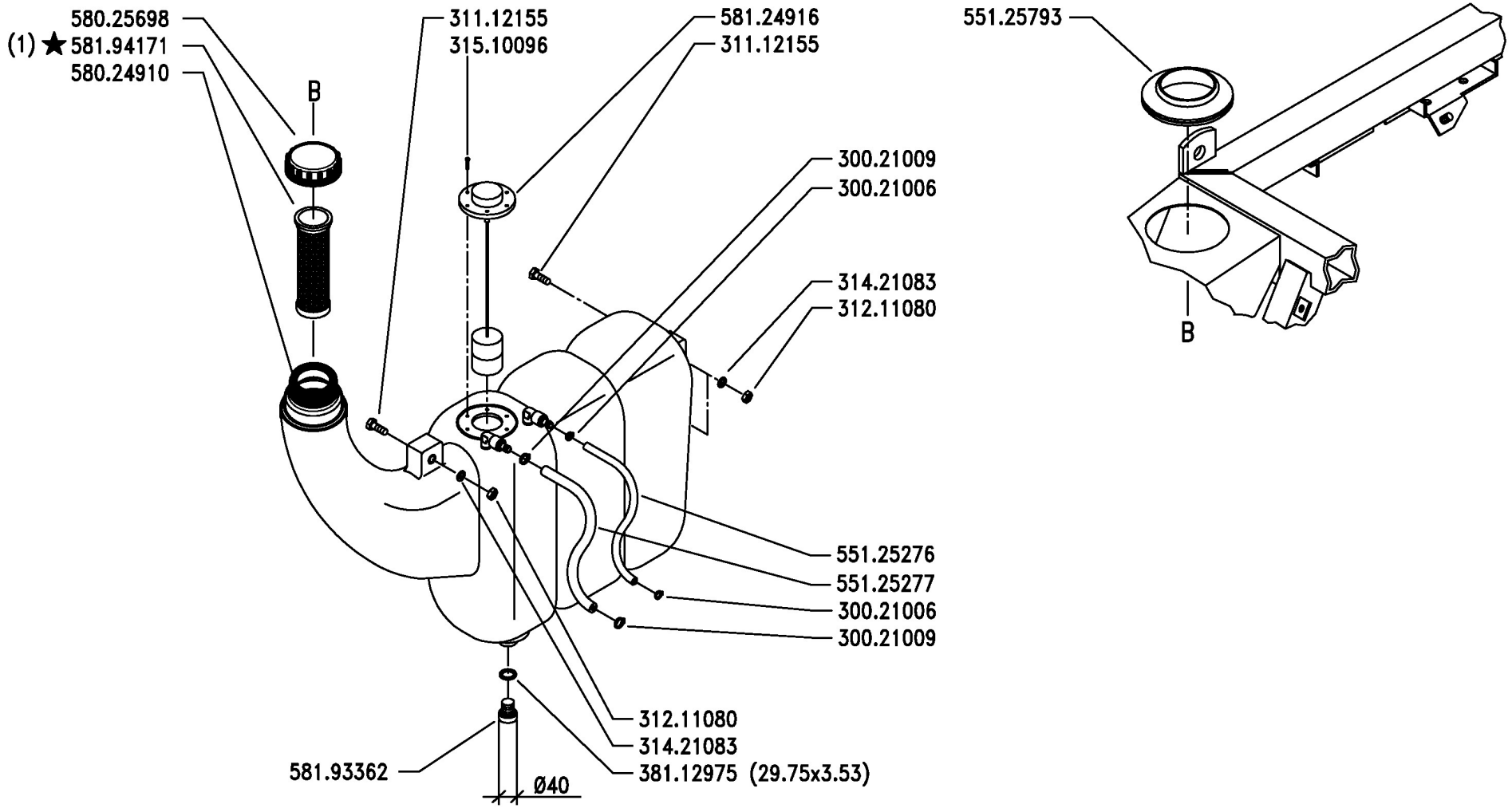

(1) sostituisce 581.25882

BCS	SERIE MA.TRA	SERBATOIO CARBURANTE FUEL TANK / RÉSERVOIR A CARBURANT DEPÓSITO CARBURANTE / KRAFTSTOFFBEHÄLTER	DALLA MACCHINA DE LA MAQUINA DE LA MACHINE FROM THE MACHINE AB DER MASCHINE ★ N.	AGGIORNAMENTO APLAZAMIENTO MISE A JOUR REVISION ANPASSUNG	C03 01/20

Pos.	Code	Q.ty	Description	Notes
30021006	30021006	1	CLAMP 7-11	
30021009	30021009	1	CLAMP 10/16-9	
31112155	31112155	1	SCREW TE M8X45 UNI 5739 8G	
31211080	31211080	1	NUT M8	
31421083	31421083	1	WASHER	
31510096	31510096	1	RIBBED SCREW 4,2X16	
38112975	38112975	1	O-RING 4118 (29,75X3,53)	
55125276	55125276	1	PIPE D.5	
55125277	55125277	1	PIPE D.6	
55125793	55125793	1	SLEEVE	
58024910	58024910	1	FUEL TANK	
58025698	58025698	1	PLUG	
58124916	58124916	1	TANK INDICATOR	
58193362	58193362	1	PLUG	
58194171	58194171	1	FUEL FILTER	

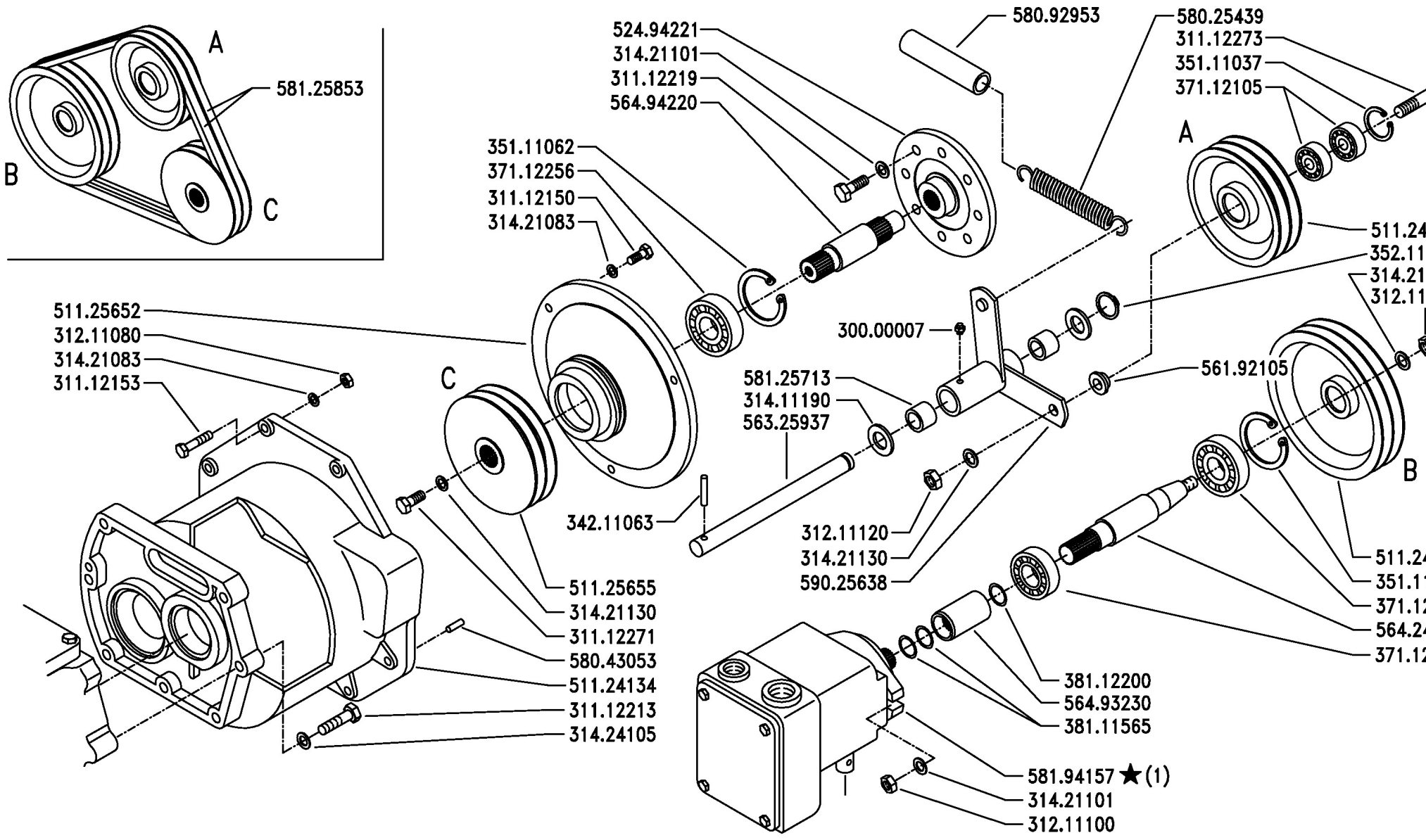

(1) sostituisce 581.35650

BCS	SERIE MA.TRA	TRASMISSIONE IDROSTATICA (MT103 -MT104 - MT205) HYDROSTATIC TRANSMISSION (MT103 – MT104 – MT205) CONNEXION HYDROSTATIQUE (MT103 – MT104 – MT205) TRANSMISIÓN HIDROSTÁTICA (MT103 – MT104 – MT205) HYDROSTATISCHES GETRIEBE (MT103 – MT104 – MT205)	DALLA MACCHINA DE LA MAQUINA DE LA MACHINE FROM THE MACHINE AB DER MASCHINE ★ N.	845892	E01 11/20

Pos.	Code	Q.ty	Description	Notes
30000007	30000007	1	LUBRICATOR .M8x1,25 UNI 7663A	
31112150	31112150	1	SCREW TE M8X20 UNI 5739 8G	
31112153	31112153	1	SCREW TE M8X35 UNI 5739 8G	
31112213	31112213	1	SCREW TE M10X40 UNI 5739	
31112219	31112219	1	SCREW TE M10X25 UNI 5739	
31112271	31112271	1	SCREW TE M12X25 UNI 5739	
31112273	31112273	1	SCREW TE M12X50 UNI 5739	
31211080	31211080	1	NUT M8	
31211100	31211100	1	NUT M10	
31211120	31211120	1	NUT M12 UNI 5588 6S	
31211121	31211121	1	NUT M12X1,25	
31411190	31411190	1	WASHER 19x34	
31421083	31421083	1	WASHER	
31421101	31421101	1	WASHER	
31421130	31421130	1	WASHER	
31424105	31424105	1	SPRING WASHER 10,5	
34211063	34211063	1	ROLL PIN	
35111037	35111037	1	SEEGER RING I 37 DIN 472	
35111062	35111062	1	SEEGER RING I 62 DIN 472	
35211150	35211150	1	SEEGER RING E 15 UNI 7434	
37112105	37112105	1	BEARING 6301-2RS (123712) SKF	
37112249	37112249	1	BEARING 6205-2RS (255215) SKF	
37112251	37112251	1	BEARING 6305-2RS (25x62x17)SKF	
37112256	37112256	1	BEARING 6305-2RS1C3(256217)SKF	
38111565	38111565	1	O-RING ORM 0180-30	
38112200	38112200	1	O-RING 3087 (22,00X2,62)	
51124134	51124134	1	HYDR.TRANSMISSION HOUSING	
51124619	51124619	1	PULLEY	
51124751	51124751	1	PULLEY	
51125652	51125652	1	SHAFT FLANGE	
51125655	51125655	1	PULLEY	
52494221	52494221	1	FLANGE	
56192105	56192105	1	SPACER	
56325937	56325937	1	ROD	

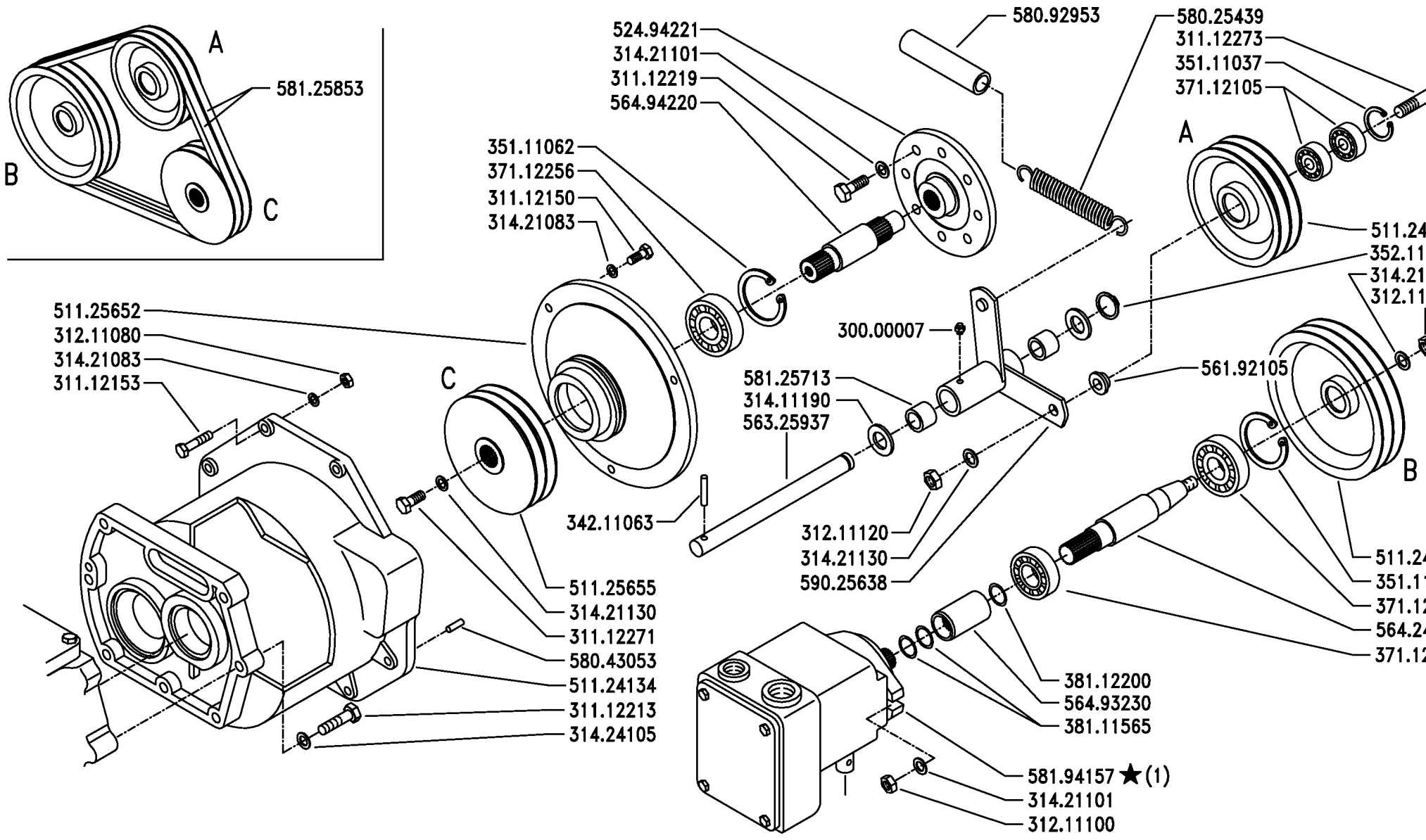

(1) sostituisce 581.35650

BCS	SERIE MA.TRA	TRASMISSIONE IDROSTATICA (MT103 -MT104 - MT205) HYDROSTATIC TRANSMISSION (MT103 – MT104 – MT205) CONNEXION HYDROSTATIQUE (MT103 – MT104 – MT205) TRANSMISIÓN HIDROSTÁTICA (MT103 – MT104 – MT205) HYDROSTATISCHES GETRIEBE (MT103 – MT104 – MT205)	DALLA MACCHINA DE LA MAQUINA DE LA MACHINE FROM THE MACHINE AB DER MASCHINE ★ N.	845892	E01 11/20

Pos.	Code	Q.ty	Description	Notes
56424750	56424750	1	CONTROL SHAFT	
56493230	56493230	1	SLEEVE 75mm	
56494220	56494220	1	TRANSMISSION SHAFT	
58025439	58025439	1	PULLEY GUIDE SPRING	
58043053	58043053	1	CYLINDRICAL PLUG	
58092953	58092953	1	RUBBER HOSE	
58125713	58125713	1	BUSHING	
58125853	58125853	1	V BELT	
58194157	58194157	1	PUMP	
59025638	59025638	1	PULLEY GUIDE	

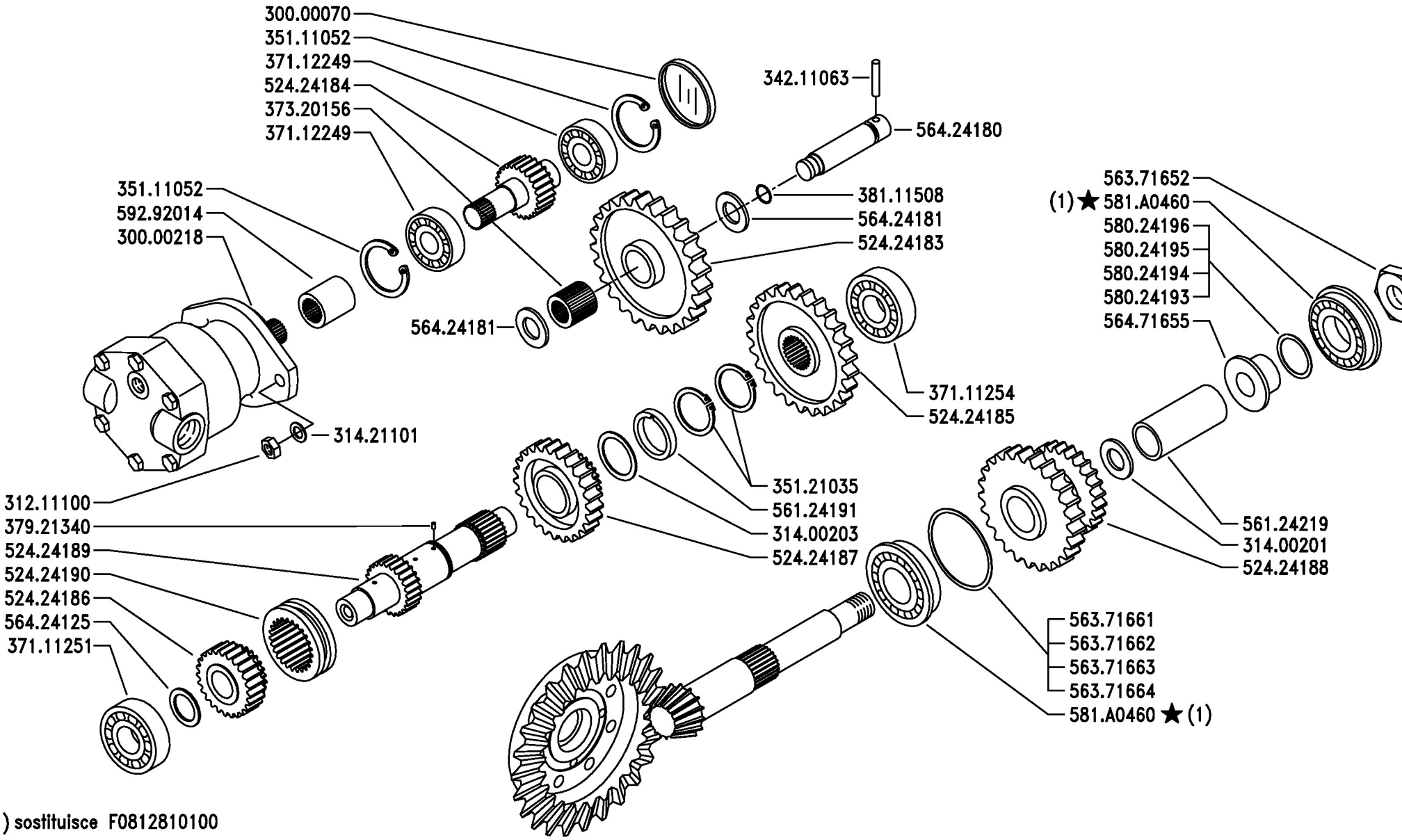

(1) sostituisce F0812810100

BCS	SERIE MA.TRA	INGRANAGGI CAMBIO (MT103 - MT104 - MT205) GEAR-CHANGE (MT103 - MT104 - MT205) ENGRENAGES DE CHANGEMENT DE VITESSE (MT103 - MT104 - MT205) ENGRANAJES DEL CAMBIO (MT103 - MT104 - MT205) WECHSEIRAD (MT103 - MT104 - MT205)	DALLA MACCHINA DE LA MAQUINA DE LA MACHINE FROM THE MACHINE AB DER MASCHINE ★ N.	AGGIORNAMENTO APLAZAMIENTO MISE A JOUR REVISION ANPASSUNG	F04 01/20

Pos.	Code	Q.ty	Description	Notes
30000070	30000070	1	SMALL CAP CC 52X6,5	
30000218	30000218	1	ENGINE	
31211100	31211100	1	NUT M10	
31400201	31400201	1	SHIM PS 28x40/2	
31400203	31400203	1	SHIM PS 35,0x45/1	
31421101	31421101	1	WASHER	
34211063	34211063	1	ROLL PIN	
35111052	35111052	1	SEEGER RING I 52 DIN 472	
35121035	35121035	1	SEEGER RING E 32 DIN 471	
37111251	37111251	1	BEARING 6305 (25X62X17)	
37111254	37111254	1	BEARING 6305 (25X62X17) SKF	
37112249	37112249	1	BEARING 6205-2RS (255215) SKF	
37320156	37320156	1	ROLLER CAGE 20X30/30	
37921340	37921340	1	ROLLER	
38111508	38111508	1	O-RING 119 (15,08x2,62)	
52424183	52424183	1	GEAR	
52424184	52424184	1	GEAR	
52424185	52424185	1	DRIVEN GEAR	
52424186	52424186	1	GEAR	
52424187	52424187	1	GEAR	
52424188	52424188	1	GEAR	
52424189	52424189	1	OUTPUT SHAFT	
52424190	52424190	1	SLIDING SLEEVE	
56124191	56124191	1	SPACER	
56124219	56124219	1	SPACER	
56371652	56371652	1	NUT	
56371661	56371661	1	ADJUSTING RING	
56371662	56371662	1	ADJUSTING RING	
56371663	56371663	1	ADJUSTING RING	
56371664	56371664	1	ADJUSTING RING	
56424125	56424125	1	THRUST PLATE	
56424180	56424180	1	PIN	
56424181	56424181	1	THRUST PLATE	
56471655	56471655	1	BUSHING	

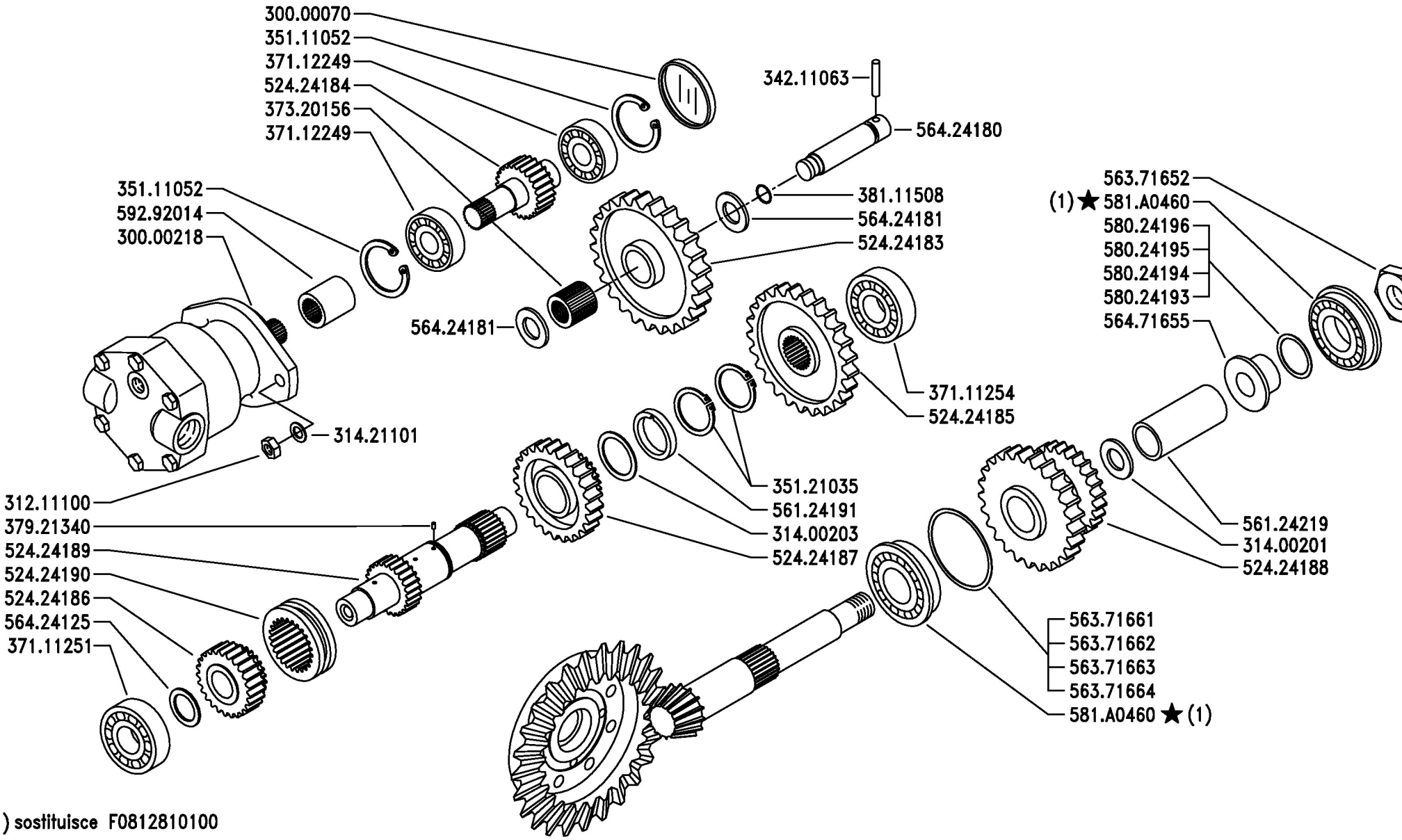

(1) sostituisce F0812810100

BCS	SERIE MA.TRA	INGRANAGGI CAMBIO (MT103 - MT104 - MT205) GEAR-CHANGE (MT103 - MT104 - MT205) ENGRENAGES DE CHANGEMENT DE VITESSE (MT103 - MT104 - MT205) ENGRANAJES DEL CAMBIO (MT103 - MT104 - MT205) WECHSEIRAD (MT103 - MT104 - MT205)	DALLA MACCHINA DE LA MAQUINA DE LA MACHINE FROM THE MACHINE AB DER MASCHINE ★ N.	AGGIORNAMENTO APLAZAMIENTO MISE A JOUR REVISION ANPASSUNG	F04 01/20

Pos.	Code	Q.ty	Description	Notes
58024193	58024193	1	SHIM	
58024194	58024194	1	SHIM	
58024195	58024195	1	SHIM	
58024196	58024196	1	SHIM	
581A0460	581A0460	1	BEARING	
59292014	59292014	1	SLEEVE	

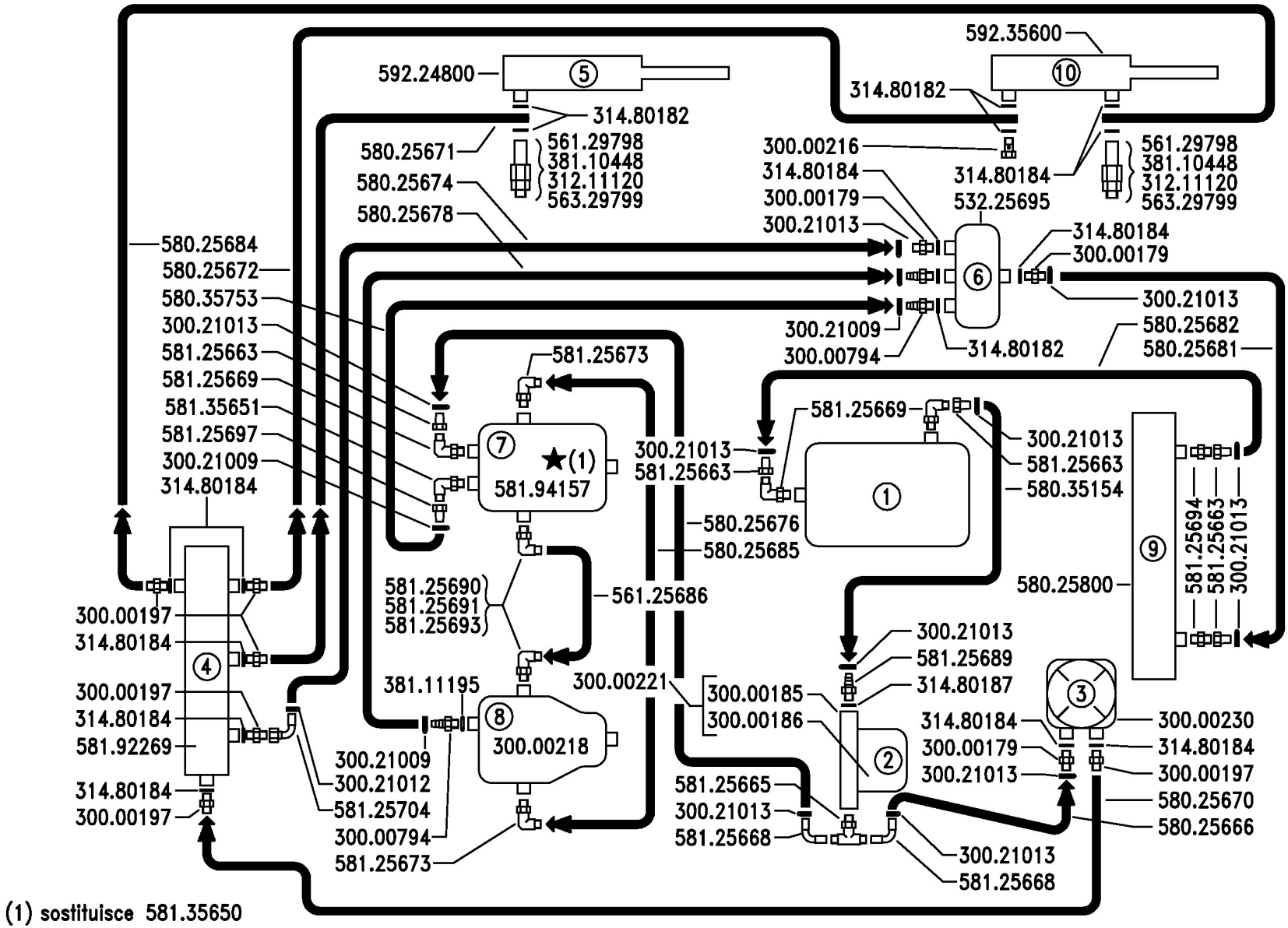

①SCATOLA CAMBIO
CAJA DE CAMBIOS
BOÎTE DE CHANGEMENT DE VITESSE
GEAR BOX
GETRIEBEGEHÄUSE

②FILTRO OLIO
FILTRO DEL ACEITE
FILTRE DE L'HUILE
OIL FILTER
ÖLFILTER

③POMPA
BOMBA
POMPE HYDRAULIQUE
HYDRAULIC PUMP
HYDROPUMPE

④DISTRIBUTORE
DISTRIBUIDOR
DISTRIBUTEUR
DISTRIBUTOR
VERTEILER

⑤ CILINDRO SOLLEV. ANTER
CILINDRO DE IZADO DELANTERO
CYLINDRE DE SOULÈVEMENT ANTÉRIEUR
FRONT RAISER CYLINDER
HUBZYLINDER

⑥RECUPERATORE
PILA DE RECUPERACIÓN
CUVE DE RÉCUPÉRATION
RECOVERY CARTER
AUSGLEICHSBEHÄLTER

⑦POMPA IDROSTATICA
BOMBA HIDROSTÁTICA
POMPE HYDROSTATIQUE
HYDROSTATIC PUMP
HYDROSTATICHE PUMPE

⑧MOTORE IDRAULICO
MOTOR HIDRÁULICO
MOTEUR HYDRAULIQUE
HYDRAULIC MOTOR
HYDROMOTOR

⑨RADIATORE OLIO
RADIATOR DEL ACEITE
RADIATEUR HUILE
OIL RADIATOR
ÖLKÜHLER

⑩CILINDRO RIBALTAMENTO CES
CILINDRO DE VUELCO DEL CESTO
CYLINDRE DE BASCULEMENT DU RÉSERVO
COLLECTOR FLIP BACK CYLINDER
KLAPPZLINDER KORB

BCS	SERIE MA.TRA	SCHEMA IMPIANTO IDRAULICO (MT104) HYDRAULIC LAYOUT DIAGRAM (MT104) SCHÉMA DE L'INSTALLATION HYDRAULIQUE (MT104) ESQUEMA DE LA INSTALACIÓN HIDRÁULICA (MT104) HYDRAULIKPLAN (MT104)	DALLA MACCHINA DE LA MAQUINA DE LA MACHINE FROM THE MACHINE AB DER MASCHINE ★N.	845892	R04 11/20

Pos.	Code	Q.ty	Description	Notes
30000179	30000179	1	NIPPLE P.3/8 DIN13	
30000185	30000185	1	HEAD	
30000186	30000186	1	CARTOUCHE	
30000197	30000197	1	NIPPLE	
30000216	30000216	1	SCREW M14X1,5	
30000218	30000218	1	ENGINE	
30000221	30000221	1	OIL FILTER CARTRIDGE	
30000230	30000230	1	PUMP	
30000794	30000794	1	GASKET HOLDER M JIC 9/16-18-DN10	
30021009	30021009	1	CLAMP 10/16-9	
30021012	30021012	1	CLAMP 12-22 INOX	
30021013	30021013	1	CLAMP 13-24 INOX	
31211120	31211120	1	NUT M12 UNI 5588 6S	
31480182	31480182	1	COPPER WASHER 14	
31480184	31480184	1	COPPER WASHER 16,7x22/1,5	
31480187	31480187	1	COPPER WASHER 26,7x32,5/1,5	
38110448	38110448	1	O-RING OR 2018 (4,48X1,78)	
38111195	38111195	1	O-RING 0120-20 (12X2)	
53225695	53225695	1	RETRIVER	
56125686	56125686	1	PIPE	
56129798	56129798	1	PIPE FITTING	
56329799	56329799	1	ADJUSTING SCREW	
58025666	58025666	1	PIPE	
58025670	58025670	1	PIPE	
58025671	58025671	1	DISTRIBUTING PIPE	
58025672	58025672	1	DISTRIBUTING PIPE	
58025674	58025674	1	PIPE	
58025676	58025676	1	SUCTION PIPE	
58025678	58025678	1	RETURN PIPE	
58025681	58025681	1	OIL PIPE	
58025682	58025682	1	PIPE	
58025684	58025684	1	PIPE	
58025685	58025685	1	PIPE	
58025800	58025800	1	OIL COOLER	

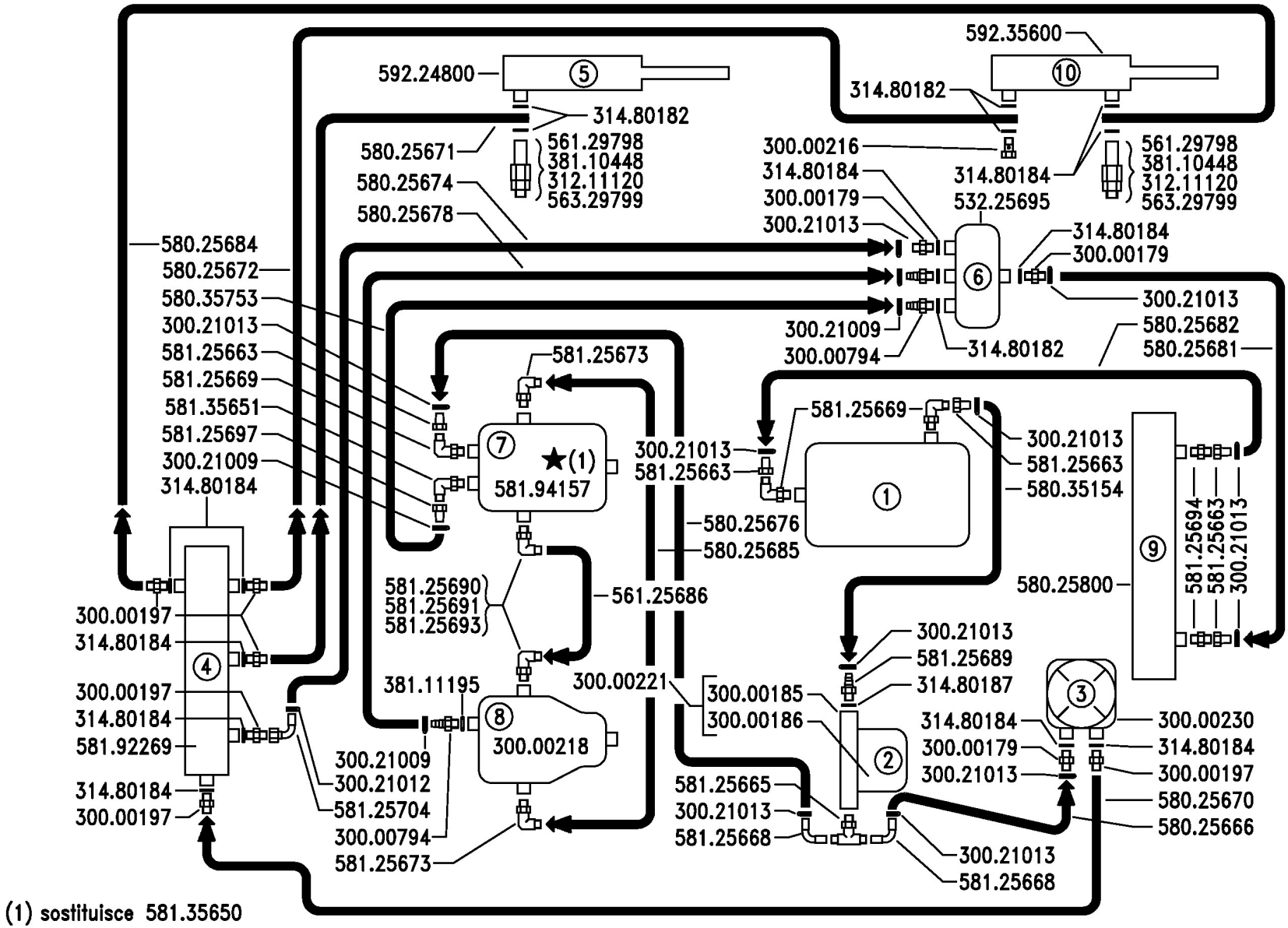

①SCATOLA CAMBIO
CAJA DE CAMBIOS
BOÎTE DE CHANGEMENT DE VITESSE
GEAR BOX
GETRIEBEGEHÄUSE

②FILTRO OLIO
FILTRO DEL ACEITE
FILTRE DE L'HUILE
OIL FILTER
ÖLFILTER

③POMPA
BOMBA
POMPE HYDRAULIQUE
HYDRAULIC PUMP
HYDROPUMPE

④DISTRIBUTORE
DISTRIBUIDOR
DISTRIBUTEUR
DISTRIBUTOR
VERTEILER

⑤ CILINDRO SOLLEV. ANTER
CILINDRO DE IZADO DELANTERO
CYLINDRE DE SOULÈVEMENT ANTÉRIEUR
FRONT RAISER CYLINDER
HUBZYLINDER

⑥RECUPERATORE
PILA DE RECUPERACIÓN
CUVE DE RÉCUPÉRATION
RECOVERY CARTER
AUSGLEICHSBEHÄLTER

⑦POMPA IDROSTATICA
BOMBA HIDROSTÁTICA
POMPE HYDROSTATIQUE
HYDROSTATIC PUMP
HYDROSTATICHE PUMPE

⑧MOTORE IDRAULICO
MOTOR HIDRÁULICO
MOTEUR HYDRAULIQUE
HYDRAULIC MOTOR
HYDROMOTOR

⑨RADIATORE OLIO
RADIATOR DEL ACEITE
RADIATEUR HUILE
OIL RADIATOR
ÖLKÜHLER

⑩CILINDRO RIBALTAMENTO CES
CILINDRO DE VUELCO DEL CESTO
CYLINDRE DE BASCULEMENT DU RÉSERVO
COLLECTOR FLIP BACK CYLINDER
KLAPPZLINDER KORB

BCS	SERIE MA.TRA	SCHEMA IMPIANTO IDRAULICO (MT104) HYDRAULIC LAYOUT DIAGRAM (MT104) SCHÉMA DE L'INSTALLATION HYDRAULIQUE (MT104) ESQUEMA DE LA INSTALACIÓN HIDRÁULICA (MT104) HYDRAULIKPLAN (MT104)	DALLA MACCHINA DE LA MAQUINA DE LA MACHINE FROM THE MACHINE AB DER MASCHINE ★N.	845892	R04 11/20

Pos.	Code	Q.ty	Description	Notes
58035154	58035154	1	SUCTION PIPE	
58035753	58035753	1	RETURN PIPE	
58125663	58125663	1	PIPE FITTING	
58125665	58125665	1	PIPE FITTING	
58125668	58125668	1	AIR ELBOW	
58125669	58125669	1	PIPE FITTING	
58125673	58125673	1	PIPE FITTING	
58125689	58125689	1	NIPPLE	
58125690	58125690	1	PIPE FITTING	
58125691	58125691	1	NUT M30X2	
58125693	58125693	1	RING	
58125694	58125694	1	PIPE FITTING	
58125697	58125697	1	PIPE FITTING	
58125704	58125704	1	AIR ELBOW	
58135651	58135651	1	PIPE FITTING	
58192269	58192269	1	D.A. VALVE	
58194157	58194157	1	PUMP	
59224800	59224800	1	LIFTING CYLINDER	
59235600	59235600	1	CYLINDER	